R. H. PARKER.

GAUGE.

APPLICATION FILED NOV. 1, 1918.

1,436,354.

Patented Nov. 21, 1922.

Fig. 2.

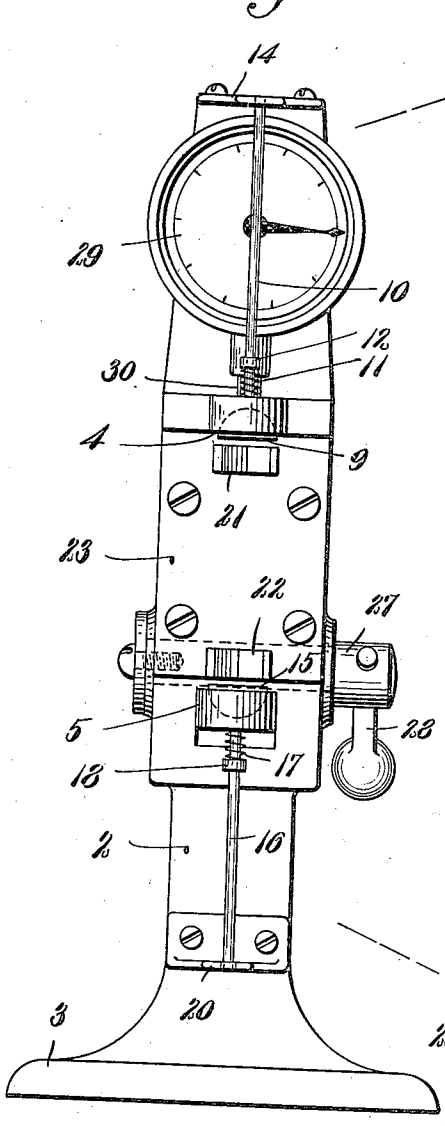

Fig. 1.

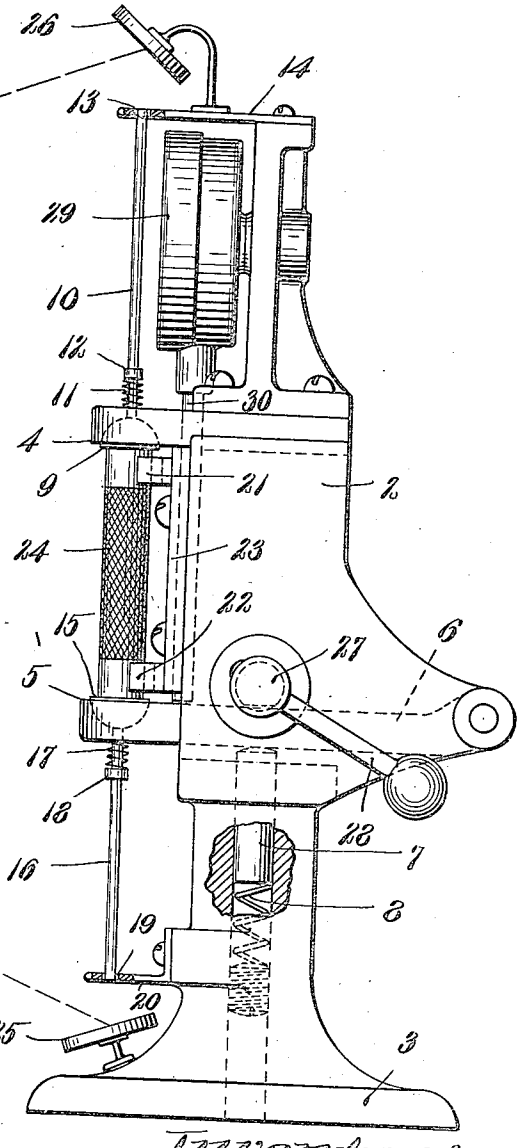

Inventor:
R. H. Parker,
by E. D. Chadwick, Atty.

Patented Nov. 21, 1922.

1,436,354

UNITED STATES PATENT OFFICE.

RILEY HERBERT PARKER, OF WINTHROP, MASSACHUSETTS, ASSIGNOR TO GILLETTE SAFETY RAZOR COMPANY, OF BOSTON, MASSACHUSETTS, A CORPORATION OF DELAWARE.

GAUGE.

Application filed November 1, 1918. Serial No. 260,680.

To all whom it may concern:

Be it known that I, RILEY HERBERT PARKER, a citizen of the United States, residing at Winthrop, in the county of Suffolk and State of Massachusetts, have invented certain new and useful Improvements in Gauges, of which the following is a specification.

My invention relates to gauges such as are used for measuring or testing the dimensions of structural parts, and is particularly intended to provide a simple, durable and easily-operated gauge for determining whether the ends of a tube, rod or the like are accurately perpendicular to its longitudinal axis. The features in which my invention resides are hereinafter described in connection with the accompanied drawing, in which:

Figure 1 is a side elevation of a device embodying my invention in its preferred form, with certain details shown in section, and

Figure 2 is a front elevation of the principal parts of the device shown in Figure 1.

The working parts of the device illustrated are carried by an upright frame 2 having a supporting base 3, and include two abutments 4 and 5 which project horizontally from the frame 2, one directly over the other, and are separated by a distance substantially corresponding to the length of the part to be tested. The abutment 4 is fixed with relation to the frame 2, while the abutment 5 is movable upward and downward and is shown as constituting the free end of a lever 6 which is pivoted at its rear or opposite end to the frame 2 and is pressed upward by a plunger 7 adapted to slide vertically in the lower portion of the frame and having a compression spring 8 beneath it.

In the under side of the fixed abutment 4 is formed a recess which receives and accurately fits a hemispherical head 9 having a flat bottom face and carrying a central upwardly-extending stem 10 which passes loosely through the abutment 4 and is surrounded by a spring 11 located between the abutment and a collar 12 on the stem, whereby the latter is constantly pressed upward and the head 9 is held in the recess. The upper end of the stem is located within a perforation 13 having a somewhat larger diameter than the stem and formed in a horizontal plate 14 fixed to the top of the frame 2. In like manner the upper side of the abutment 5 is provided with a recess which receives and fits another hemispherical head 15 having a flat top face and carrying a central downwardly-extending stem 16 which passes loosely through the abutment 5 and is surrounded by a spring 17 located between the abutment and a collar 18 on the stem, the lower end of which is located within a slightly larger perforation 19 formed in a horizontal plate 20 fixed to the frame 2 near its bottom. 21 and 22 indicate two V-shaped positioning jaws which are located one above the other at the rear of the space between the forwardly-projecting abutments 4 and 5 and are carried by a plate 23 secured to the frame 2 but detachable therefrom, so that the jaws can be removed and replaced by other jaws of different dimensions if desired.

The part to be tested, which is shown as consisting of a knurled tube 24, is placed vertically between the heads 9 and 15, where it is accurately positioned by the jaws 21 and 22, with the flat faces of said heads bearing on the ends of the tube and pressed against them by the action of the spring 8. Since these heads can turn in any direction in their respective recesses the position assumed by each head as a result of the pressure exerted by the spring 8 will be determined by the plane of the corresponding end of the part 24 and will be visibly indicated by the position of the free end of the stem carried by that head, and said heads and stems and the positioning jaws 21 and 22 are accurately formed and located in such manner that if the ends of the part 24 are exactly perpendicular to its longitudinal axis the longitudinal axes of the stems 10 and 16 will lie in a straight line passing through the centers of curvature of the heads and also through the centers of the perforations 13 and 19. Hence if either end of the part 24 is not exactly at right angles to its axis the free end of the stem carried by the corresponding head will be deflected laterally, so that by observing the position of the free end of either stem with respect to the perforation in which it is located it can be determined at a glance whether the corresponding end of the part tested is accurately perpendicular to its longitudinal axis. Each of the perforations

13 and 19 is preferably made of such size that if the free end of the corresponding stem is not deflected far enough to make contact with the periphery of the perforation the part being tested will not be so inaccurate as to be unfit for use, and consequently if such contact is found to exist it will indicate that the part being tested is unfit for use and should be discarded.

The position of the lower end of the stem 16 in the perforation 19 may be observed by the aid of a mirror 25 located beneath the perforation and held at such an angle that the image of the end of the stem will be readily visible to the observer. A similar mirror 26 may be employed in like manner for showing the position of the upper end of the stem 10 with respect to its perforation 13. These mirrors may be carried by the frame 2, as shown in Figure 1, or they may be kept separate from the other parts of the device and held in position by hand, in which case a single mirror will of course suffice. I prefer to employ two fixed mirrors as shown in Figure 1 for the reason that in such case the images in the two mirrors can be observed from the same point, which will be located at the intersection of the lines of sight represented in Figure 1 by the dotted lines leading from the mirrors.

The movable abutment 5 may be pressed downward by hand to permit the insertion or removal of the part 24, or this may be done by means of a transversely-extending rod 27 journalled in the frame 2 and provided at one end with an operating handle 28. Between its ends the rod 27 crosses the lever 6 and is cut away on one side directly above the lever, so that when the rod and handle are in the position shown in Figure 1 the lever is free to move upward under the pressure of the spring 8 until arrested by the lower end of the part 24, but when the handle 28 is moved from this position in either direction the rod 27 acts as a cam to force the lever downward.

In addition to testing the ends of a given part as above described the length of the part may be tested at the same time by including in the device an ordinary dial gauge and utilizing the lever 6 to operate the stem of said gauge. Such a gauge is shown at 29 in the drawing, and is preferably secured to the frame 2 near its upper end with the dial of the gauge facing forward, so that its reading can be readily observed. The stem 30 of the dial gauge extends downward into contact with the top of the lever 6, and in order that the distance between the heads 9 and 15 when pressed into contact with the ends of the part 24 may not be affected by the angle formed by either end of said part with its longitudinal axis, the jaws 21 and 22 are so shaped and located that said longitudinal axis coincides with the line passing through the centers of curvature of the heads. The result of this arrangement is that when the part 24 is clamped between the heads by the action of the spring 8 on the lever 6 said lever operates the dial gauge through its stem 30 and the reading of the gauge indicates the length of said part.

When used for comparing the length of the part to be tested with a predetermined standard it will usually be convenient to set or adjust the dial gauge so that when said part has exactly the standard length the reading of the gauge will be zero. Any inaccuracy in length will then be indicated as a plus or minus variation from the zero reading.

It will be evident that the device above described may be employed for testing one end only of a given part, in which case one of the heads 9 and 15 will be unnecessary, and that the dial gauge may be omitted in case the measurement provided for by this gauge is not required. Various means other than the stems attached to the heads may also be employed for indicating the position assumed by either of said heads in the use of the apparatus, if preferred, and the other details of construction of the device may be modified in various ways without departing from my invention, the general features of the device being capable of use for testing the angle formed by any given surface with any predetermined axis or dimension of the part to be operated upon.

I claim:—

1. In an apparatus of the character described, the combination of means for supporting the part to be operated upon, a head adapted to bear on said part and to move into a position determined by the surface on which it bears, means for holding the head in contact with said surface, and means for indicating the resulting position of the contacting surface of the head with reference to a predetermined plane.

2. In an apparatus of the character described, the combination of relatively-movable abutments adapted to receive between them the part to be operated upon, a head carried by one of the abutments and adapted to bear on said part, said head being movable into a position determined by the surface on which it bears, means for holding the head in contact with said surface, and means for indicating the resulting position of the contacting surface of the head with reference to a predetermined plane.

3. In an apparatus of the character described, the combination of an abutment, a hemispherical head capable of universal pivotal movement in a correspondingly-shaped recess formed in the abutment, means for pressing the head upon the part to be operated upon, a stem movable with the head, and means for visibly indicating the position

of the stem with reference to a predetermined point.

4. In an apparatus of the character described, the combination of an abutment, a hemispherical head capable of universal pivotal movement in a correspondingly-shaped recess formed in the abutment, means for pressing the head upon the part to be operated upon, a stem carried by the head and movable therewith to indicate the position assumed thereby, and a fixed plate having a perforation in which the free end of the stem is located and with reference to which its position is visible.

5. In an apparatus of the character described, the combination of two relatively-movable abutments, two heads carried by the respective abutments and adapted to receive between them the part to be operated upon, each head being capable of universal pivotal movement with respect to the corresponding abutment, means for pressing the heads into contact with said part, and means for indicating the resulting positions assumed by the contacting surfaces of the respective heads with reference to predetermined planes.

6. In an apparatus of the character described, the combination of two relatively-movable abutments, two heads carried by the respective abutments and adapted to receive between them the part to be operated upon, each head being capable of universal pivotal movement with respect to the corresponding abutment, means for pressing the heads into contact with said part, means for indicating the resulting positions assumed by the respective heads, and means for indicating the distance between the heads.

7. In an apparatus of the character described, the combination of two relatively-movable abutments, two hemispherical heads carried by the respective abutments with the flat faces of the heads opposed to each other and adapted to receive between them the part to be operated upon, each head being movable in a correspondingly-shaped recess formed in its abutment and provided with a central stem extending away from and at right angles to its flat face with the free end of each stem so located as to afford a visible indication of its position with reference to a predetermined fixed point, and means for pressing the heads into contact with the part located between them.

8. In an apparatus of the character described, the combination of two relatively-movable abutments, two hemispherical heads carried by the respective abutments with the flat faces of the heads opposed to each other and adapted to receive between them the part to be operated upon, each head being movable in a correspondingly-shaped recess formed in its abutment and provided with a central stem extending away from and at right angles to its flat face, means for pressing the heads into contact with the part located between them, and fixed plates each provided with a perforation in which the free end of the corresponding stem is located and with reference to which its position is visible.

9. In an apparatus of the character described, the combination of two relatively-movable abutments, two heads carried by the respective abutments and adapted to receive between them the part to be operated upon, each head being capable of universal pivotal movement with respect to the corresponding abutment and provided with a stem movable therewith, means for pressing the heads into contact with the part located between them, and two mirrors located in position to show at a predetermined point the images of the free ends of the stems.

10. In an apparatus of the character described, the combination of a fixed abutment and a movable abutment adapted to receive between them the part to be operated upon, a head carried by one of the abutments and adapted to bear on said part, said head being movable into a position determined by the surface on which it bears, a spring operating on the movable abutment for holding the head in contact with said surface, means for indicating the resulting position assumed by the head, and means operated by the movable abutment for indicating the distance between said head and the opposite surface of said part.

11. In an apparatus of the character described, the combination of a fixed abutment, an abutment movable toward and away from the fixed abutment, two heads carried by the respective abutments and adapted to receive between them the part to be operated upon, each head being capable of universal pivotal movement with respect to the corresponding abutment, a spring operating on the movable abutment for pressing the heads into contact with said part, means for indicating the resulting positions assumed by the respective heads, and a dial gauge operated by the movable abutment to indicate the distance between the heads.

Signed at Boston, Mass., this 29th day of October, 1918.

RILEY HERBERT PARKER.