May 16, 1933. C. F. HOVER 1,909,917

PITMAN ATTACHMENT

Filed Feb. 5, 1931

Fig. 1.

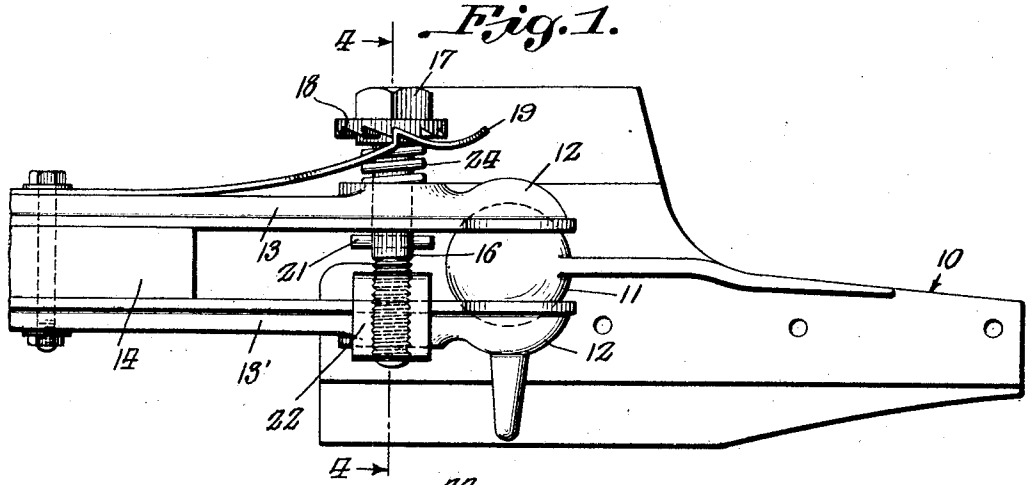

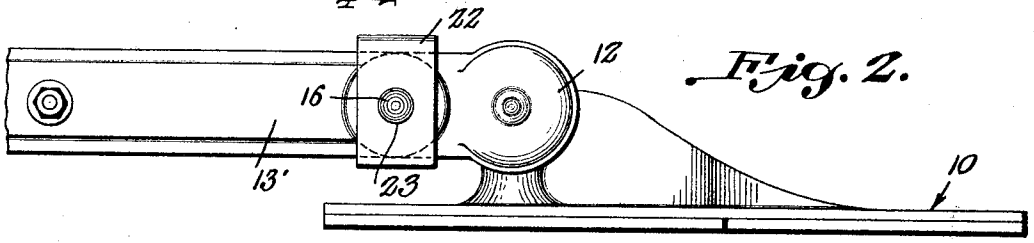

Fig. 2.

Fig. 3.

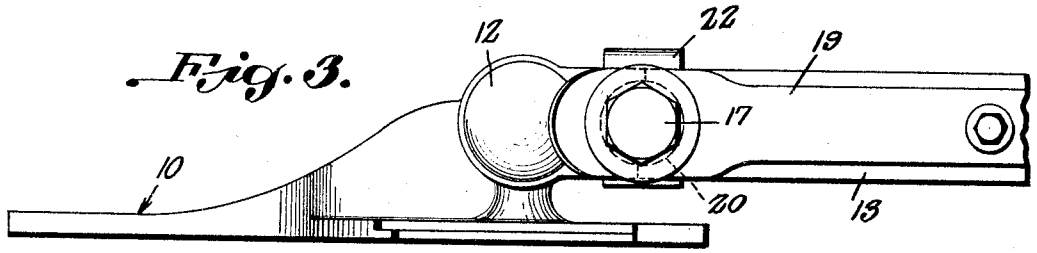

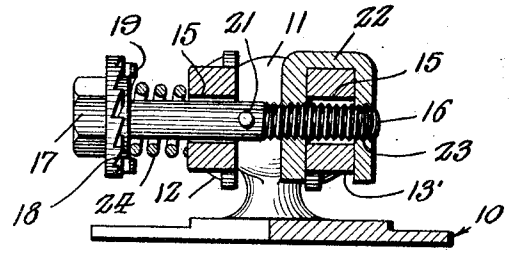

Fig. 4.

Inventor

C. F. Hover

By Horace C. Hundley

Attorney

Patented May 16, 1933 1,909,917

UNITED STATES PATENT OFFICE

CHARLES F. HOVER, OF CONRAD, MONTANA

PITMAN ATTACHMENT

Application filed February 5, 1931. Serial No. 513,742.

This invention relates to new and useful improvements in devices for holding the pitmen in proper engagement with the sickle bar, of a mowing machine, or the like, and for detaching the same.

Heretofore, when it became necessary to detach the pitman from the sickle bar, the operator removed a nut from the clamping bolt, and then employed a special tool for springing the pitman socket arms apart, so that the pitman could be readily lifted from the bar. Unless the tool remains in position between the spring arms, it becomes necessary to spread the arms again, with the tool, when the pitman is to be replaced. This tool often becomes dislodged from between the arms, and in the event that the tool has been lost or mislaid, the operator experiences great difficulty in spreading the spring arms, causing him to resort to various unsatisfactory makeshift devices to accomplish the desired result.

One object of the present invention is to provide a device of novel construction for clamping the spring arms into engagement with the ball of the sickle bar, whereby to maintain proper engagement therebetween, and to compensate for the wear of the parts.

Another object is to provide a clamping device of this character which is also capable of use to spread the spring arms of the pitman, whereby to permit easy and quick detachment of the pitman from the sickle bar, without the use of special tools, and to hold said arms in spread condition, while applying and removing the pitman.

A further object is to provide a device of this character which is readily attachable to the ordinary pitman, without the necessity of threading the openings in the spring arms of the pitman, or otherwise altering the common construction of the cutting mechanism.

Other objects and advantages will be apparent from the following description when taken in connection with the accompanying drawing.

In the drawing:

Figure 1 is a top plan view of a portion of the pitman and cutter bar, of a mowing machine cutting mechanism, showing the application of the present invention.

Figure 2 is a side elevation of the same.

Figure 3 is a side elevation of the same, viewed from the side opposite to that of Figure 2.

Figure 4 is a vertical transverse sectional view on the line 4—4 of Figure 1.

Referring particularly to the accompanying drawing, 10 represents a portion of the knife carrying bar of the cutting mechanism of a mowing machine, which has the raised ball member 11, received within the sockets 12, of the spring arms 13, of the pitman 14. Through each of the spring arms 13 is an opening 15, for the reception of the clamping bolt 16, such openings being unthreaded. This bolt is provided with a head 17, the inner face of which is formed with the ratchet teeth 18, for engagement with the leaf spring 19, carried by and extending longitudinally of the side of the pitman 14, and having an opening 20, through which the said bolt 16 is passed, before entering the opening of the spring-carrying spring arm. Disposed through the bolt 16, inwardly of the spring-carrying arm of the pitman, is a pin 21, which is adapted to bear against said arm, as will be more clearly explained later herein. In order to distinguish between the spring arms of the pitman, the spring-carrying arm will be referred to as 13, while the other arm will be referred to as 13′. Disposed in straddling relation on the arm 13′ is a yoke 22, the inner arm of which is of considerably greater thickness than the outer arm, and in these arms of the yoke are threaded openings 23, through which the bolt is threaded, said bolt also passing through the opening of the arm 13′. Engaged on the bolt, between the arm 13 and the head of the bolt, is a coil spring 24, which, when the bolt is properly set up, to clamp the pitman on the cutter bar, will automatically take up any wear between the spring arms and the ball of the cutter bar, whereby to maintain the proper engagement therebetween.

In applying the device to the ordinary pitman, the operator removes the pin 21, inserts the bolt in the opening of the arm 13, places

the yoke 22 in straddling relation to the arm 13′, with its threaded openings in alinement with the opening of the arm, and then screws the bolt through the openings of the yoke, so that said bolt also passes through the opening of the arm 13′. He then inserts the pin 21 in the transverse opening of the bolt. The operator then engages the sockets of the spring arms with the opposite sides of the ball 11, and turns the bolt so as to force the arms into firm contact with said ball, while at the same time permitting enough play to permit the proper operation of the parts. The effect of the coil spring 24 serves to maintain the proper frictional contact of the sockets with the ball.

When it is desired to disengage the pitman from the cutter bar, the operator presses the leaf spring 19 out of engagement with the teeth of the head of the bolt, and rotates the bolt in a retrograde direction, which causes the springing of the arms 13 and 13′ away from each other, by reason of the engagement of the pin 21, with the arm 13, and the pressure of the thicker arm of the yoke 22, against the inner face of the arm 13′. The rotation of the bolt is continued until the spring arms 13 and 13′ are separated sufficiently to permit the pitman to be easily lifted from the ball of the cutter bar.

In some devices, heretofore, for spreading the arms of the pitman, it was found necessary to thread the opening of one or both of the said arms, to be engaged by the threads of the bolt, but this necessitated the formation of such threads, at the time of the manufacture of the pitman, or required the farmer to take his pitman to a shop to have the threads formed in such openings. With the present device, this is unnecessary, as it is adapted to be applied to the ordinary pitman, without any modifications or changes, whatever, the farmer being able to purchase the complete device, take it home, and apply it to his pitman, without any special tools, other than a wrench and a pair of pliers. If the device should become broken, and the farmer be unable to obtain a new one at once, he can use the bolt which came with the machine, until the new device, of the present invention is received.

What is claimed is:

1. A device for flexing the apertured spring arms of the pitman of a mowing machine cutting mechanism into and out of clamping engagement with the ball member of the cutter bar thereof, comprising a bolt adapted to be slidably disposed through said arms, a head on the bolt, resilient means between the head and one face of one of said arms, means on the bolt adapted to engage the other face of said arm, and a yoke adapted to straddle the other of said arms and having threaded openings alining with the aperture of the straddled arm and receiving said bolt threadedly therethrough, the arms of said yoke being adapted to alternately engage said arm upon rotation of said bolts.

2. A device for manipulating the spring arms of the pitman of a mowing machine into and out of clamping engagement with the ball member of the cutter bar thereof comprising a bolt adapted to be slidably disposed through said arms, a head on the bolt, resilient means between said head and the outer face of one of said arms, rigid means carried by the bolt adapted to engage the inner face of said arm, and means on said bolt adapted to embrace the other arm whereby, upon rotation of said bolt in one direction said arms will be simultaneously flexed into clamping engagement with said ball member, and upon rotation of said bolt in the opposite direction said arms will be simultaneously and positively flexed out of clamping engagement and held in such position.

In testimony whereof, I affix my signature.

CHARLES F. HOVER.