(12) INTERNATIONAL APPLICATION PUBLISHED UNDER THE PATENT COOPERATION TREATY (PCT)

(19) World Intellectual Property Organization
International Bureau

(43) International Publication Date
16 February 2012 (16.02.2012)

PCT

(10) International Publication Number
WO 2012/020263 A1

(51) International Patent Classification:
G07D 7/20 (2006.01)

(21) International Application Number:
PCT/GB2011/051517

(22) International Filing Date:
11 August 2011 (11.08.2011)

(25) Filing Language: English

(26) Publication Language: English

(30) Priority Data:
1013432.8 11 August 2010 (11.08.2010) GB

(71) Applicant *(for all designated States except US)*: **THE UNIVERSITY OF BRISTOL**; Senate House, Tyndall Avenue, Bristol Bristol BS8 1TH (GB).

(72) Inventors; and

(75) Inventors/Applicants *(for US only)*: **BURGHARDT, Tilo** [DE/GB]; Flat 3, 3 Vyvyan Terrace, Bristol Bristol BS8 3DF (GB). **BARHAM, Peter, John** [GB/GB]; Flat 2, Cotham Place, Trelawney Road, Bristol Bristol BS6 6QS (GB).

(74) Agent: **WITHERS & ROGERS LLP**; 4 More London Riverside, London SE1 2AU (GB).

(81) Designated States *(unless otherwise indicated, for every kind of national protection available)*: AE, AG, AL, AM, AO, AT, AU, AZ, BA, BB, BG, BH, BR, BW, BY, BZ, CA, CH, CL, CN, CO, CR, CU, CZ, DE, DK, DM, DO, DZ, EC, EE, EG, ES, FI, GB, GD, GE, GH, GM, GT, HN, HR, HU, ID, IL, IN, IS, JP, KE, KG, KM, KN, KP, KR, KZ, LA, LC, LK, LR, LS, LT, LU, LY, MA, MD, ME, MG, MK, MN, MW, MX, MY, MZ, NA, NG, NI, NO, NZ, OM, PE, PG, PH, PL, PT, QA, RO, RS, RU, SC, SD, SE, SG, SK, SL, SM, ST, SV, SY, TH, TJ, TM, TN, TR, TT, TZ, UA, UG, US, UZ, VC, VN, ZA, ZM, ZW.

(84) Designated States *(unless otherwise indicated, for every kind of regional protection available)*: ARIPO (BW, GH, GM, KE, LR, LS, MW, MZ, NA, SD, SL, SZ, TZ, UG, ZM, ZW), Eurasian (AM, AZ, BY, KG, KZ, MD, RU, TJ, TM), European (AL, AT, BE, BG, CH, CY, CZ, DE, DK, EE, ES, FI, FR, GB, GR, HR, HU, IE, IS, IT, LT, LU, LV, MC, MK, MT, NL, NO, PL, PT, RO, RS, SE, SI, SK, SM, TR), OAPI (BF, BJ, CF, CG, CI, CM, GA, GN, GQ, GW, ML, MR, NE, SN, TD, TG).

Published:

— *with international search report (Art. 21(3))*

(54) **Title**: METHOD OF AUTHENTICATION

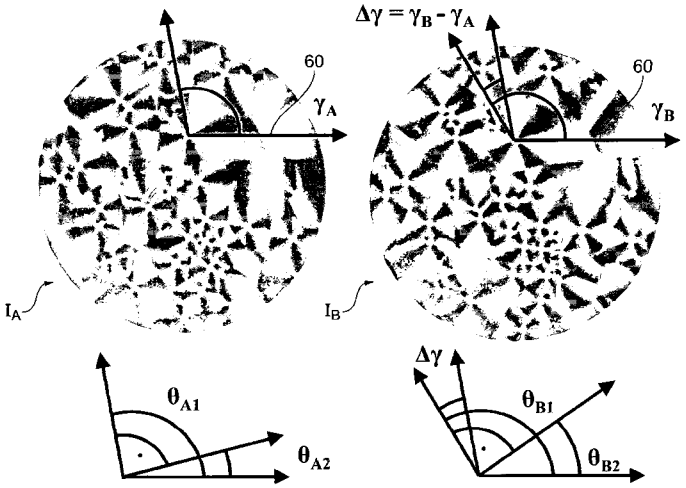

FIG. 7

(57) **Abstract**: A method for the authentication of a solid crystalline film is described. The polymer film is crystallised under conditions such that randomly nucleated spherulites are formed which can only be observed under polarised light illumination. The unique birefringent features of the film are established by irradiating the film with polarised light of a known state and viewing the film through an analyser of known polarisation properties. One or more images of the film can be obtained by a camera or equivalent sensor by changing the polarisation of the irradiating light or the analyser orientation, or both. A material check is undertaken to ensure that the film has the expected birefringent properties and is not counterfeit. An identity check is performed by measuring the unique pattern formed by the spherulites and comparing the measured pattern with stored data.

WO 2012/020263 A1

METHOD OF AUTHENTICATION

FIELD OF THE INVENTION

The present invention relates to a method and apparatus for the authentication of a solid crystalline birefringent film.

BACKGROUND OF THE INVENTION

There is strong interest in identification technology due to the rapidly increasing incidence of fraud and counterfeiting. There is a need to authenticate reliably personal documents such as passports as well as ATM cards and other commercial instruments. There is also a need to protect against product counterfeiting and piracy in many areas from entertainment to vehicle spare parts to pharmacology and healthcare.

There are several approaches to product authentication:

(i) authentication based on properties that are inherent to the product itself, based on unique features;

(ii) authentication based on security features incorporated into a product via the application of a tag for example;

(iii) historical data or tracing information;

(iv) cryptography;

(v) combinations of the above.

Modern digital black box cryptography offers secure algorithms and protocols which are reasonably well understood. However, the black box itself may be vulnerable to attack using for example power analysis techniques. Furthermore, secure digital devices, while cheap, may not be cheap enough for all. Thus, there is a need for a low cost and reliable authentication system applicable to physical objects that need to be verified.

Physical Unclonable Functions (PUFs) are complex physical systems designed such that they interact in a complicated way with stimuli which lead to easily measurable, yet practically hard-to-duplicate responses. A PUF could fall into categories (i) or (ii) above. While PUFs are physical entities, they also provide behaviour similar to a cryptographic hash function where the underlying physical system, consisting of many

random components, represents the hash key. It should be difficult, if not impossible, to produce a physical copy of a PUF because of randomness inherent to the process of material formation and, provided the physical interaction with the stimuli is sufficiently complex, it would not be possible to reproduce its behaviour when challenged.

PUFs can, for instance, be embodied in silicon circuitry as natural manufacturing processes lead to random fluctuations in circuit functions which can allow authentication. PUFs may, for example, also be optical materials that scatter light coherently, or magnetic materials with randomly orientated magnetic domains. PUF systems may be interrogated by stimuli that are optical, magnetic, electromagnetic, digital, or acoustic in nature.

SUMMARY OF THE INVENTION

A first aspect of the invention provides a method according to claim 1. A second aspect of the invention provides apparatus according to claim 13.

The invention provides a method and apparatus for verifying the authenticity of solid crystalline birefringent materials. In a preferred embodiment a solid crystalline birefringent film (for instance in the form of a tag) is provided in combination with a probing setup for polarisation-sensitive imaging of this film under various, controlled optical conditions using polarised light, plus supporting technology based on computer image analysis.

Birefringent materials rotate the polarisation of the light that is incident upon them. Crystalline films of solid birefringent materials exhibit a structure of varying polarization properties over the spatial extent of their surface area. The invention recognises that when polarisation conditions are altered, this pattern changes in a predictable way forming a characteristic signature for the material. Because polarisation features arise from crystal-inherent phase modulations of the light, it is not possible to reconstruct the material properties that give rise to them.

This signature is used as an optical PUF. It contains appropriate complexity and randomness to serve as an identifier for individual pieces of crystalline film. It also contains features characteristic to the material class. Thus, it supports authentication of a tag as well as a confirmative check of the polarisation properties of the tag's

material, which prevents other materials being used as a counterfeit. By employing invariance features of the PUF for the material check, the procedures do not rely on secret measurement parameters (e.g. imaging angles). All information about the material and measurement process can be public eliminating the possibility of weakening the PUF system by theft of information.

Many materials are birefringent and suitable for use as the solid crystalline birefringent film, including a class of commercially important polymers which are cheap and readily available. These polymers can be crystallised into thin, optically transparent sheets. Crystallisation takes place via nucleation around randomly located centres resulting in an array of spherulitic domains. The size of these domains and the density of nucleation points can be controlled by the choice of material and the conditions of crystallisation. The domains are birefringent, so although they cannot be seen under normal illumination they are revealed when viewed between crossed polarisers and a modest lens.

The unique pattern formed by the spherulites may be measured in any way, for example by analysing a third image generated under a third set of optical conditions. However more preferably it is measured by analysing the first image and/or the second image, for instance to generate data which indicates the distribution of spherulite centers in the image. This data can then be compared with the stored identity data to check the identity of the film.

In a less preferred embodiment of the present invention, only the first polarization angle is changed to θ_{B1} or only the second polarization angle is changed to θ_{B2}. However more preferably both angles are changed to generate the second set of optical conditions. The two angles may be changed by different amounts, but more preferably they are changed by the same amount so that $\theta_{A1} - \theta_{B1} = \theta_{A2} - \theta_{B2}$ and step b.v. comprises checking that the change between γ_A and γ_B from the first to the second image is consistent with the change in the first polarization angle from θ_{A1} to θ_{B1} and the second polarization angle from θ_{A2} to θ_{B2}.

Most preferably the absolute values of $\theta_{A1} - \theta_{A2}$ and $\theta_{B1} - \theta_{B2}$ are approximately equal to 90°, although other angles may be used.

Preferably step b.v. comprises checking that the absolute value of $(\theta_A - \theta_B) - (\gamma_A - \gamma_B)$ is greater than a threshold.

Typically the identity check is performed in step a. by measuring the unique pattern formed by the spherulites to generate a profile, and checking that the profile corresponds with a stored profile. This reduces the storage requirement since the amount of data required to store the profile is less than the amount of data to store the image. In a preferred embodiment of the invention, an effective way of processing these images is provided so that the nucleation site features can be extracted and a compact and characteristic profile can be generated for the PUF.

Typically the material check further comprises analysing the first image to generate data C_A which indicate the distribution of spherulite centers in the first image; analysing the second image to generate data C_B which indicate the distribution of spherulite centers in the second image; and checking that C_A corresponds with C_B (for instance by checking that Procrustes(C_A,C_B) is less than a threshold).

Typically the material check further comprises analysing each image to check that the angles of the arms of the crosses for that image are substantially consistent over the entire image, for instance by checking that the standard deviation of the angles is less than a threshold.

Typically the angles γ_A and γ_B are calculated by measuring the angles α for each of the individual crosses in the images, and calculating the mean values of α per image.

Typically an output is generated (such as a visual display or similar) in accordance with the results of the identify check and the material check.

Typically the illumination system comprises a light source and a polarising filter arranged to polarize light from the light source at a first polarization angle θ_1 relative to an imaginary line in the plane of the film.

BRIEF DESCRIPTION OF THE DRAWINGS

Embodiments of the invention will now be described with reference to the accompanying drawings, in which:

Figure 1 illustrates a typical batch process method using a hot press to produce a solid crystalline birefringent film based on polymers;

Figure 2 illustrates a typical process to produce a suitable polymer film in a continuous manner;

Figure 3 illustrates two arrangements of fundamental cores of image reading devices;

Figure 4 shows a detailed example arrangement of a reading device;

Figure 5 shows a detailed example of the reading device integrated in an operational environment suitable for practical authentication of tags;

Figure 6 shows some examples of images taken of a solid crystalline birefringent film;

Figure 7 is a visualisation of the material-specific angular alignment in images of the crystalline film;

Figure 8 shows examples of images taken from PEO spherulitic polymer films;

Figure 9 is a visualisation of the two defining local properties (radial uniformity and orbital oscillation) of a 'Maltese cross' pattern in a disc-shaped neighbourhood of radius r_{max} around a spherulite center (x_c, y_c); and

Figure 10 is an example of detected crystalline domain centres.

DETAILED DESCRIPTION OF EMBODIMENT(S)

Figures 1 and 2 outline two production processes for suitable solid crystalline birefringent film that bears a spherulitic structure. Production procedures are exemplified for two polymers, namely PEO poly(ethylene oxide) and PHB poly(hydroxybutyrate). However, other materials that form a solid birefringent film containing spherulitic crystals are also suitable materials for the approach. A similar production process can be used to form any polycrystalline birefringent film.

For poly(ethylene oxide), a PEO powder 1 is melted at a temperature between 100 and 120C between a pair of optically flat surfaces (for example in small scale production glass microscope slides 2 as in Figure 1 or in large scale production stainless steel rollers 3 as in Figure 2); pressed to remove air and reduce the thickness to ca. 0.05mm (typically 0.005 to 0.1mm); cooled to a temperature between 60 and 70°C and left to stand for about 5 to 10 minutes until crystallization is complete. The average spherulite diameter will be larger at higher crystallization temperatures. Varying the cystallization temperature will produce spherulites with diameters between 0.01 and 0.5mm.

In the example of Figure 1, the optically smooth platens 2 are mounted on heated plates 4. The polymer 1 is heated by the plates until molten and then pressure is applied (as indicated by the arrows 5) to close the plates 4 so that the molten polymer flows to form a coherent film. The pressure is then released and the plates with the polymer film removed and kept at the required crystallization temperature until the film has fully crystallized.

In the example of Figure 2, the polymer powder 1 is melted in a barrel or screw extruder 6 and fed through a slit dye to a pair of heated counter rotating rollers 3 which have optically smooth surfaces. The molten polymer film 7 is then fed into a temperature controlled crystallization chamber 8 before the solid film 9 is hauled off and finally wound onto a suitable rotor. The length of the temperature controlled crystallization chamber 8, overall rate of feeding the polymer and the speeds of the heated rollers 3 and haul off are adjusted to be such that the time the film is in the heated crystallization chamber is sufficient to permit full crystallization.

Finally, the film is cut into suitable sized and shaped pieces (e.g. squares of size in the range 1 to 10mm).

For poly(hydroxybutyrate) - PHB - the melting temperature should be raised to about 200°C and the crystallization temperature to 60 to 90°C and crystallization times between about 1 and 30 minutes. Longer crystallization times are required at the higher crystallization temperatures. The average spherulite diameter will be larger at higher crystallization temperatures. Varying the crystallization temperature will produce spherulites with diameters between 0.01 and 5mm.

Figures 3(a) and 3(c) illustrate two arrangements of fundamental cores of image reading devices using light transmission (Figure 3(a)) or reflection (Figure 3(c)). Figures 3(a) and 3(c) are side views showing the imaging apparatus, and Figures 3(b) and 3(d) are plan views of the rotatable polarization filters. The arrangements shown in Figures 3(a) and 3(c) can be used for both pattern registration and authentication.

In the case of Figure 3(a) a light source 10 generates diffuse light which is linearly polarised by a filter 11 (polariser) in an annular frame 12. The polarised light then traverses a slot 13 and is polarised by a filter 14 (analyser) in an annular frame 15. A camera and lens arrangement 16 then forms an image. A commercial webcam of

resolution above one megapixel with an additional, modest lens is suitable. The annular frames 12, 15 are rotatable together in the plane of the film as indicated by arrow 17.

In the case of Figure 3(c) an annular light source 20 generates diffuse light which is linearly polarised by an annular filter 21 (polariser) in an annular frame 22. The polarised light then traverses a gap 23 and is reflected back across the gap onto a polarizing filter 25 (analyser) in an annular frame 26. A camera and lens arrangement 27 then forms an image. The annular frames 22, 26 are rotatable together in the plane of the film as indicated by arrow 28.

A solid crystalline polymer film (the 'tag') comprising an array of spherulites can then be placed in the path of light between the polariser and the analyser. In the case of Figure 3(a) the tag is inserted into a slot 13 in the device (e.g. similar to a card reader). In the case of Figure 3(b) the reading device can be placed directly on top of the tag (e.g. a direct contact reader).

The angle of polarisation (as defined with respect to an arbitrary, but constant direction in the plane of the film) for both the polariser (θ_1) and the analyser (θ_2) is controlled in this example by mechanically rotating the polarising filters. In an alternative arrangement the angle can be controlled by electronic polarising filters.

To maximise image quality with respect to the measured properties, a fixed angle of 90 degrees between polariser and analyser is advisable, i.e. $\theta = \theta_2 = \theta_1 + \pi/2$. Without loss of generality, in the detailed discussion below we will assume such a setup in which the polariser and the analyser are rotated together.

An example design for a reader where the polariser and analyser are mechanically fixed at a right angle is given in Figure 4. The same reference numerals are used to indicate equivalent features from Figure 3(a). Both polarising filters 11 and 14 are fixed to a shaft 30 which is journalled in a housing 31 to allow for co-rotation at a fixed relative polarisation angle. A removable tag 32 containing solid crystalline film is shown inserted into the slot between the filters through light-tight fittings 33 preventing light from entering the reader. An actor unit 34, e.g. stepper motor, controls the rotational position of the filters.

Referring to Figure 5: the stepper motor 34 is controlled by a control input 35 from a control unit 37 such as a PC. Image data is output from the camera on a connector 36, e.g. a USB connector, to the PC 37.

For imaging, the control unit 37 triggers the formation of two or more images at polarisation angles θ_A and θ_B. The angles are chosen at random, yet different to maximise the complexity of the probed PUF.

Imaging involves the sequence of:

1) rotating the filters to the required position,

2) forming an image of the illuminated tag 32 using the camera system 16 controlled by the control unit 37, and

3) transmitting the image to the control unit 37.

The control unit communicates with the reading device using some standard bus system (e.g. via USB link). The reading device, the bus and the control unit (yet not the tag) form a trusted environment 38 shown in Figure 5 in dashed line.

The control device communicates with a tag database server 40 over a secure channel 41, and with the reader and a verifying party 45 via a control connection 46 (e.g. Universal Serial Bus (USB)).

The control device 37 runs various software modules including:

- an identity check module configured to perform an identity check by measuring the unique pattern formed by the spherulites to form a measured PUF profile, and submitting the measured PUF profile to the server 40 for verification by comparison with PUF profiles previously stored on the server 40; and
- a material check module configured to:
    1. operate the camera 16 to form a first image under a first set of optical conditions, the first image showing the spherulites with crosses emanating from their centres, two of the arms of the crosses being oriented at γ_A relative to an imaginary line in the plane of the film;
    2. operate the camera 16 to form a second image under a second set of optical conditions in which the first polarization angle θ_1 and the second polarization

angle θ_2 has changed, the second image showing the spherulites with crosses emanating from their centres, the arms of the crosses being oriented at γ_B relative to the imaginary line in the plane of the film, wherein γ_B in the second image is different to γ_A in the first image; and

3. check that the change between γ_A and γ_B from the first image to the second image is consistent with the change in the first polarization angle θ_1 and the second polarization angle θ_2.

The tag database server 40 links individual PUF profiles to tag IDs of issued tags, and is used to verify PUF profiles for received profile requests. The control device 37 transmits PUF profiles 42 requesting tag IDs to the server 40, and receives tag matching results 43, that is either a tag ID or a failure notice.

Figure 6 and Figure 8 illustrate sets of acquired images using this method. Images show the spherulites with crosses emanating from their centres. For an ideal crystal structure these crosses resemble 'Maltese crosses'. This pattern is characteristic of a structure which has radial symmetry. Since the individual micro crystallites of spherulites grow (approximately) radially from a nucleation point, this symmetry is present.

Figure 6 shows images taken of a solid crystalline birefringent film, specifically PHB spherulitic polymer film, photographed in unpolarized light (top row) and when rotated with respect to the polarisers between 0° and 70° in steps of 10 ° (left to right from middle to bottom row). Note the centres of the spherulites and their general shapes are invariant with respect to rotation, but the crystalline polarisation pattern ('Maltese cross') remains aligned along the polariser and analyser directions.

Figure 8 shows examples of images taken from PEO spherulitic polymer films in unpolarized light (top row) and when rotated with respect to the polarisers between 0° and 90° in steps of 30° (bottom row).

Both the check for the authenticity of the material and the individual piece of film are conducted based on the same set (one or more) of image pairs (I_A and I_B). However, by using local measurement information in the form of θ_1 and θ_2 a material check can be conducted by the control unit 37 without access to the tag database server 40. This increases efficient handling of counterfeited tags.

Details will now follow on how the resulting two 2D intensity images I_A and I_B taken at one or more suitable optical wavelengths can be employed:

(a) by the material check module for verifying the authenticity of the film material and
(b) by the identity check module for verifying the individual piece of film imaged.

A number of invariant image features hold for any two images I_A and I_B as shown in Figure 7 which shows the images I_A and I_B in the top part of the figure and the polariser directions and analyser directions on the bottom part of the figure all relative to an imaginary horizontal line 60 in the plane of the film.

Assume imaging under two parameterisations A (left) and B (right) of polarisation conditions determined by polariser directions θ_{A1} and θ_{B1}, as well as analyser directions θ_{A2} and θ_{B2}. The change of orientation of the crystal response pattern expressed by the orientation difference $\gamma_B - \gamma_A$ of Maltese crosses in the generated images is in accordance with the change between conditions A and B. Specifically, when fixing the relative angle (here: a right angle) between polariser and analyser, i.e. $\theta_{A1}-\theta_{A2} = \theta_{B1}-\theta_{B2}$, the condition $\gamma_B - \gamma_A = \theta_{B2} - \theta_{A2}$ will hold apart from small measurement errors.

All features can be observed in the two crystalline film images shown in Figure 7, namely:

(1) the number as well as the position of spherulite centers (i.e. the centers of 'Maltese crosses' denoted C_A and C_B, respectively) remain constant over different polarisation conditions despite changes of the image context; (The persistence of imaged center locations is characteristic for spherulite crystalline films. It can be used as a constraint for material authentication and can act as the basis for measuring orientations of Maltese crosses. The distribution of center locations is characteristic of an individual piece of film and can be used as part of a compact, characteristic code for individual tag authentication.)

(2) the subdivision of space into domains {D}, each containing a cross pattern emanating from the spherulite center, remains constant; (Its constancy is characteristic for spherulite crystalline films. It can be used as a further constraint for material authentication. The specific shape of this tessellation,

i.e. a Voronoi tessellation around the spherulite centers, is characteristic to an individual piece of film.)

(3) measurable given constancy of the location of spherulite centers (1) and associated domains (2), the change between an image wide consistent orientation of 'Maltese crosses' γ_A and γ_B from the first image to the second image is consistent with the change in the first polarization angle θ_1 and the second polarization angle θ_2 used in measurement. (This observation is a core property of the spherulite crystalline film material. It is the central property used for material authentication.)

There now follows an outline of a selection of specific image processing techniques suitable for evaluating the criteria above.

First, a method for the localisation of spherulite centers in any one of the intensity images I_A and I_B, (denoted as I) is outlined.

The method put forward infers the location of spherulite centers by integrating information from the surrounding local neighbourhood using a family of prototypical kernel functions and convolution. Essentially, for classifying an image location as 'spherulite center', the resemblance of its local image neighbourhood D with respect to a prototypical Maltese-cross structure is probed.

Note at this point that a local (direct) detection of spherulite centres without using a wider image context D is a weak approach, since important local features are theoretically undefined at spherulite centres (e.g. image intensity, gradient direction) and, when measured locally, highly susceptible to image noise.

Given a domain D, i.e. a neighbourhood of pixels around a center location (x_c, y_c) in the image, the 'Maltese cross' property of can be probed by the following two local appearance constraints:

(1) image intensity I(x,y) is (apart from imaging noise) constant along any radial axis emanating from (x_c, y_c) within the neighbourhood D;

(2) image intensity I(x,y) oscillates with a frequency of $\pi/2$ on circular orbits around the center (x_c, y_c) on radii $r = \sqrt{(x - x_c)^2 + (y - y_c)^2}$ within the neighbourhood D;

The division of the array into spherulite domains roughly follows a Voronoi tessellation. Thus, the above constraints will hold in an ideal crystal over the polygonal neighbourhood D of each of these domains. An approximation of domain areas by a disc-shaped neighbourhood around image locations (x_c, y_c) is suggested for simplification of calculations.

Figure 9 shows such a disc-shaped neighbourhood D and visualises the two constraints. Two arms of the cross are oriented at an angle α relative to an imaginary horizontal line in the plane of the film, the other two arms being oriented at α - 90°. The neighbourhood D can be formally defined as all orbits around (x_c, y_c) smaller than the disc radius r_{max}, forming as a set of locations D given by

$$D = \left\{(x, y) \in I \mid r_{max} > \sqrt{(x - x_c)^2 + (y - y_c)^2}\right\}$$

Probing for the validity of constraints in a close neighbourhood of a center can, for instance, be realised by incorporating the two constraints into a family of kernel functions that represent Maltese cross prototypes at different orientations. Figure 9 shows one such kernel. The image can be probed for spherulite centers by quantifying the degree of resemblance to the best matching prototype from this kernel set in a distance measure $d(x_c,y_c)$.

Defining $f(\beta) : (0, 2\pi) \rightarrow R$ to be an oscillation function mapping from a phase β to absolute intensity values (most commonly R = {0, .., 255} is an 8 bit measurement), a distance d can be defined as:

$$d(x_c, y_c) = \min_{0 \le v \le \pi/2} p(x_c, y_c, v)$$

where resemblance p to a prototype of orientation v can be quantified as

$$p(x_c, y_c, v) = \int_{r_{min}}^{r_{max}} \int_0^{2\pi} \left(f(\beta - v) - I(r\cos\beta + x_c, r\sin\beta + y_c)\right)^2 + \delta\beta\delta r$$

and the cross orientation can be extracted as

$$\alpha = \underset{0 \le v \le \pi/2}{\operatorname{argmin}}\ p(x_c, y_c, v)$$

A resolution-dependent threshold r_{min} is employed to avoid measuring areas containing resolution artefacts near the center location. Fast convolution in the Fourier domain can be used to evaluate d more quickly.

By evaluating this distance for every potential center pixel (x_c,y_c) of the image I and performing thresholding of the result, the set of prominent candidates for spherulite centers C can be extracted:

$$C = \{(x_c, y_c) \in I \mid d(x_c, y_c) < thr_d\}$$

Figure 10 visualises a result of the procedure after application to a spherulite array. The image on the left-hand side of Figure 10 is an image I_A and the image on the right-hand side of Figure 10 shows the image I_A annotated with circles 50 indicating the spherulite centers C_A calculated by the method described above.

Note that the orientations α of each of the detected 'Maltese crosses' is calculated during the computation of d. Since the orientation of all crosses in an image is constant, γ can be assembled as the mean over extracted orientations α:

$$\gamma = \operatorname{atan2}\left(\frac{1}{|C|}\sum_{\alpha \in C} \sin\alpha, \frac{1}{|C|}\sum_{\alpha \in C} \cos\alpha\right)$$

where |C| is the number of extracted spherulite centers.

Note that the robustness of the template matching approach to noise and degraded crystal structures can be increased by iteratively repeating the procedure in loops t = {1, 2, ...} , where the exact Voronoi tessellation around C_t is calculated after each loop t and used to define neighbourhoods D instead of disc-shaped approximations until $C_t = C_{t-1}$, where $C_0=\{\}$.

We will now describe the detailed method of material check. It is assumed that the spherulite array was filmed under two optical conditions specified by polarisation angles θ_A and θ_B to produce I_A and I_B and spherulite center sets C_A and C_B have been

extracted together with orientations α for each of the Maltese crosses and a globally mean orientation γ of crosses per image (in an ideal crystal $\gamma = \alpha$).

The check first probes that orientations α of Maltese crosses are globally consistent within each image and can, therefore, be represented meaningfully by global angles γ_A and γ_B in the first image and the second image, respectively. Practically, global consistency can be quantified by the standard deviation σ over all angles α of orientations of Maltese crosses in an image. If the standard deviation is larger than a threshold accounting for imaging noise, i.e. $\sigma > thr_\sigma$, the check fails. The check failing for I_A or I_B triggers a failure of the material check.

Secondly, the check probes for locations of Maltese crosses to be consistent between the images to ensure angles α are measured around consistent centers. It is tested if the distribution of spherulite centers C_A detected in I_A spatially coincides with the distribution of spherulite centers C_B detected in I_B. This alignment can be practically approximated by a bound over the Procrustes' distance (see: D. G. Kendall. Shape manifolds: Procrustean metrics and complex projective spaces. London, Mathematical Society, 16:81–121, 1984).

The check fails if:

$Procrustes(C_A,C_B) > thr_P$

Given angles are globally consistent and measured around consistent centers, it is finally tested that the angular change measured between cross orientations in I_A and I_B is consistent with the change from the first polarization angle θ_A to the second polarization angle θ_B. Thus, material check fails if $abs ((\theta_A - \theta_B) - (\gamma_A - \gamma_B)) > thr_\gamma$.

In summary, the material check succeeds if:

- $(abs ((\theta_A - \theta_B) - (\gamma_A - \gamma_B)) \leq thr_\gamma)$

(i.e. checking that the change between γ_A and γ_B from the first to the second image is consistent with the change in the first polarization angle from θ_{A1} to θ_{B1} and the second polarization angle from θ_{A2} to θ_{B2}); and

- $(Procrustes(C_A,C_B) \leq thr_P)$

(i.e. checking that the distribution of spherulite centers in the first image corresponds with the distribution of spherulite centers in the second image); and

- ($\sigma_A \leq thr_\sigma$)

(i.e. checking that the angles of the arms of the crosses for that image are substantially consistent over the entire image $I_A(x, y)$); and

- ($\sigma_B \leq thr_\sigma$)

(i.e. checking that the angles of the arms of the crosses for that image are substantially consistent over the entire image $I_B(x, y)$).

Otherwise the material check fails.

If images can be measured accurately aligned at subpixel level, then simpler approaches (e.g. pixel remapping) are possible to perform the material check. An additional check of coverage may be applied in parallel, i.e. finding the size of neighbourhoods and checking that the area of all detected neighbourhoods in an image is close enough to the area of the full array section probed.

Given a film section has been identified as a genuine spherulite array using the material check procedure, a compact individual PUF profile can be assembled as the set of the extracted spherulite locations $C = C_A$ (alternatively $C = C_B$, note that C_A is identical to C_B in an ideal crystalline film). For efficient representation profiles C can be stored as Shape Contexts (see: S. Belongie, J. Malik, and J. Puzicha. Shape context: A new descriptor for shape matching and object recognition. In Neural Information Processing Systems, pages 831–837, 2000). The images I_A and I_B themselves can be added to the PUF profile (increasing storage demands) to give an option for enhancing recognition accuracy by further image processing techniques outside the scope of this description.

Two stored PUF profiles, C_1 and C_2 represented as 2D Shape Contexts, can be compared by applying a distance measure. The Earth Mover's Distance EMD (see: Y. Rubner, C. Tomasi, and L. J. Guibas. The earth mover's distance as a metric for image retrieval. International Journal of Computer Vision, 40(2):99–121, 2000) can, for instance, be used for comparing Shape Contexts (see: T. Burghardt. Visual Animal Biometrics, PhD thesis, University of Bristol, 2008).

Thresholding of the Earth Mover's Distance leads to a decision 'authentic' if

$$EMD(C_1, C_2) < thr_{auth}$$

otherwise to a decision 'false'. Verification of the authenticity of a PUF profile against a database of PUF profiles includes the application of the above pairwise comparison to each database entry until an 'authentic' database entry has been identified (provision of 'authentic' classification + tag ID)) or the search ends with no such identification (provision of 'false' classification). Geometric Hashing over database entries C may be used to increase the efficiency of search. Note that other distance measures can be applied and other encodings of the crystalline structure can be used.

In summary, the methods described above can be used to produce, enrol, image and authenticate a tag as follows.

Production/Enrolment of a tag

1) production of a suitable solid film tag 32 comprised of birefringent spherulite crystals

2) if required, attachment to a carrier medium such as a plastic or credit card

3) insertion of the tag into or presentation to a reading device

4) imaging of the tag under one polarisation angle (i.e by setting the motor 34)

5) generating a PUF profile with storing individually characteristic features of this image by submission (optionally together with the image) as a new entry to a central database 40

6) at the central database 40, associating the PUF profile with a unique ID

7) commissioning of the tag with its ID to the user/authenticating party

Imaging of a tag via reading device

1) rotating the polarisers to the required polarisation angle via stepper motor 34, controlled by the control unit 37,

2) forming an image of the illuminated tag using the camera system 16 controlled by the control unit 37, and

3) transmitting the image to the control unit 37

4) storing the image (temporarily) on the control unit 37

Authentication of a tag

1) insertion of the tag into or presentation to a reading device

2) forming an image $I_A(x, y)$ of the tag under one random polarisation angle θ_A

3) forming an image $I_B(x, y)$ of the tag under one random polarisation angle θ_B, where $\theta_A \neq \theta_B$

4) extracting a set of spherulite centers C_A from $I_A(x, y)$

5) extracting a set of spherulite centers C_B from $I_B(x, y)$

6) given C_A and $I_A(x, y)$ calculating Maltese cross orientation γ_A in $I_A(x, y)$

7) given C_B and $I_B(x, y)$ calculating Maltese cross orientation γ_B in $I_B(x, y)$

8) performing material authentication by probing constraints for:

- $(\text{abs} ((\theta_A - \theta_B) - (\gamma_A - \gamma_B)) \leq \text{thr}_\gamma)$; and
- $(\text{Procrustes}(C_A, C_B) \leq \text{thr}_P)$; and
- $(\sigma_A \leq \text{thr}_\sigma)$; and
- $(\sigma_B \leq \text{thr}_\sigma)$

report MATERIAL AUTHENTICATION FAILURE as output to user (for instance a visual display on a screen or printout) if any constraint not satisfied and exit

9) send I_A, I_B , or more preferably C_A, C_B, from client trusted reader environment 38 to database server 40 via secured channel 41

10) at database server 40, calculate result = min (EMD(C_A, PUF profile)) or alternative distance measure using image information result = min (distance(C_A, I_A, C_B, I_B, PUF profile, stored image))

report AUTHENTICATION FAILURE to client via secured channel if result > thrA, otherwise report AUTHENTICATION SUCCESS to client 45 via secured channel 41

11) report feedback received from database server 40 to user 45 and exit

Although the invention has been described above with reference to one or more preferred embodiments, it will be appreciated that various changes or modifications may be made without departing from the scope of the invention as defined in the appended claims.

Claims

1. A method of verifying the authenticity of a solid crystalline birefringent film, the film comprising an array of spherulites which form a unique pattern, the method comprising:

   a. performing an identity check by measuring the unique pattern formed by the spherulites and comparing the measured pattern with stored identity data; and

   b. performing a material check by:

      i. generating a first set of optical conditions by illuminating the film with polarized light which is polarized at a first polarization angle θ_{A1} relative to an imaginary line in the plane of the film, and filtering light from the film with a polarizing filter which has its polarization axis oriented at a second polarization angle θ_{A2} relative to the imaginary line in the plane of the film;

      ii. imaging the filtered light from the polarizing filter under the first set of optical conditions to form a first image which shows the spherulites with crosses emanating from their centres, two arms of the crosses being oriented at an angle γ_A relative to the imaginary line in the plane of the film;

      iii. generating a second set of optical conditions by changing the first polarization angle to θ_{B1} and/or the second polarization angle to θ_{B2};

      iv. imaging the filtered light from the polarizing filter under the second set of optical conditions to form a second image which shows the spherulites with crosses emanating from their centres, the two arms of the crosses being oriented at γ_B relative to the imaginary line in the plane of the film, wherein γ_B in the second image is different to γ_A in the first image; and

      v. checking that the change between γ_A and γ_B from the first to the second image is consistent with the change in the first

polarization angle from θ_{A1} to θ_{B1} and/or the second polarization angle from θ_{A2} to θ_{B2}.

2. The method of claim 1 wherein the unique pattern formed by the spherulites is measured by analysing the first image or the second image.

3. The method of claim 1 or 2 wherein:

step b.iii. comprises changing the first polarization angle to θ_{B1} and the second polarization angle to θ_{B2}, wherein θ_{A1}- θ_{B1} = θ_{A2}- θ_{B2}; and

step b.v. comprises checking that the change between γ_A and γ_B from the first to the second image is consistent with the change in the first polarization angle from θ_{A1} to θ_{B1} and the second polarization angle from θ_{A2} to θ_{B2}.

4. The method of claim 3 wherein the absolute values of θ_{A1}- θ_{A2} and θ_{B1}- θ_{B2} are approximately equal to 90°.

5. The method of any preceding claim wherein step b.v. comprises checking that the absolute value of $(\theta_A - \theta_B) - (\gamma_A - \gamma_B)$ is greater than a threshold.

6. The method of any preceding claim wherein the identity check is performed in step a. by measuring the unique pattern formed by the spherulites to generate a profile, and checking that the profile corresponds with a stored profile.

7. The method of any preceding claim wherein the material check further comprises analysing the first image to generate data C_A which indicates the distribution of spherulite centers in the first image; analysing the second image to generate data C_B which indicates the distribution of spherulite centers in the second image; and checking that C_A corresponds with C_B.

8. The method of claim 7 wherein the step of checking that C_A corresponds with C_B comprises checking that Procrustes(C_A,C_B) is less than a threshold.

9. The method of any preceding claim wherein the material check further comprises analysing each image to check that the angles of the arms of the crosses for that image are substantially consistent over the entire image.

10. The method of any preceding claim wherein the angles γ_A and γ_B are calculated by measuring the angles α for each of the individual crosses in the images, and calculating the mean values of α per image.

11. The method of any preceding claim further comprising generating an output in accordance with the results of the identify check and the material check.

12. The method of any preceding claim wherein the film is a polymer film.

13. Apparatus for verifying the authenticity of a solid crystalline birefringent film by the method of any preceding claim, the apparatus comprising:

    a. an illumination system for illuminating the film with polarized light which is polarized at a first polarization angle θ_1 relative to an imaginary line in the plane of the film;

    b. a polarizing filter for filtering light from the film which has its polarization axis oriented at a second polarization angle θ_2 relative to the imaginary line in the plane of the film;

    c. a camera arranged to image filtered light from the polarizing filter;

    d. an identity check module configured to perform an identity check by measuring the unique pattern formed by the spherulites and comparing the measured pattern with stored identity data; and

    e. a material check module configured to:

        i. operate the camera to form a first image under a first set of optical conditions, the first image showing the spherulites with crosses emanating from their centres, two arms of the crosses being oriented at γ_A relative to an imaginary line in the plane of the film;

        ii. operate the camera to form a second image under a second set of optical conditions in which the first polarization angle θ_1 and/or the second polarization angle θ_2 has changed, the second image showing the spherulites with crosses emanating from their centres, the two arms of the crosses being oriented at γ_B relative

to the imaginary line in the plane of the film, wherein γ_B in the second image is different to γ_A in the first image; and

iii. check that the change between γ_A and γ_B from the first image to the second image is consistent with the change in the first polarization angle θ_1 and/or the second polarization angle θ_2.

14. The apparatus of claim 13 wherein the illumination system comprises a light source and a polarising filter arranged to polarize light from the light source at a first polarization angle θ_1 relative to an imaginary line in the plane of the film.

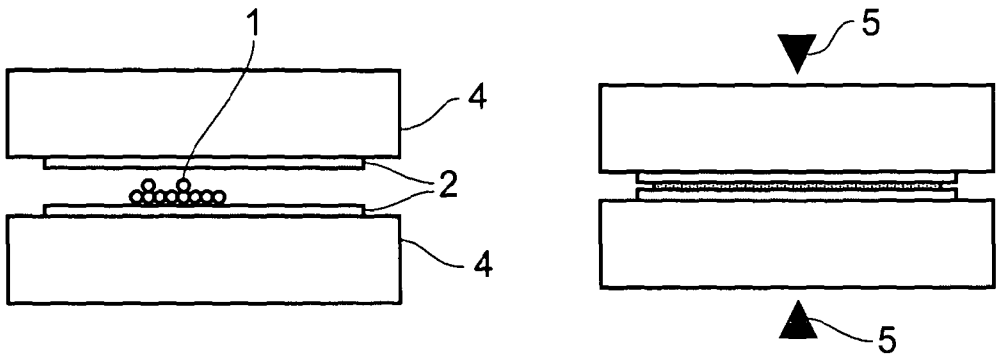

FIG. 1

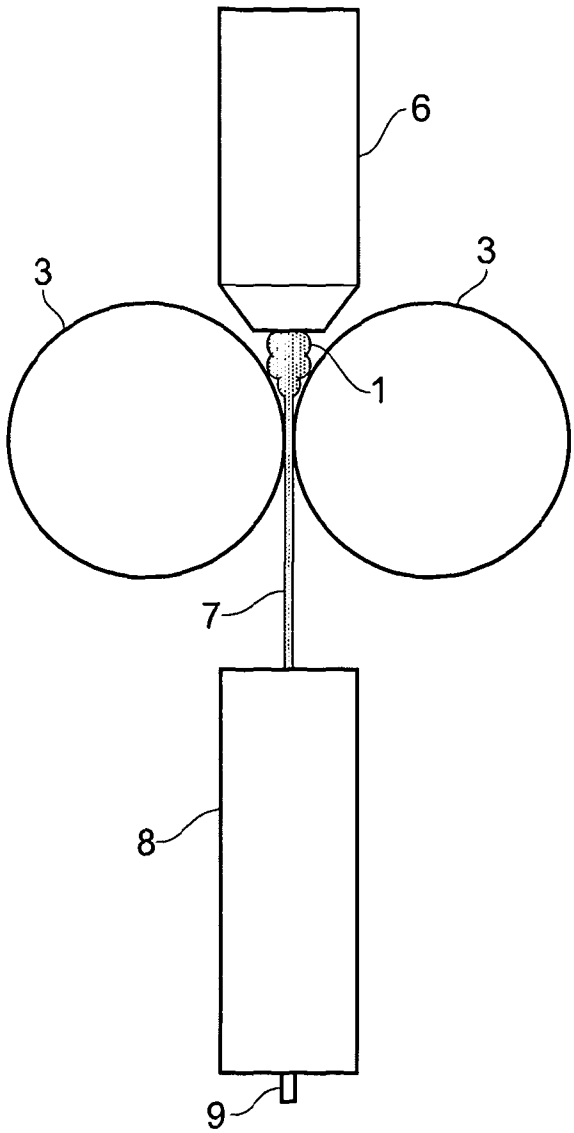

FIG. 2

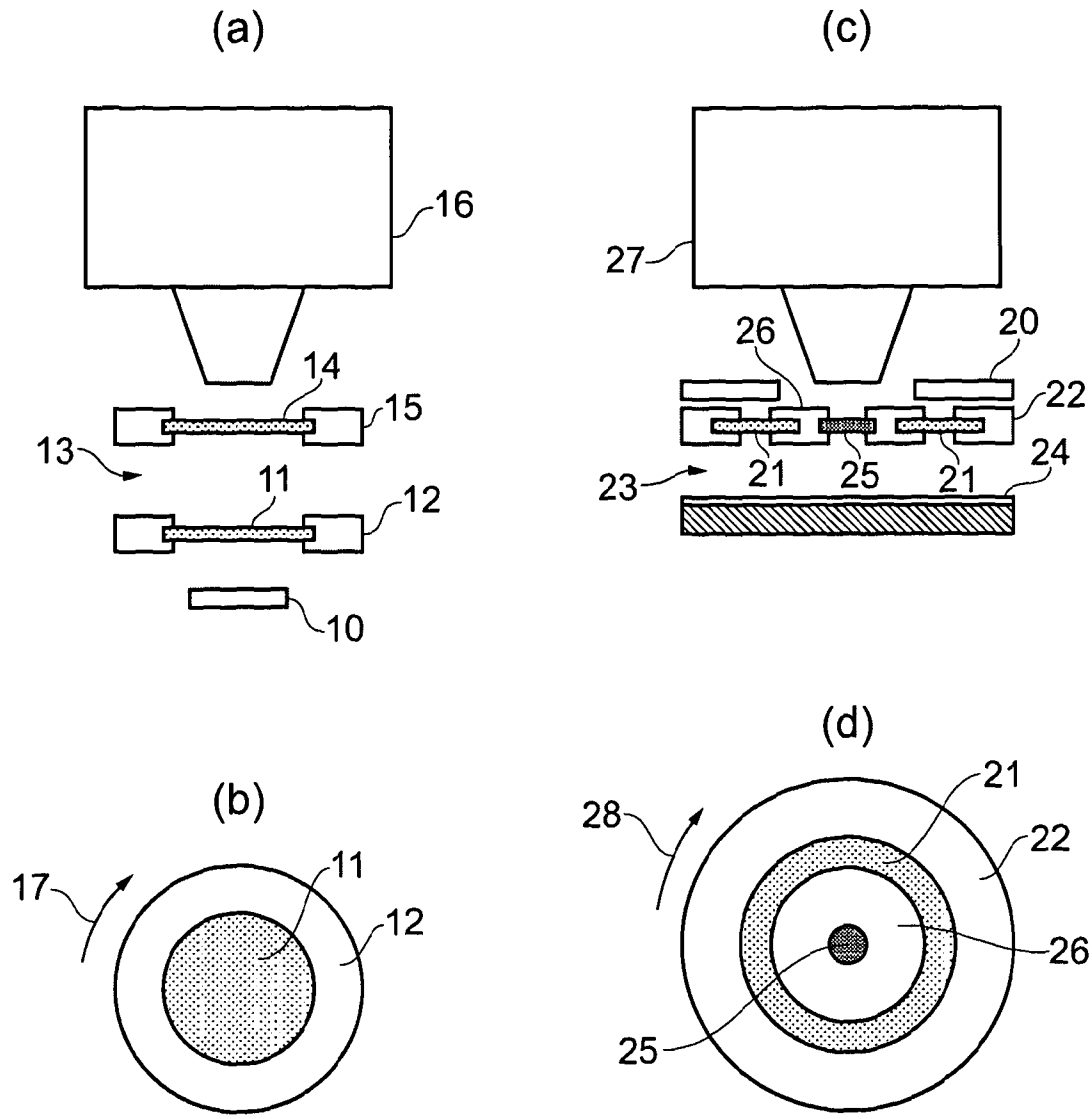
(a)
16
14
15
13
11
12
10
(c)
27
26
20
22
23
21
25
21
24
(b)
17
11
12
(d)
28
21
22
26
25

FIG. 3

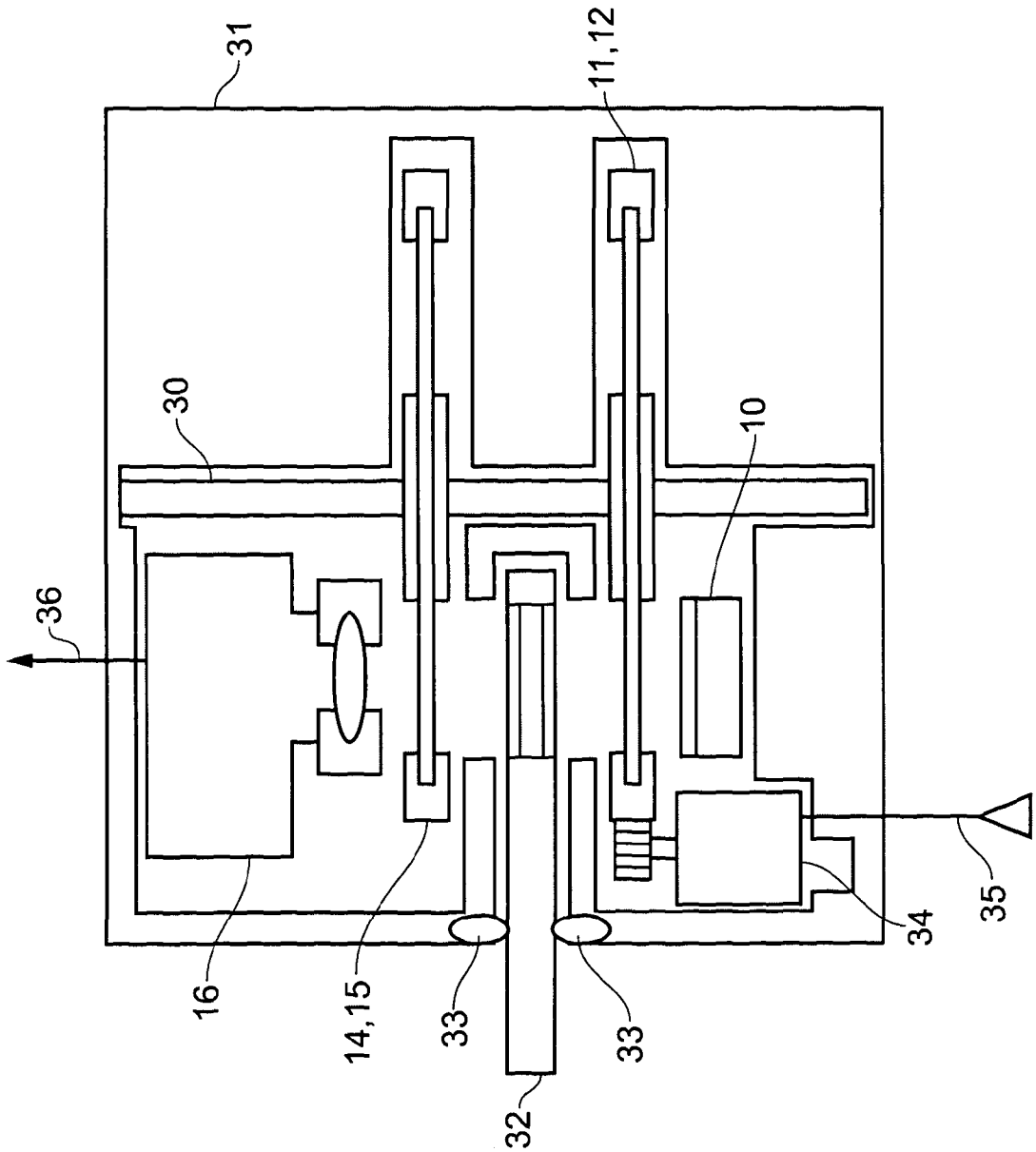

FIG. 4

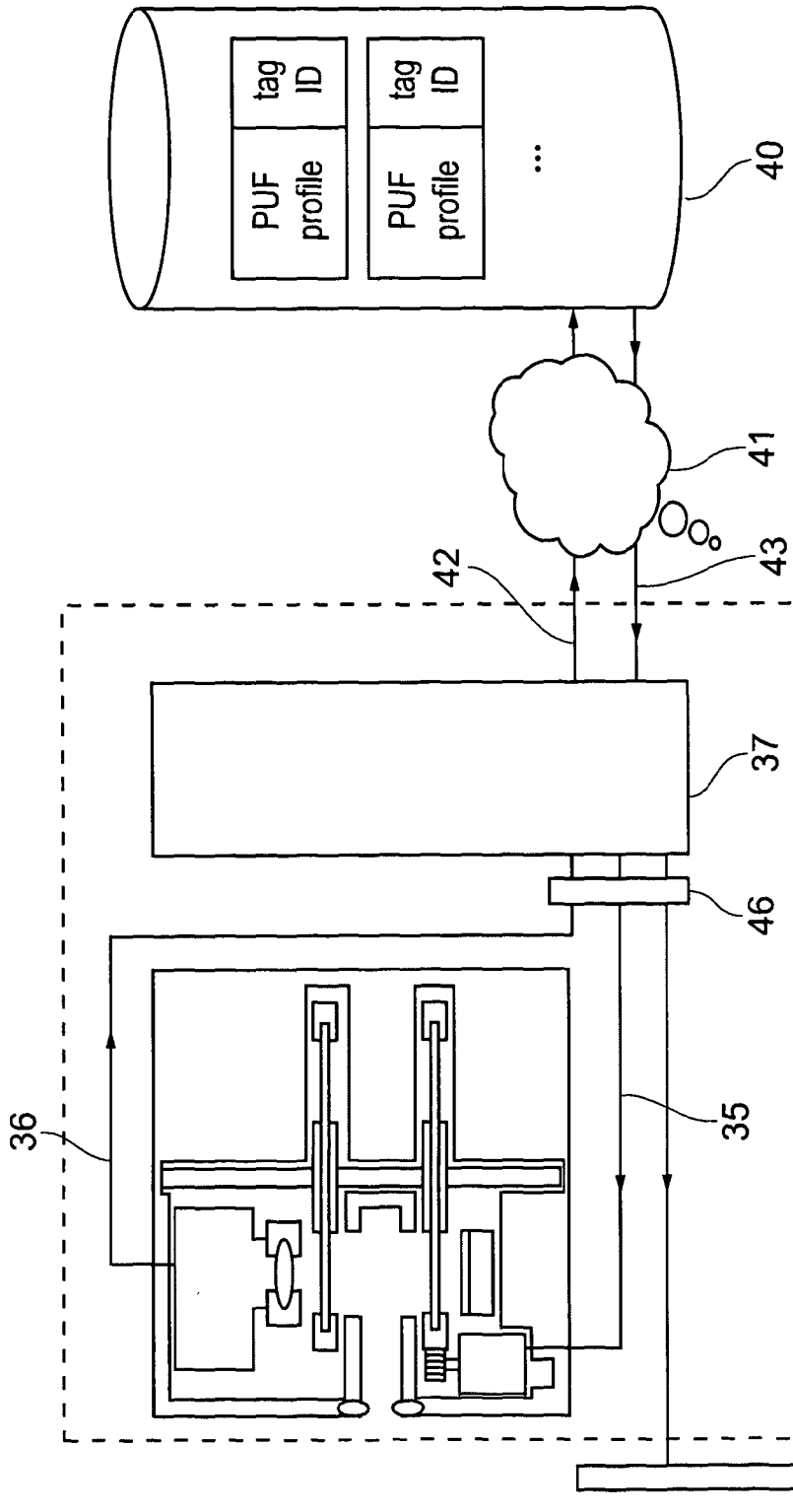
tag ID
PUF profile
tag ID
PUF profile
...
40
41
42
43
37
46
36
35
38
45

FIG. 5

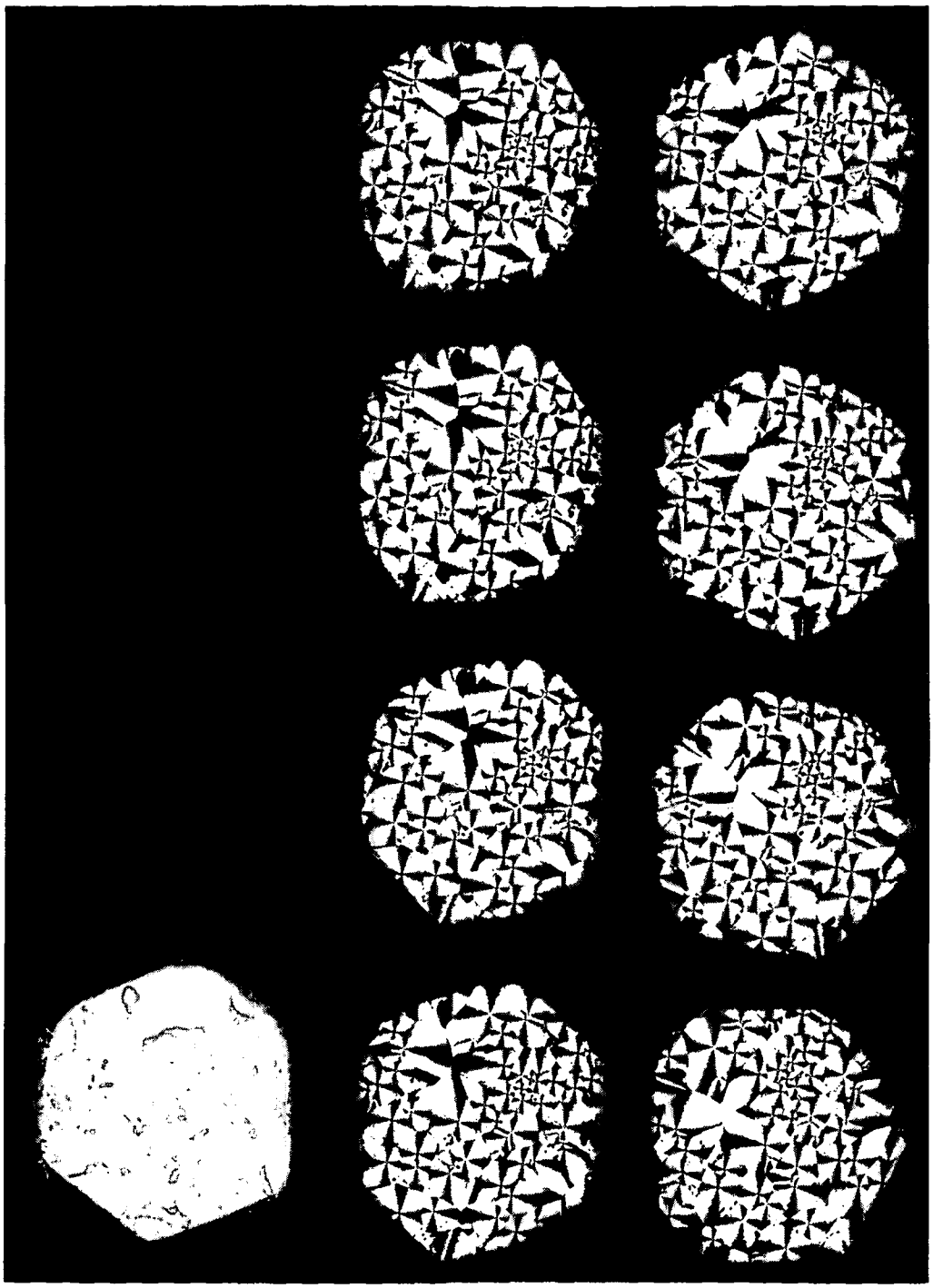

FIG. 6

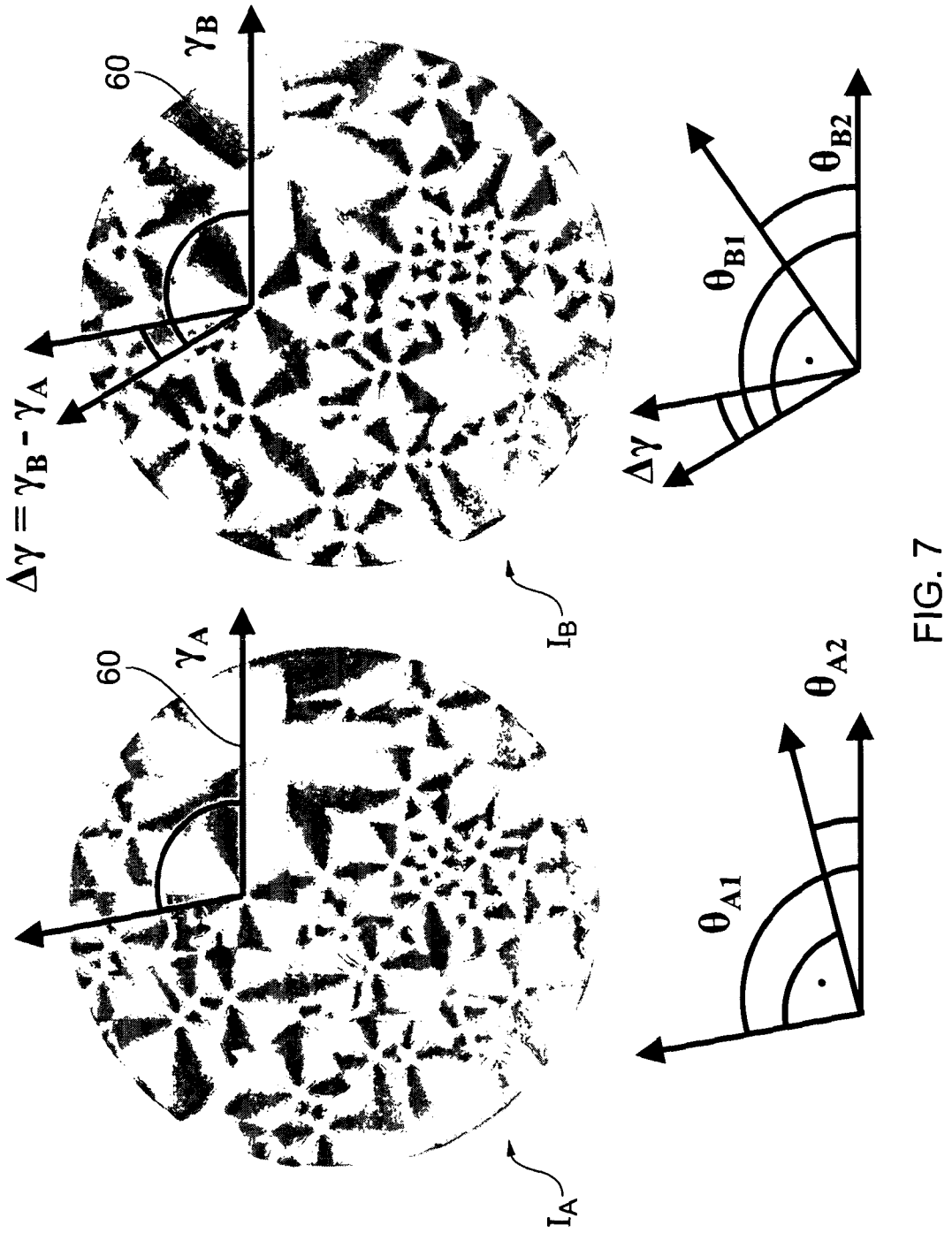
60
γ_B
$\Delta\gamma = \gamma_B - \gamma_A$
I_B
θ_{B2}
θ_{B1}
$\Delta\gamma$
60
γ_A
I_A
θ_{A2}
θ_{A1}

FIG. 7

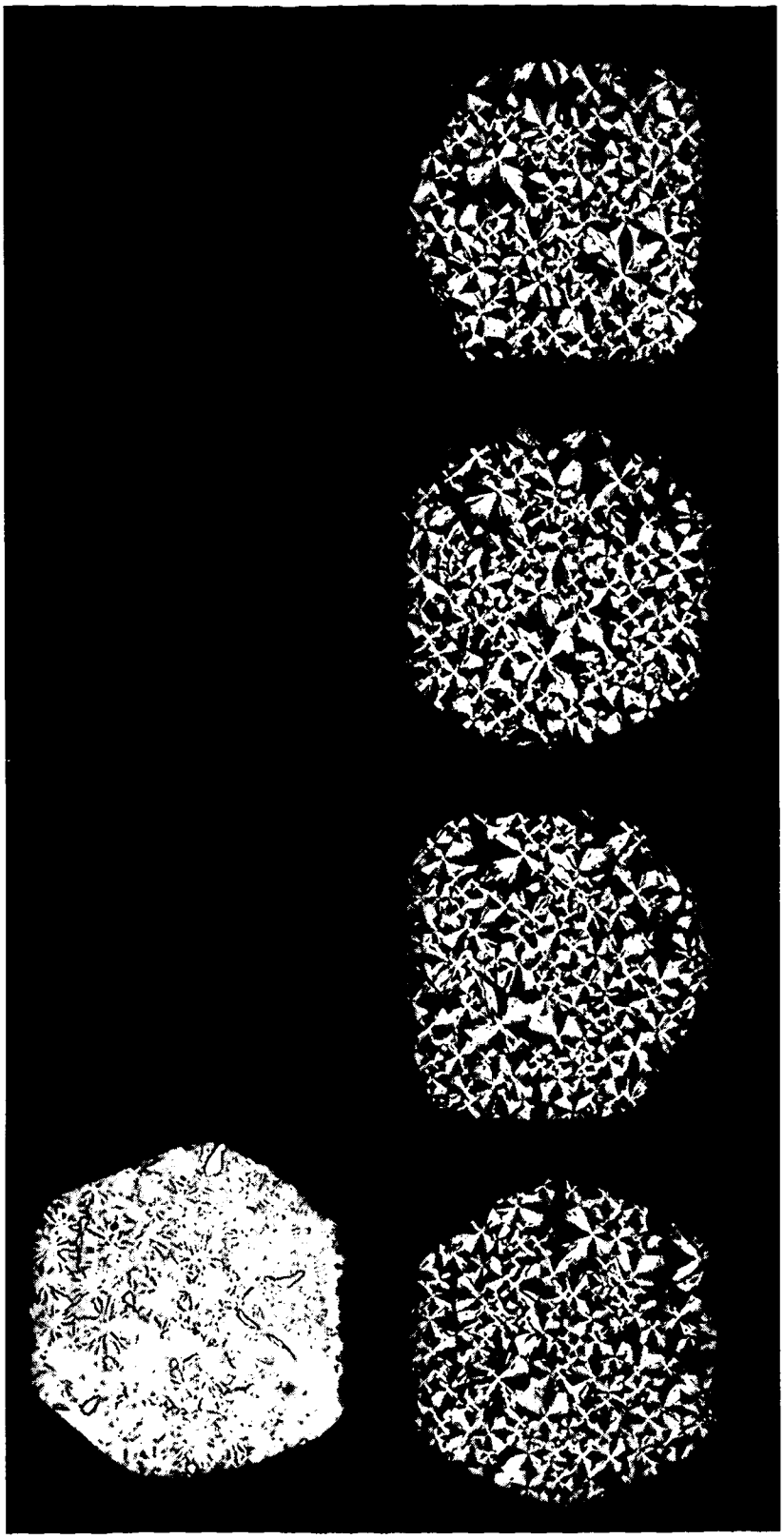

FIG. 8

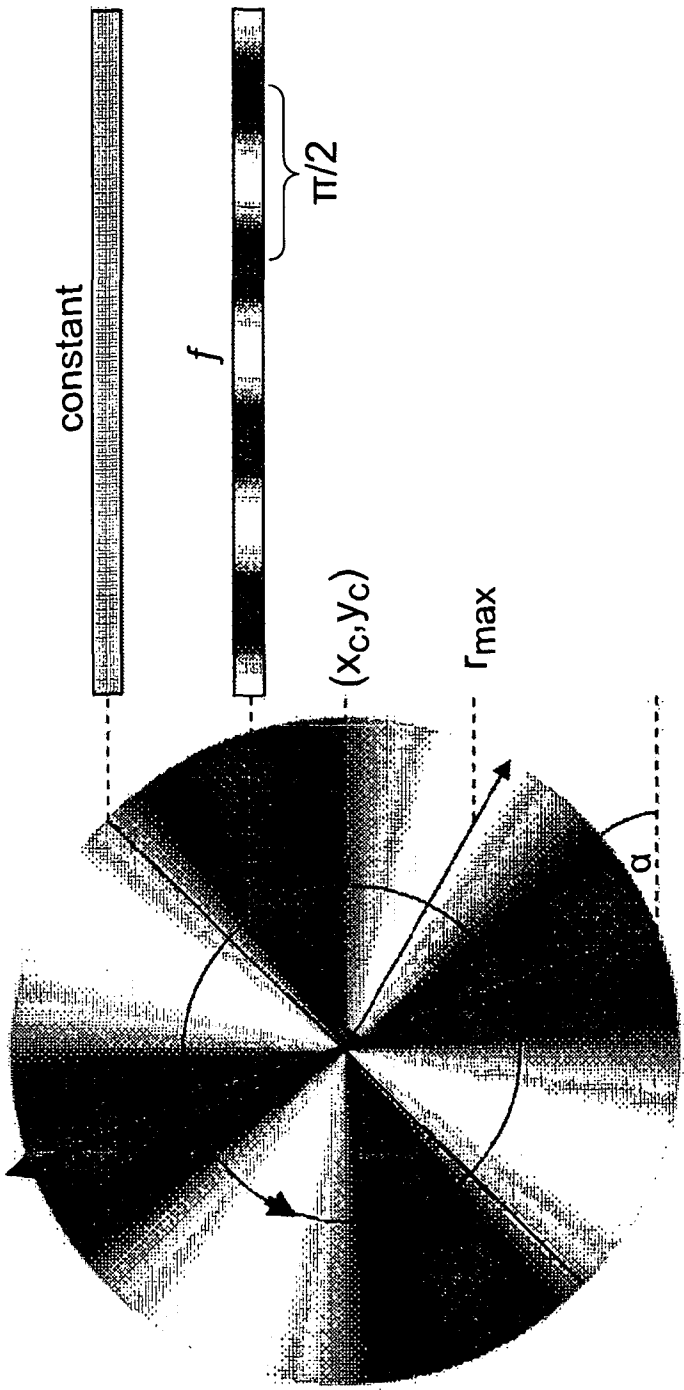

FIG. 9

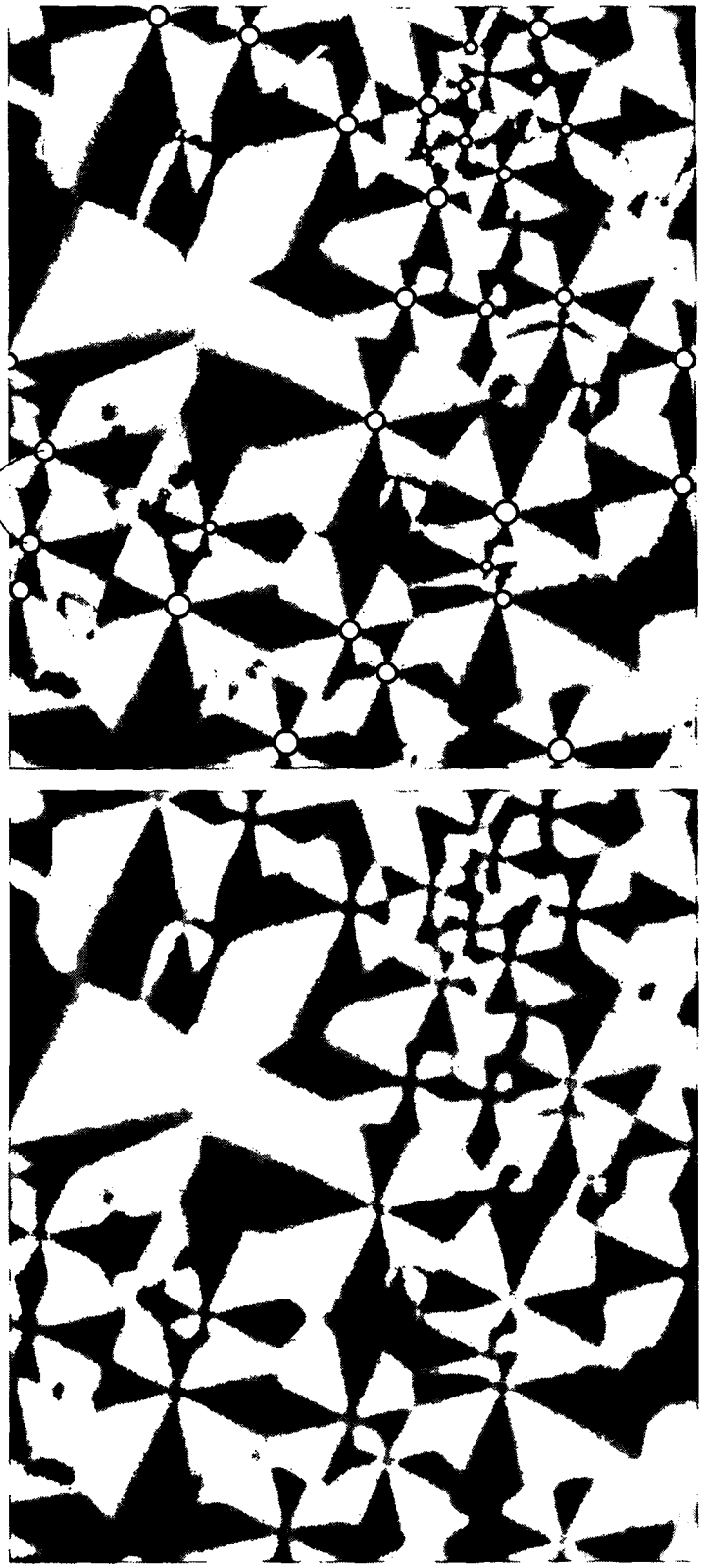

FIG. 10

INTERNATIONAL SEARCH REPORT

International application No
PCT/GB2011/051517

A. CLASSIFICATION OF SUBJECT MATTER
INV. G07D7/20
ADD.

According to International Patent Classification (IPC) or to both national classification and IPC

B. FIELDS SEARCHED

Minimum documentation searched (classification system followed by classification symbols)
G07D

Documentation searched other than minimum documentation to the extent that such documents are included in the fields searched

Electronic data base consulted during the international search (name of data base and, where practical, search terms used)
EPO-Internal

C. DOCUMENTS CONSIDERED TO BE RELEVANT

Category*	Citation of document, with indication, where appropriate, of the relevant passages	Relevant to claim No.
A	WO 2007/002873 A2 (EIDGENOESS TECH HOCHSCHULE [CH]; SPENCER NICHOLAS [CH]; UGGOWITZER PET) 4 January 2007 (2007-01-04) page 2, line 5 - line 7 page 5, line 5 - line 8 page 18, line 31 - page 19, line 5 page 20, line 8 - line 17 page 22, line 19 - page 24, line 3; figures 3a, 3b, 4 -----	1,2,6, 11-14

☐ Further documents are listed in the continuation of Box C.

☒ See patent family annex.

* Special categories of cited documents :

"A" document defining the general state of the art which is not considered to be of particular relevance

"E" earlier document but published on or after the international filing date

"L" document which may throw doubts on priority claim(s) or which is cited to establish the publication date of another citation or other special reason (as specified)

"O" document referring to an oral disclosure, use, exhibition or other means

"P" document published prior to the international filing date but later than the priority date claimed

"T" later document published after the international filing date or priority date and not in conflict with the application but cited to understand the principle or theory underlying the invention

"X" document of particular relevance; the claimed invention cannot be considered novel or cannot be considered to involve an inventive step when the document is taken alone

"Y" document of particular relevance; the claimed invention cannot be considered to involve an inventive step when the document is combined with one or more other such documents, such combination being obvious to a person skilled in the art.

"&" document member of the same patent family

Date of the actual completion of the international search	Date of mailing of the international search report
11 November 2011	24/11/2011

Name and mailing address of the ISA/	Authorized officer
European Patent Office, P.B. 5818 Patentlaan 2 NL - 2280 HV Rijswijk Tel. (+31-70) 340-2040, Fax: (+31-70) 340-3016	Neville, David

1

INTERNATIONAL SEARCH REPORT

Information on patent family members

International application No
PCT/GB2011/051517

Patent document cited in search report	Publication date	Patent family member(s)	Publication date
WO 2007002873 A2	04-01-2007	AT 504909 T	15-04-2011
		AU 2006263553 A1	04-01-2007
		CA 2613368 A1	04-01-2007
		EP 1908044 A2	09-04-2008
		JP 2008545169 A	11-12-2008
		US 2008197620 A1	21-08-2008
		WO 2007002873 A2	04-01-2007