3 Sheets--Sheet 1.

C. L. & L. P. HOYT.

Improvement in Planing-Machines.

No. 132,663. Patented Oct. 29, 1872.

Fig. 1.

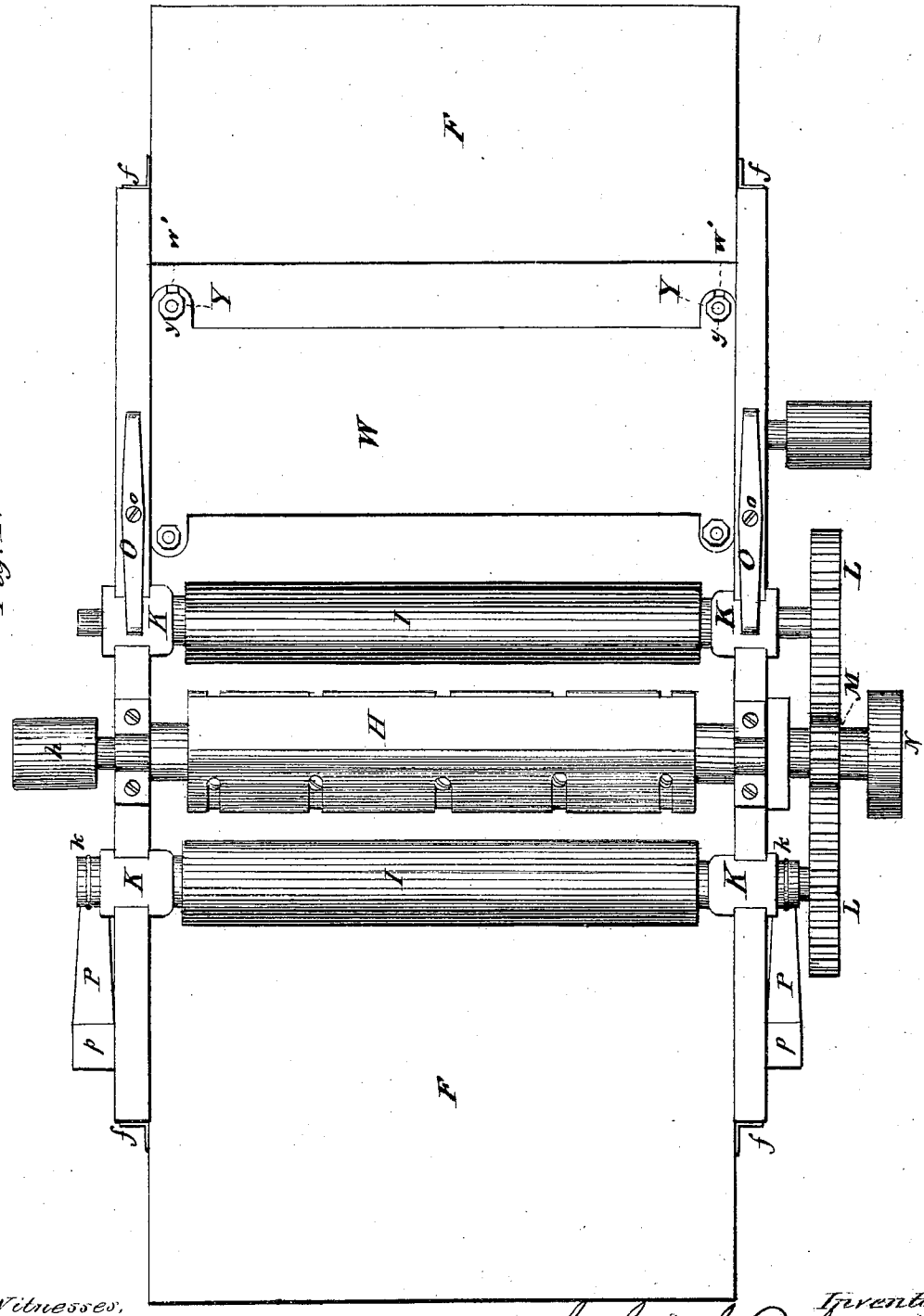

Witnesses,
A. Poole.
John R. Young

Inventors,
C. L. and L. P. Hoyt, by
Prindle and Redfield
attys

AM. PHOTO-LITHOGRAPHIC CO. N.Y. (OSBORNE'S PROCESS)

3 Sheets--Sheet 2.

C. L. & L. P. HOYT.

Improvement in Planing-Machines.

No. 132,663. Patented Oct. 29, 1872.

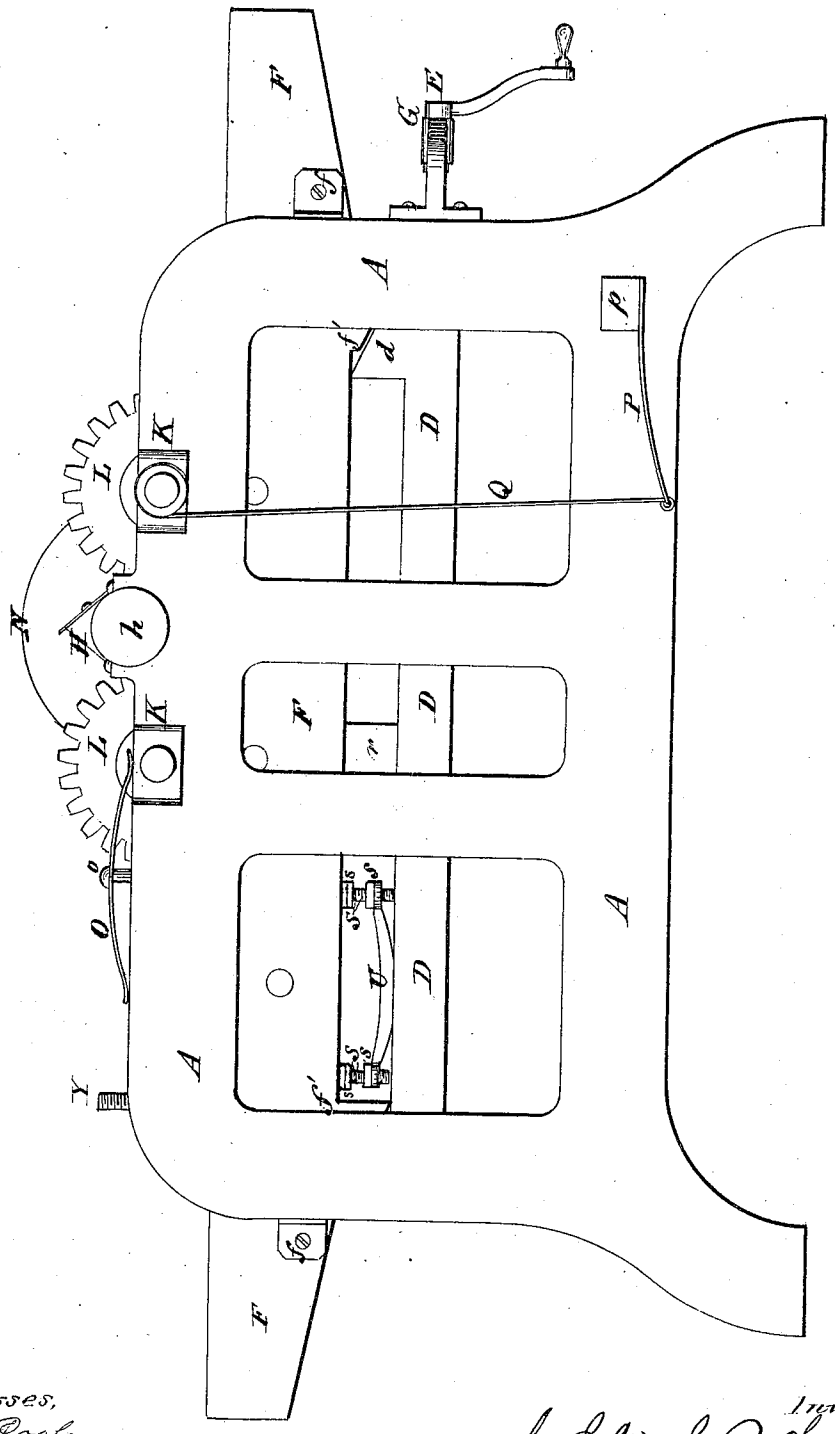

Fig. 2.

Witnesses,
C. H. Poole
John R. Young

Inventors.
C. L. and L. P. Hoyt, by
Pindle and Co., their
Attys.

A.M. PHOTO-LITHOGRAPHIC CO. N.Y. (OSBORNE'S PROCESS)

3 Sheets--Sheet 3.

C. L. & L. P. HOYT.

Improvement in Planing-Machines.

No. 132,663. Patented Oct. 29, 1872.

Fig. 3.

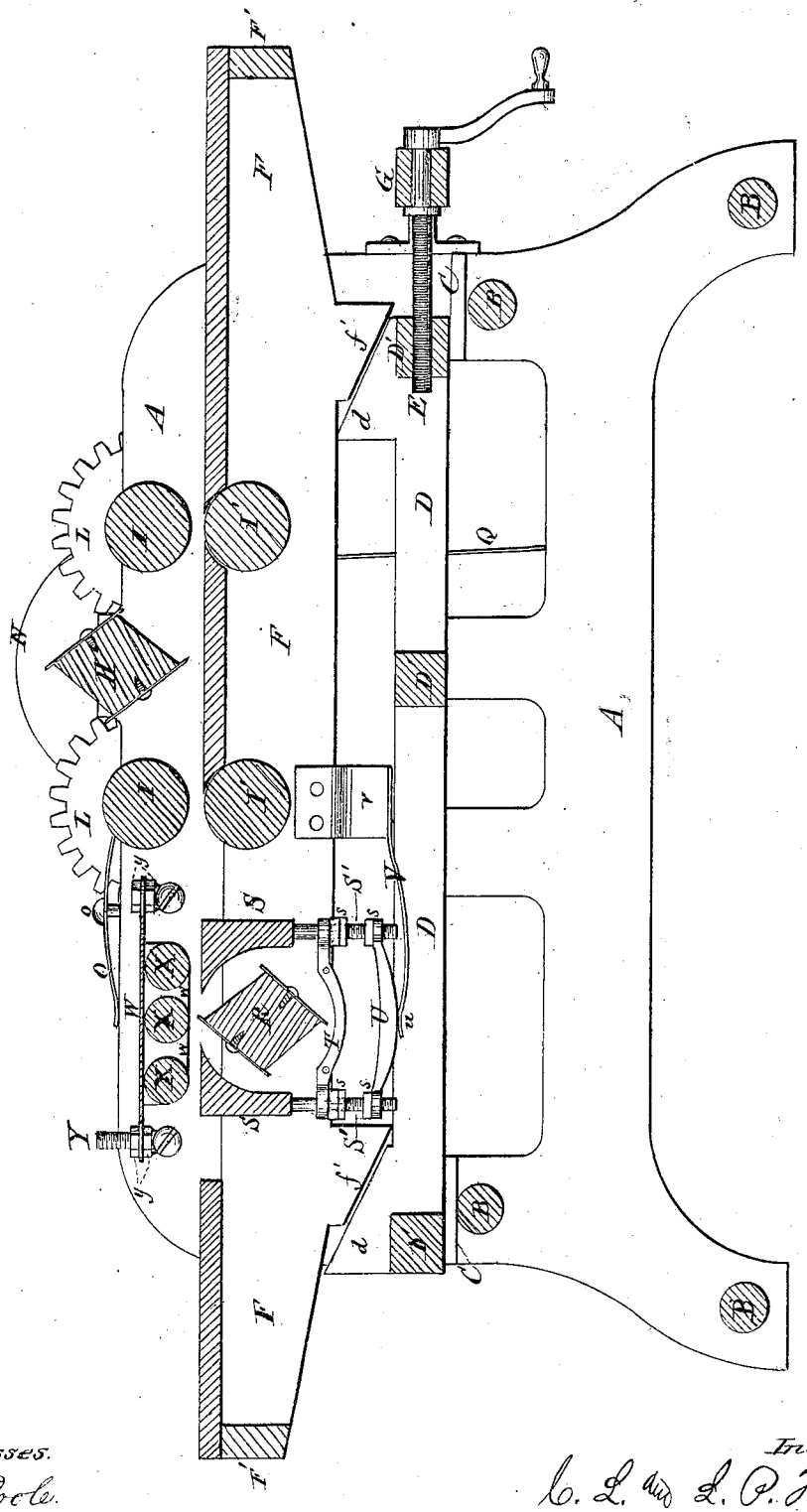

Witnesses.
C. H. Poole.
John R. Young

Inventors.
C. L. and L. P. Hoyt, by
Pindle and Pindle
Attys.

AM. PHOTO-LITHOGRAPHIC CO. N.Y. (OSBORNE'S PROCESS.)

UNITED STATES PATENT OFFICE.

CHARLES L. HOYT AND LUCIUS P. HOYT, OF AURORA, ILLINOIS.

IMPROVEMENT IN PLANING-MACHINES.

Specification forming part of Letters Patent No. **132,663**, dated October 29, 1872.

To all whom it may concern:

Be it known that we, CHAS. L. HOYT and LUCIUS P. HOYT, of Aurora, in the county of Kane, and in the State of Illinois, have invented certain new and useful Improvements in Planing-Machines; and do hereby declare that the following is a full, clear, and exact description thereof, reference being had to the accompanying drawing making a part of this specification, in which—

Figure 1 is a plan view of the upper side of our device; Fig. 2 is a side elevation of the same; and Fig. 3 is a vertical central section on line *x x* of Fig. 1.

Letters of like name and kind refer to like parts in each of the figures.

The object of our invention is the production of a machine by means of which the lower side of lumber may, when desired, be dressed or planed simultaneously with the upper side of the same; and it consists principally in the construction of the presser-bars placed upon each side of and combined with the lower cutter-cylinder, substantially as and for the purpose hereinafter shown; it consists further in the means employed for regulating the upward pressure and vertical position of said presser-bars, substantially as and for the purpose hereinafter set forth.

In the annexed drawing, A represents the frame of the machine, constructed of metal in two sections, having the form shown, which sections are connected together by means of a number of cross-bars, B, that extend horizontally between the same. Resting upon suitable bearings C, attached to or upon the inner face of each frame, side, or section A, is a rectangular frame composed of two side rails, D, which are connected together by means of three cross-bars, D′, placed at their ends and near their longitudinal centers, the dimensions of said frame being about equal to the space between the sides and ends of said main or supporting frame. A screw, E, journaled within a brace, G, attached to and extending between the ends of the frame sides A, has its threaded end fitted into a corresponding opening in one of the cross-bars D′, and furnishes a means whereby the frame D and D′ may be moved longitudinally within its bearings, for the purpose hereinafter shown. Immediately above the frame D, and resting upon the same, is a table composed of suitable side rails F, connected together by means of end bars F′, and covered or enclosed upon its upper side, which table extends outward in either direction beyond the main frame, and is confined in longitudinal position, with relation to the same, by means of suitable lugs *f*, which extend laterally outward from the sides of said table and bear against the ends of said frame; said lugs, while preventing horizontal motion of the table, offer no obstruction to its free vertical movement. Journaled within suitable boxes within the upper side of the main frame is a cutter head or cylinder, H, while upon each side of and parallel with the same is placed a feed-roller, I, which rests in suitable boxes K that are capable of a vertical movement within their bearings, all of usual construction. The cutter-head H is driven by means of a pulley, *h*, secured upon the projecting end of its shaft, while the feed-rollers are caused to rotate in the same direction by means of a suitable gear-wheel, L, which is secured upon the projecting end of each roller-shaft, and meshes with a pinion, M, that is pivoted between said gear-wheels, and is provided at its outer end with a wheel or pulley, N, from which a belt may be extended to the driving-shaft. In order that the feed-rollers may be pressed downward with sufficient force to cause them to engage with and move forward boards while being operated upon a spring, O, having a semi-elliptic form is placed upon the upper edge of the main frame, with one of its ends resting upon the center of a roller-box, K, where said spring is secured in place and caused to exert any required degree of downward pressure by means of a screw, *o*, that passes downward through the center of said spring, and has its lower threaded end contained within a corresponding opening in said frame. By turning the screw downward, its head will carry with it the spring and cause the latter to bear with increased force upon the roller-box. Another means for accomplishing this purpose consists of a spring, P, secured at one end to or upon the lower side of a lug, *p*, which projects horizontally outward from the lower portion of the main frame, from whence said spring extends rearward and downward and has its outer end connected to or with a roller-

box, K, by means of a rod, Q, that passes through a suitable opening in said spring and around a circular-grooved neck, *k*, which extends outward from said box. Immediately beneath each of the feed-rollers I a second roller, I′, is journaled within the table with its periphery slightly above the surface of the same, which roller serves to relieve the lumber passing through from all unnecessary friction. In order that the supporting-table may be elevated or depressed, as the varying thickness of the boards may require, the rails F are each provided with two short inclines, *f′*, which have the same relative angle and are placed near the ends of said rails. Immediately beneath the inclines *f′* and attached to the rails D are placed other inclines *d* which correspond in angle to the former and serve as a bearing for the same. As thus arranged it will be seen that if the frame D be drawn toward or moved from the screw E the table will be correspondingly elevated or depressed by the action of the inclines. The machine thus constructed is capable of dressing or planing the upper side of a board having any ordinary thickness, but in order that both sides may be simultaneously operated upon, the following-described mechanism is employed: A cutter cylinder or head, R, is journaled within the rails F in rear of the feed-rollers I in such a position as to cause its cutters to work slightly above the surface of the table. Upon each side of the cylinder R is placed a presser-bar, S, which has the form shown in Fig. 3, and is so connected with the rails F as to have a vertical motion only. From the lower edge at each end of the bars S a rod, S′, extends vertically downward through a guide, T, attached to the inner face of the rail F, and is provided with a screw-thread upon which are fitted three nuts, *s*. A metal yoke, U, provided at each end with a suitable opening, is placed over the lower ends of the rods S′ upon each side of the machine, and bears upon and is pressed upward against the nuts *s* by means of a spring, V, which spring is attached at one end to or upon a lug, *v*, that is attached to the rails F while the opposite end of said spring presses upward against the center of said yoke. A stud, *u*, extending downward from the center of the yoke and passing through a corresponding opening in the end of the spring insures the relative positions of said parts. It will now be seen that the upward pressure of the bars can be varied at will by changing the vertical position of the lower or bearing-nuts, while the degree of upward movement of said presser-bars can be regulated by varying the positions of the upper nuts upon the bolts, said nuts being caused to bear upon the lower side of the guide T. Immediately over the cylinder R and presser-bars S is placed a metal plate, W, within suitable bearings *w*, secured upon the lower face of which are journaled three friction-rollers, X. The forward side of the roller-frame is pivoted to or upon the main frame A while its rear side is held in vertical position by means of two bolts, Y, which, at their lower ends, are pivoted to or upon the inner faces of said frame-sides A and extend upward through corresponding slots *w′* provided in said frame or plate W. A nut, *y*, placed above and a similar nut below the plate W serve to regulate the vertical position of its forward edge, and also to confine the same in place upon and in relation to the bolt. The devices thus constructed may be used in connection with the other operative mechanism so as to dress or plane the lower side of a board at the same time that the upper side is being operated upon, while by loosening the upper nuts of the bolts Y, turning said bolts outward so as to release the front edge of the roller-frame, turning said frame upward, and then drawing the presser-bars S below the level of the table, the machine can be used in the ordinary manner for dressing the upper side only of a board.

The advantages of this construction will be apparent, furnishing, as it does, the means whereby one or both sides of lumber can be planed at will, while costing but slightly more than a machine capable of performing but one of these operations.

Having thus fully set forth the nature and merits of our invention, what we claim as new is—

1. In combination with the cutter-cylinder R and plate W the presser-bars S, provided upon their inner faces with semicircular recesses and capable of a vertical motion, substantially as and for the purpose specified.

2. The means employed for regulating the upward pressure and the vertical position of the presser-bars S, consisting of the bolts S′ provided with the nuts *s*, the guides T, the yokes U, and the springs V, substantially as shown and described.

In testimony that we claim the foregoing we have hereunto set our hands this 15th day of June, 1872.

CHARLES L. HOYT.
LUCIUS P. HOYT.

Witnesses:
WILLIS HOYT,
HOWARD SALLS.