May 26, 1931. T. M. FOULK 1,807,521

APPARATUS FOR CLEANING GAS

Filed July 12, 1924

Fig. 1.

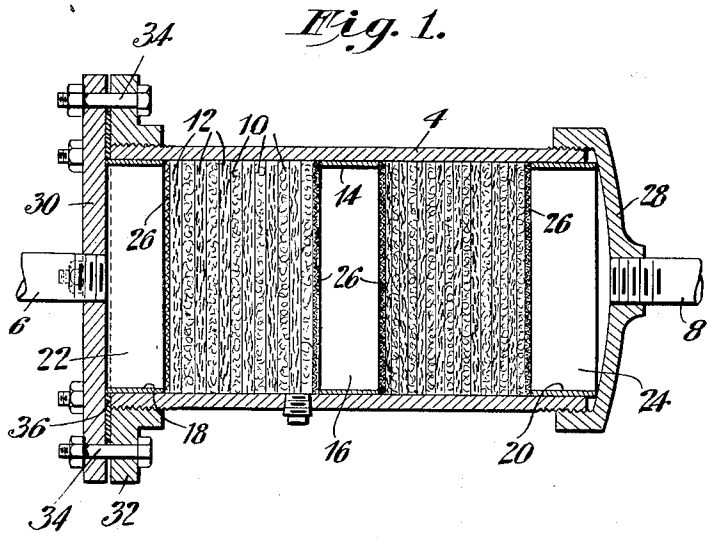

Fig. 2.

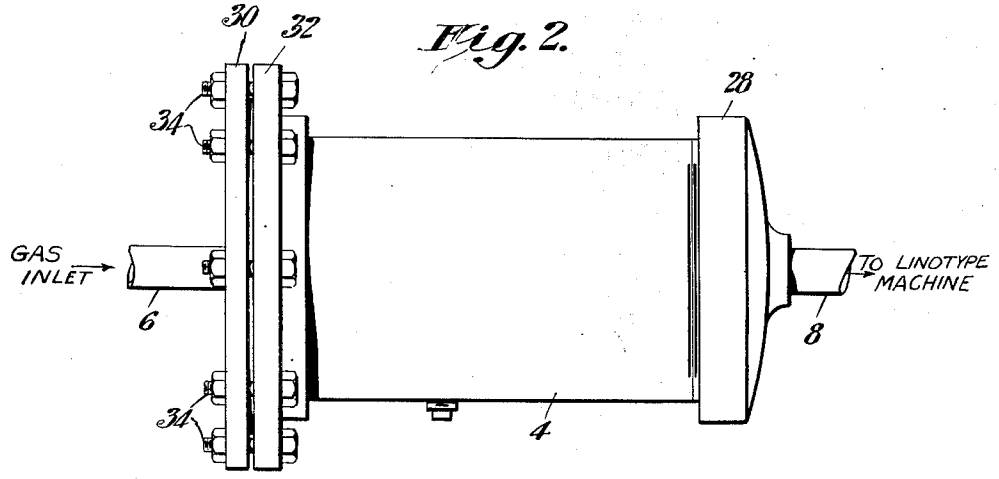

Theodore M. Foulk Inventor

By His Attorney

Edmund G. Borden

Patented May 26, 1931 1,807,521

UNITED STATES PATENT OFFICE

THEODORE M. FOULK, OF DENVER, COLORADO, ASSIGNOR TO PUBLIC SERVICE COMPANY OF COLORADO, OF DENVER, COLORADO, A CORPORATION OF COLORADO

APPARATUS FOR CLEANING GAS

Application filed July 12, 1924. Serial No. 725,701.

The present invention relates to the art of cleaning gas.

It has long been known to melt the type-metal for linotype machines by gas flame using gas from the ordinary city or town supply. An essential feature of the heating apparatus for gas burning linotype machines is a gas regulator valve for controlling the gas passing to the flame. A great deal of trouble has been experienced with the regulator valves just mentioned. In spite of the fact that the ordinary city gas is purified and cleaned very carefully, the characteristics of the regulator valves or the conditions under which they are used, or both, cause certain substances in the gas to adhere to the said regulator valves and cause them to stick.

It is the object of the present invention to provide a process for purifying gas to the degree required of fuel in linotype machines and to provide an apparatus adapted to carry out said process.

According to the present invention gas from the ordinary city supply is purified to the degree required for use in linotype machines by passing it through a number of layers of cotton-like material in series. Preferably, also the gas to be purified is passed through a number of layers of metal wool in series with the layers of cotton-like material as well as in series with each other.

The novel features of the present invention are pointed out with particularity in the appended claims. The invention itself, however, with further objects and advantages, will best be understood from the following description taken in connection with the accompanying drawings in which

Fig. 1 is a central longitudinal section of a gas purifying apparatus according to the present invention and adapted to operate in accordance with the process of the present invention.

Fig. 2 is an elevation of the apparatus illustrated in Fig. 1.

Referring to the drawings, 4 indicates a casing which can be made conveniently from a piece of heavy pipe or the like. The gas to be purified according to the present invention is passed through the casing 4, the gas entering the casing axially through pipe 6 and leaving it through pipe 8. Within casing 4 are a plurality of layers 10 of cotton batting or the like arranged perpendicular to the axis of cylinder 4. Preferably also, a plurality of layers 12 of metal wool or the like springy but fibrous material are arranged within cylinder 4 parallel and alternately to layers 10. Layers 12 of steel wool or the like serve to hold the layers of cotton-like material in position without compacting the cotton-like layers sufficiently to cause a material drop in pressure of the gas in its passage through the casing 4. The layers 10 of cotton batting or the like filter or strain or absorb the impurities from the gas. The layers 12 of metal wool have a certain filtering or straining effect of their own on the gas in addition to supporting and spacing effects on the cotton layers mentioned. The layers 12 also permit the gas pressure to equalize across the face of the following cotton layers 10 in the direction of the gas flow, thereby preventing the gas from following definite paths or "channelling" in the cotton, the filtering effect being greatly reduced if channelling occurs.

As plainly illustrated in Fig. 1, layers 10 and 12 are assembled in two groups, the groups being separated by a hollow cylindrical spacer 14 fitting against the inner face of cylinder 4 and forming a central chamber 16. Two other hollow spacers 18 and 20 are also preferably used in cylinder 4, spacer 18 forming a chamber 22 at the intake end of the cylinder 4 and spacer 20 forming chamber 24 at the outlet end of the cylinder 4. Chambers 22, 16 and 24 assist the layers 12 in their function of distributing the flow of gas evenly

over the cross-section of the cylinder 4, thereby preventing channelling.

Wire screens 26, 26 of about six mesh are used between spacers 18, 14 and 20 and the adjacent layers 10 and 12 of metal wool or cotton to distribute the pressure from the spacers to the filtering layers 10 and 12 and to support and hold the faces of the layers parallel.

At the outlet end of cylinder 4 is a head 28 into the center of which the pipe 8 is screwed. Head 28 is preferably threaded to the casing 4 as illustrated, but I do not limit myself to this. Head 28 contacts with one edge of spacer 20, thus serving to keep the internal spacers and filtering layers in proper relative position. At the inlet end of casing 4 is a head 30. In order that head 30 may be readily removed and replaced when cleaning out casing 4, it is secured to a flange 32 by bolts 34, 34, but I do not limit myself to this. Also flange 34 is illustrated as threaded to casing 4, but may be attached in other ways if desired. One edge of spacer 18 rests against head 30. Moreover, a gasket 36 is preferably employed between head 30 and flange 32.

In the operation of the gas filter above described, sticky hydrocarbon, rust from the pipes, and the like impurities are removed from the gas stream by the filtering material. In course of time, the filtering material becomes so full of impurities that it needs to be removed and fresh layers 10 and 12 substituted. In order to permit such substitution to be made without interrupting the flow of gas, two filters, such as the one illustrated, may be installed in parallel, one being available for use when the other is being cleaned. Experience has demonstrated that a gas filter, according to the present invention, should have layers 10 and 12 renewed after from three to six months' use. It will be understood, moreover, that according to the present invention, the cross-section of the casing 4 and the porosity of the filtering material are such that there is substantially no drop in pressure of the gas in its passage through the filter.

Having thus described my invention, I claim:

1. A gas filter comprising in combination a casing having end closures and a gas inlet at one end and a gas outlet at the opposite end, two hollow cylindrical spacers each contacting one of said end closures and lying in contact with the inner surface of said casing, a third spacer similar to said spacers but arranged between them within the casing, alternate layers of cotton and metal wool arranged within said casing in the path of the gas between said inlet and said outlet, and foraminous supports for said layers, the edges of said supports engaging with the ends of said spacers in planes removed from said end closures.

2. A gas filter comprising a tubular casing having a gas inlet at one end and a gas outlet at the opposite end, and a filtering unit within and spaced from the ends of said casing, said unit comprising two spaced screens between which is placed a plurality of relatively thin layers of cotton, spaced apart and supported by layers of loose metallic wool, said screens and said layers occupying planes at right angles to the direction of flow of gas through said casing.

In testimony whereof I affix my signature.

THEODORE M. FOULK.