C. A. FULLERTON.

DEAL PLATE.

APPLICATION FILED MAR. 3, 1915.

1,207,532.

Patented Dec. 5, 1916.

2 SHEETS—SHEET 1.

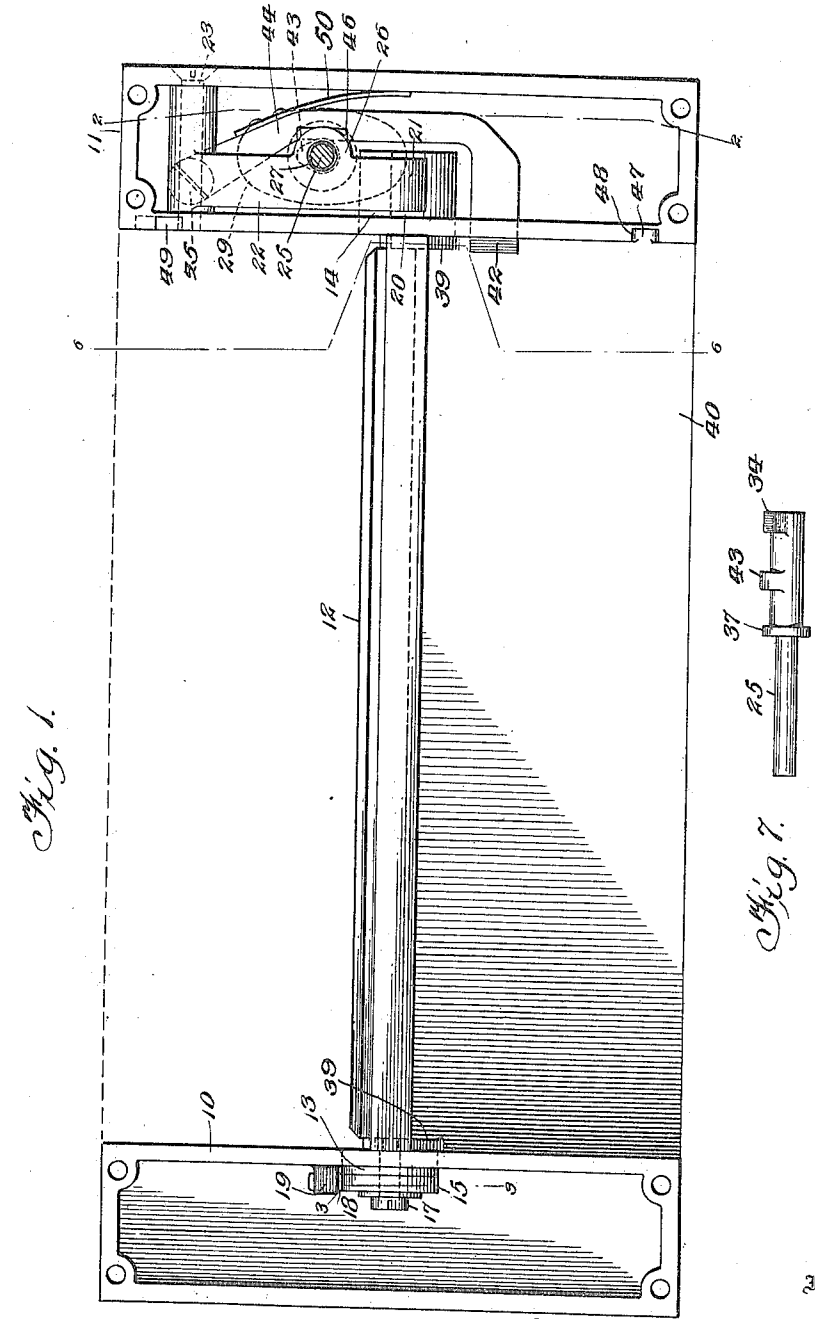

Fig. 1.

Fig. 7.

Inventor

Clarence A. Fullerton.

Witnesses

Geo. S. Thom

T. B. Hanway

By Mason Fenwick & Lawrence

Attorneys

THE NORRIS PETERS CO., PHOTO-LITHO., WASHINGTON, D. C.

C. A. FULLERTON.

DEAL PLATE.

APPLICATION FILED MAR. 3, 1915.

1,207,532.

Patented Dec. 5, 1916.

2 SHEETS—SHEET 2.

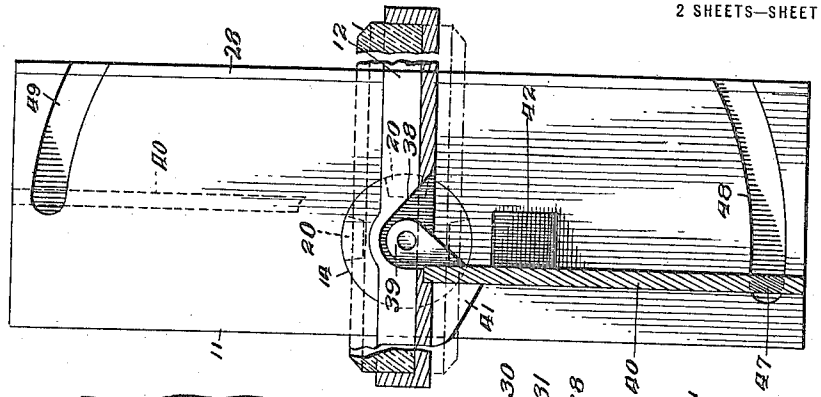

Fig. 6.

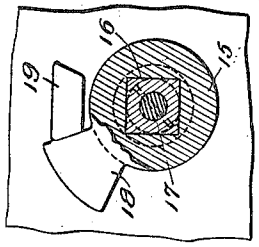

Fig. 3.

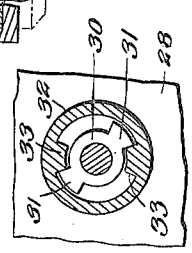

Fig. 4.

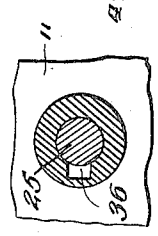

Fig. 5.

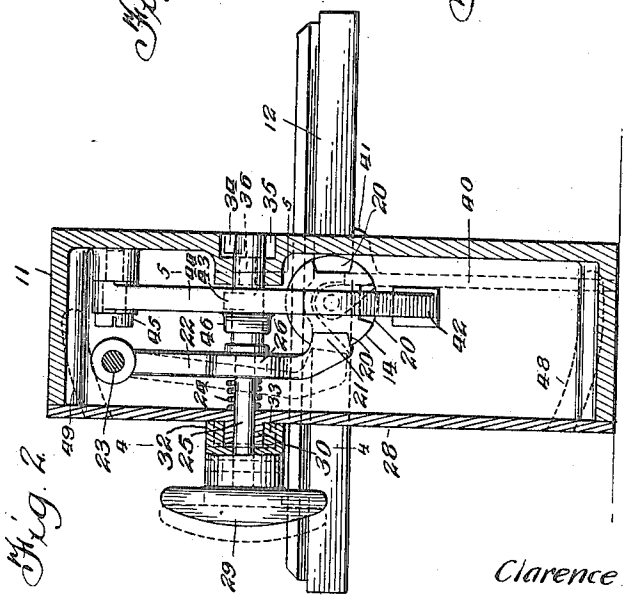

Fig. 2.

Witnesses

Fred S. Thom

B. A. Hanway

Inventor

Clarence A. Fullerton,

By Mason Fenwick & Lawrence

Attorneys

THE NORRIS PETERS CO., PHOTO LITHO., WASHINGTON, D. C.

UNITED STATES PATENT OFFICE.

CLARENCE A. FULLERTON, OF NEW YORK, N. Y.

DEAL-PLATE.

1,207,532. Specification of Letters Patent. Patented Dec. 5, 1916.

Application filed March 3, 1915. Serial No. 11,897.

To all whom it may concern:

Be it known that I, CLARENCE A. FULLERTON, a citizen of the United States, residing at New York, in the county of New York and State of New York, have invented certain new and useful Improvements in Deal-Plates; and I do hereby declare the following to be a full, clear, and exact description of the invention, such as will enable others skilled in the art to which it appertains to make and use the same.

This invention relates to deal plates for bank tellers and the like and more particularly to a deal plate which may serve as a deal plate or as a closure for the passage through which the transactions take place.

It has for an object to provide an improved form of deal plate which may be swung from a normal position to a vertical position to serve as a closure or it may be inverted to cause the opening to occur below said plate.

A further object of this invention is the improved means in mounting a movable deal plate so that it may be held in any one of a series of locked positions.

A further object of this invention is the provision of a leaf carried by the deal plate which may serve as a closure for one half of the opening formed to accommodate the deal plate when swung to vertical position.

A further object of this invention is the provision of a controlling means to limit the rotation of said deal plate.

A further object of this invention is the provision of a single stem or shaft which serves in the manipulation of the deal plate and its associated swinging leaf.

Further objects will be apparent from the following specification, appended claims and drawings in which,

Figure 1 is a front elevation of the deal plate and associated parts showing the interior of the end housings, Fig. 2 is a sectional view through one of the housings as on the line 2—2 of Fig. 1, Fig. 3 is a sectional view as on the line 3—3 of Fig. 1, Fig. 4 is a similar view as on the line 4—4 of Fig. 2, Fig. 5 is a similar view as on the line 5—5 of Fig. 2, Fig. 6 is a similar view as on the line 6—6 of Fig. 1, and Fig. 7 is an elevation of the shaft for the manipulation of the several parts.

This device is intended for use as a deal plate for tellers of banks or the like and it provides for the use of said deal plate in the double function of a deal plate when in horizontal position across which transactions may take place or when swung to vertical position, it serves as a closure for the passage through which such transactions occur and it comprises end housings in which the operative parts may be confined, between which the deal plate is swiveled.

As the teller's booth may serve either for a receiving or paying teller, it is desired to afford a deal plate which may conveniently serve for each occasion. A receiving teller in most instances desires to use the deal plate in the form of a shelf because in this condition, any paper or money placed thereon by a depositor is kept separated from other matters upon the receiving teller's counter until the receiving teller is ready to carry out the transaction, while a paying teller most frequently desires to deliver the out-going money or paper from his counter in a continuous plane as by sliding the money through the opening partly formed by the continuation of his counter and in this case, it will be through the opening caused by the inverted deal plate. It will, therefore, be seen that the reversible plate affords accommodations for the desires of either receiving or paying teller.

Referring to the drawings, there are shown housings 10 and 11 between which a deal plate 12 is pivotally mounted. The deal plate 12 has trunnions 13 and 14 thereon which extend through walls of the housings 10 and 11 of which the one which extends into the housing 10 is provided with a washer 15 which is held upon the squared end 16 of said trunnion as by a screw 17, to have a lug 18 formed on the washer 15, engage a stop 19 which is formed on the inside of the wall of the housing 10.

The trunnion 14 enters the interior of the housing 11 and this trunnion is provided with recesses 20 in one of which a nose 21 of a pawl 22 is adapted to engage. This pawl is supported by a pin 23 which passes through the opposite walls of the housing 11 and the nose of the pawl is normally held in engagement with one of the recesses 20 as by a spring 24 which is coiled about the stem 25. The pawl 22 is provided with an ear 26 and said pawl is further provided with an opening 27 through which the stem 25 passes. The stem 25 passes through the front plate 28 of the housing 11 and supports a knob 29 on the outer end by which said

stem may be moved. To limit the rotation of said knob, the plate 28 is provided with a lug 30 upon which ears 31 are formed and these ears limit the rotation of the shell 32 which is formed on the knob 29 and in which shell are the inwardly directed lugs 33. The opposite end of the stem 25 is provided with an offset 34 which rotates in the recessed portion 35 in the wall of the housing 11 and the recessed portion 35 is provided with a passage 36 through which the offset 34 may pass when the stem 25 has been rotated to cause said offset to coincide with the passage 36, at which time the handle 29 may be drawn from the plate 28 to cause the pawl 22 to compress the spring 24 and release the trunion 14. The stem 25 is formed into sections of different diameters and has a shoulder 37 formed between the two sections so that said shoulder will engage the wall of the opening 27 to actuate said pawl. The deal plate 12 is recessed as at 38 to receive lugs 39 which are formed on a leaf 40 so that said leaf swings about a center concentric with that of said deal plate. The ears 39 are supported by the inner ends of screws which pass through the trunnions 13 and 14 as shown in dotted lines and the leaf 40 is intended to have limited movement in one direction only with respect to a perpendicular to the deal plate 12. To establish this limited movement, the leaf 40 has lugs 41 formed thereon which engage the bottom face of the deal plate when the leaf has been swung perpendicular thereto. When it is desired to move the deal plate from the position shown in the drawing, it is necessary to release the leaf 40 through its connection with the deal plate and this is accomplished by withdrawing the bolt 42 from the path of the edge of said leaf. The shaft 25 in being rotated causes a cam 43 which is formed thereon to engage a face of a pawl 44 to swing the same about its pivot on the screw 45 which causes the lower end of said pawl to be retracted into the housing 11, at which time the shaft 25 may be moved longitudinally to disengage the pawl 22 from the trunnion 14 when the deal plate may be rotated as desired. The pawl 44 is provided with a spring 50 which normally keeps the bolt 42 extended and said pawl is further provided with an ear 46 against which the cam 43 bears when the stem 25 is moved longitudinally. The leaf 40 is provided with a lug 47 which enters the arcuate grooves 48 and 49 in the housing 11 so that when said lug reaches the end of the grooves its movement is limited against further motion in that direction.

The deal plate is shown in the horizontal position in the drawings and has the leaf 40 locked in vertical position to close the lower half of the opening. In this position the upper face of the deal plate serves for the reception of money or papers in passing from the teller's booth to another party or vice versa. When it is desired to close the opening it is only necessary to rotate the stem 25 and to move the same longitudinally when the leaf 40 and the deal plate have freedom of movement so that said deal plate may be turned on its swivel to cause another of the recesses 20 to receive the nose 21. If so desired, the deal plate may be inverted to cause the leaf 40 to close the upper half of the passage and to allow transactions to take place through the lower half of the opening. It is understood that the housings 10 and 11 will be securely held in the partition and that the upper and lower edges of the opening are spaced at such intervals as to allow the deal plate 12 to form a substantial closure for said opening when it is desired.

Various modifications may be made within the scope of this invention without departing from the spirit thereof, and the drawings are submitted for illustrative purposes only.

Having thus described my invention, I claim:—

1. In a deal plate of the class described, a swiveled plate, trunnions formed on said swiveled plate, housings to receive said trunnions, one of said trunnions having portions of its periphery recessed, a pawl carried by one of said housings to engage in any one of said recessed portions of said trunnions, a stem slidably and rotatably carried by said housing, an enlargement formed on said stem to disengage said pawl from the recessed portion of said trunnion, an angular projection from one end of said stem, and said housing having a slotted socket formed therein to receive said stem and its angular projection in a portion of the longitudinal movement of said stem.

2. In a deal plate of the class described, a swiveled plate, trunnions formed thereon, one of said trunnions having portions thereof recessed, housings to receive said trunnions, a spring pressed pawl carried in said housing to engage the recessed portion of said trunnion, a swinging leaf carried by said swiveled plate, a second pawl carried by said housing to limit the movement of said swinging leaf, and a stem carried by said housing having a longitudinally and rotatable movement to actuate the pawls for releasing the trunnion and swinging leaf.

3. In a deal plate of the class described, a swiveled plate, trunnions formed thereon, a swinging leaf carried by said swiveled plate, lugs formed on said swinging leaf to engage said swiveled plate, and limiting a swinging motion of said leaf in one direction, said swiveled plate being capable of being swung from horizontal to vertical or inverted position, said swinging leaf form-

ing a closure for a portion of the opening when said swiveled plate is in horizontal or inverted position and locking pawls for engaging one of said trunnions of said swiveled plate, and said swinging leaf in certain positions thereof.

4. In a deal plate of the class described, a swiveled plate, trunnions formed thereon, housings adapted to receive said trunnions, one of said trunnions having recessed portions thereon, a pawl carried by one of said housings adapted to engage the recessed portions of said trunnions, a rotatable and longitudinally movable stem carried by said housing, a swinging leaf having lugs formed thereon pivotally secured to said swiveled plate having limited swinging motion in one direction, a second pawl carried by said housing to engage said swinging leaf in one position thereof, a cam formed on said stem carried by said housing, said stem having a limited rotary movement, a locking means for said stem against longitudinal movement of said stem except in one position thereof, and said stem releasing said pawls by longitudinal and rotary motion to free said swiveled plate and swinging leaf for adjustment.

5. In a deal plate of the class described, a swiveled plate, trunnions formed thereon, housing to receive said trunnions, locking means carried by said housings for said trunnions, a swinging leaf carried by said swiveled plate, locking means carried by said housing for said swinging leaf in one position, and stops carried by said housing for said swinging leaf in the limit of its swing in each direction.

In testimony whereof I affix my signature in presence of two witnesses.

CLARENCE A. FULLERTON.

Witnesses:

L. A. RUSHWORTH,

E. H. SCHUTT.

Copies of this patent may be obtained for five cents each, by addressing the "Commissioner of Patents, Washington, D. C."