Sept. 8, 1936. E. G. GOODWIN 2,053,990

ANTIOSCILLATING DEVICE

Filed Sept. 13, 1930 2 Sheets-Sheet 1

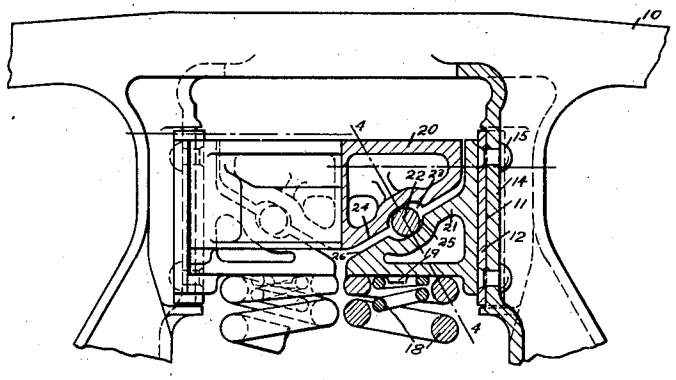

Fig. 1

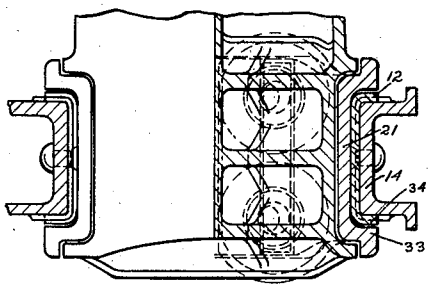

Fig. 2

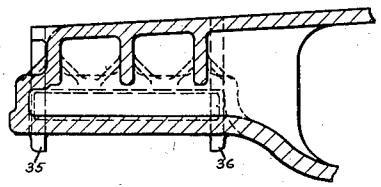

Fig. 3

INVENTOR
E. G. GOODWIN

BY H. H. Snelling

ATTORNEY

Sept. 8, 1936. E. G. GOODWIN 2,053,990

ANTIOSCILLATING DEVICE

Filed Sept. 13, 1930 2 Sheets-Sheet 2

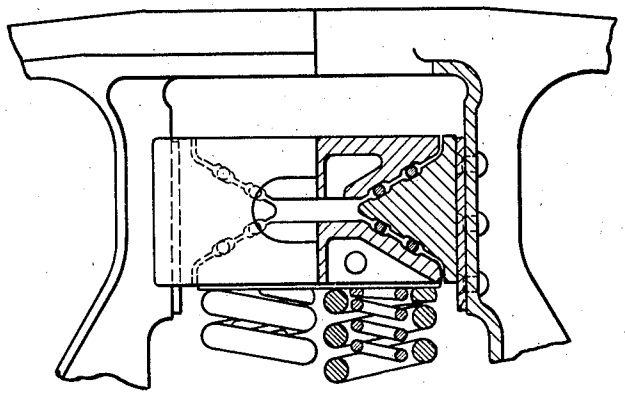

Fig. 6

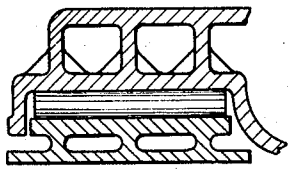

Fig. 4

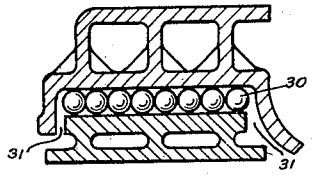

Fig. 5

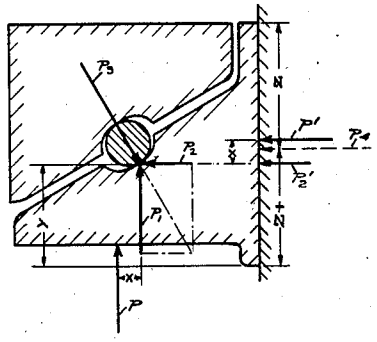

Fig. 7

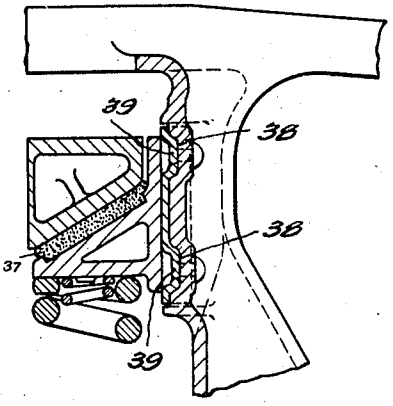

Fig. 8

INVENTOR
E. G. GOODWIN
BY
H. H. Snelling
ATTORNEY

Patented Sept. 8, 1936 2,053,990

UNITED STATES PATENT OFFICE

2,053,990

ANTI-OSCILLATING DEVICE

Ernest G. Goodwin, Pelham, N. Y., assignor to Standard Coupler Company, New York, N. Y., a corporation of New Jersey

Application September 13, 1930, Serial No. 481,764

24 Claims. (Cl. 105—193)

This invention relates to anti-oscillating devices and has for its principal object the provision of a railway bolster damper which will allow the column pressures to be more nearly proportional to the vertical load than is possible in the type where the bolster has direct frictional contact with the shoes which slide vertically between the columns of the side frame of the truck.

A further object of the invention is the provision of a truck structure in which the shoes act as spring seats and have anti-friction contact with the bolster ends, using either rollers or balls, the latter providing lateral motion which motion is rather impractical when using rollers.

In ordinary bolster construction there is always a tendency for the cars to rock excessively whether loaded or not, this tendency arising whenever the speed of the car is such that the side to side rock of the car is timed with respect to low places in the rails, in other words, whenever a wheel passes over a low place the spring is expanded and there naturally follows a rocking of the car toward the expanded spring. At some definite speed of car travel the oscillation will be complete in time to meet the next low point and this will add to the amount of rocking until, in extreme cases, the springs are brought solid, damaging not only them, but other portions of the car. This matter is set forth rather fully in my pending application, Serial No. 356,253, filed April 18, 1929, entitled Bolster damper, and of which the present application is a continuation-in-part and in general, except for Figure 6, is an improvement over the preferred form of the earlier application.

In the drawings:

Figure 1 is a side elevation partly in vertical section.

Figure 2 is a horizontal section taken in part just above the bolster and in part just below the top plate of the bolster.

Figure 3 is a vertical section substantially on the transverse center line of the bolster.

Figure 4 is a section taken on the sloping plane 4—4 of Figure 1.

Figure 5 is similar to Figure 4 but shows balls instead of rollers.

Figure 6 is a modified form.

Figure 7 is a vertical section thru a shoe.

Figure 8 is a modified form generally similar to Figure 1.

The side frame 10 of the truck is of substantially standard type save for the fact that it is recessed at 11 to receive a liner 12 secured to the column 14 as by the rivets 15. This slight modification from standard practice offers no obstacle whatsoever to interchangeability because the outside horizontal dimensions of the liner agree perfectly with the approved dimensions of the standard column so that my modified side frame can be used with any approved bolster and it might also be mentioned at this point that the bolster itself while quite different from ordinary practice is thoroughly interchangeable as far as size is concerned, that is, it can be used in any standard truck side frame when accompanied by its shoes, provided that the car is not loaded to a greater extent than the side frame columns can stand, remembering that with the anti-oscillating device of the present invention there is an additional load imposed upon the column above those present with the previous designs.

Instead of the bolster 20 directly engaging the supporting springs 18 I provide between the bolster and the springs a shoe 21 having a vertical channel-shaped face slidingly engaging the liner 12 and having ball or roller contact with the bolster end. The bosses 19 are shaped with clearance toward the columns so that the shoes may move outwardly as wear takes place without causing the springs to tilt away from each other at their tops. The clearance may be provided by giving the bosses 19 an elliptical shape with the major axis parallel to the liner face as shown in the plan view Figure 2. See also Figure 1 which shows the boss 19 to the left of the axis of the springs 18. As the shoe and liner surfaces wear away the center of the boss 19 will approach the axis of the springs. In the form shown in Figures 1–4 the non-friction member is a roller 22, the drawings illustrating only one roller on each sloping face of the bolster end altho obviously four or even more of the rollers could be used at each bolster end, the principal objection to the greater number being that by the use of only two of the rollers as illustrated a better provision is made for warping of the truck, and positioning horizontal thrust on the side frame columns and shoe faces, and these advantages appear to be more important than the advantages which would accrue if four or more rollers were used per end. The rollers 22 are confined in alined recesses 23 in the bolster sloping face 24 and recess 25 in the corresponding sloping face 26 of the shoes. To allow for the natural wear at the side of each of the two shoes recesses 23 and 25 are formed slightly wider from side to side than momentarily required and not precisely opposite each other.

It will be seen from Figure 1 that the column

pressures will be closely proportional to the vertical load, the friction between the bolster and the shoe being substantially negligible, so that an increase in downward pressure on the top of the bolster would cause the axes of the two rollers 22 and shoes 21 to move outward from the transverse center of the bolster and this will cause an increased pressure between the shoe 21 and the liner 12.

In the modified form in Figure 5 a number of balls 38 are substituted for each of the rollers 22, the action being generally the same save that since the balls also provide for lateral motion of the bolster relative to the truck frame which motion however is impractical when rollers are used. The clearance at each lateral side of the shoe, i. e., at 31, and the clearance between the bolster and the angular ends 33 and 34 of the shoe can be made any preferred amount, whereas these clearances, particularly those between the flanges of the shoe and bolster, should be held at a minimum whenever the rollers are used in order that the longitudinal slip on the roller shall be kept down to as small an amount as manufacturing practice will permit, and this in turn is taken care of by governing the distance between the outside vertical flanges 35 and 36 of the bolster, between which flanges the channel-shaped section of the shoes 21 are received.

In Figure 7 the load P is the spring load which is naturally centered at the axis of the spring. On account of friction against the column this spring will support a load greater than P or P—1 on a stationary or downward stroke due to the friction between the shoe and the column. P—2 is the horizontal component of P—1 and the resultant of these two loads is P—3, P—3 being the load on the roller and which, of course, is more than the load to be supported. P—2' with the indicated position of the roller is slightly below midway of the friction face, and unless combined with some other force it would cause uneven wear of the shoe and liner. By arranging the load P slightly to the left of roller contact with the shoe a clockwise motion of the shoe is set up which is counteracted by load P'. The result of load P' and P—2' is equivalent to P—4, both in amount and location, at Z distance from the top of the shoe and Z+ distance from the bottom of the shoe. This will mean a slight tendency for the shoe to wear faster at the top than at the bottom, but on the other hand the shoe engages the column lower down when the pressures are greatest and therefore would tend to wear the liner more at the bottom. If this proportion is just right the face against which the spring reacts will remain horizontal, and since both the shoe and liner are readily renewable the proper alignment can be maintained. The load P—1 on the downward stroke is substantially equal to the spring value P, plus 25% of load P—4 depending on the co-efficient of friction between the shoe and the liner. On the rebound load P—1 would be spring value P minus about 25% of P—4 or, reduced to figures and assuming the load on the spring to be 25,000#, P—1 will be 35,500# on the down stroke and 14,500# on the rebound. This will effectively prevent accumulative rocking, over-solid spring loads, and other causes for rough riding. The center of reaction on the column can be raised or lowered by increasing or decreasing either distance X or distance Y or both, and the pressure on the column can be increased or decreased by changing the distance X and also by changing the slope of the roller seats.

While in practice it has been found that the rivets which hold the liner to the column are sufficient to hold the liner in place I rather prefer to cup the column as at 38 and to provide the liner with bosses 39 which snugly fit into the recess 38 which are preferably slightly conical. The rivets then pass thru the boss and the wall of the recess but in this case the fit between the boss and the recess prevents any possible relative movement between the liner and the column as the shoe slides against the column and obviously there is no possible shearing action on the rivets. This construction is actually used in all the modifications but for convenience of illustration the liners in the other forms are shown in their simplest type.

In Figure 8 pads 37 composed of a resilient material such as relatively hard rubber are used between the bolster ends and the shoes instead of rollers or balls. Such construction not only permits the shoes to readily adjust themselves to proper engagement with the side frame columns but also provides additional cushioning of both vertical and longitudinal loads. The rubber will readily allow or provide the necessary slight movements for the two shoes to snugly engage the columns and without actual movement between the rubber face and the shoe or bolster.

What I claim is:

1. In a truck, a side frame, a spring supported bolster having oppositely sloping walls near the ends, means for frictionally engaging the frame upon application of vertical pressure to the bolster, and means having rolling engagement with the last mentioned means and with the sloping bolster walls.

2. A bolster having at its bottom at each end a pair of walls sloping upwardly and outwardly from the central plane of the bolster and having roller receiving recesses in said bottom walls.

3. In a truck, a side frame, a bolster, springs for supporting the bolster on the truck, a spring seat having a side face frictionally engaging the side frame, and balls mounted between the spring seat and the bolster.

4. In an anti-oscillating support, a friction surface, a member spring pressed to move in a direction parallel to said surface, a load carrier, a rolling element between the load carrier and the member engaging walls of each, which walls slope with respect to the friction surface so as to cause the friction surface to be engaged by the member to absorb a portion of the load, the distance from the point of contact between the rolling element and the spring pressed member to the friction surface being other than the distance from the friction surface to the center of reaction between the spring and the member.

5. In an anti-oscillating support, a friction surface, a member spring pressed to move in a direction parallel to said surface, a load carrier, a rolling element between the load carrier and the member engaging walls of each, which walls slope with respect to the friction surface so as to cause the friction surface to be engaged by the member to absorb a portion of the load, the distance from the point of contact between the rolling element and the spring pressed member to the friction surface being less than the distance from the friction surface to the center of reaction between the spring and the member.

6. In an anti-oscillating support, a friction

surface, a member spring pressed to move in a direction parallel to said surface, a load carrier, a rolling element between the load carrier and the member engaging walls of each, which walls slope with respect to the friction surface so as to cause the friction surface to be engaged by the member to absorb a portion of the load, said surface being vertical, and the point of contact between the rolling element and the vertically moving member being offset with respect to the center of the spring so that the pressure on the friction surface is equalized.

7. In a truck, a side frame column having a vertical friction face, a spring pressed shoe having a vertical friction face and a sloping face, a bolster having a sloping face parallel with the sloping face of the shoe, a rolling element engaging said sloping parallel faces of the shoe and bolster, the point of contact between the element and shoe being nearer the bottom than the top of the vertical face of the shoe so as to throw the load toward the bottom of the shoe and being nearer the vertical face of the shoe than is the center of pressure of the spring so as to throw the load toward the top of the shoe, whereby the pressure between the shoe and column is equalized.

8. In an anti-oscillating device, a side frame column, a bolster, a shoe between the bolster and the column and adapted to frictionally engage the column to dampen rocking, means between the bolster and the shoe to permit relative motion, and a liner between the shoe and column, said liner and column having snug fitting bosses and recesses to prevent relative movement between the liner and column as the shoe slides against the liner.

9. In a truck, a side frame, a bolster, a plurality of spring supported shoes each engaging the bolster and a column wall of the frame opposed parallel walls on the bolster and shoes sloping upwardly and outwardly from the centerline of the bolster, a plurality of rolling elements engaging said sloping walls, the points of rolling contact between the elements and the sloping walls of the shoes being such that the upper portions of the shoes tend to tilt away from each other to counteract the tendency of the bottoms of the shoes to tilt away from each other under heavy load.

10. The device of claim 9 in which the rolling elements are cylinders, the lines of contact of the cylinders with the bolster being nearer together than the lines of contact between the cylinders and the shoes.

11. A friction shoe having an elliptical boss to project into the supporting spring to allow the shoe to move outwardly as wear takes place without tipping the spring.

12. In a truck, a side frame having two parallel columns, a pair of spring supported shoes each engaging one of the columns and each having a sloping face directed downwardly toward the center of the truck, a bolster having two sloping faces each sloping downwardly from the column toward the center line of the bolster, and a yielding pad between the bolster and each shoe, said pad permitting the shoes to adjust themselves to proper engagement with the columns and also providing additional cushioning of both vertical and longitudinal loads.

13. In a truck, a side frame, a bolster, springs for supporting the bolster on the truck, a spring seat, means frictionally engaging the side frame, and rollers between said means and the seat and also between said means and the bolster.

14. A device for preventing sticking of a snubbing member due for example to irregularities in parallelism of the faces of the opening of a side frame, comprising the combination with a side frame having a bolster receiving opening with opposite, substantially vertical walls, a bolster end extending within said opening and resiliently supported upon said side frame, and a snubbing member with a vertical friction face and a second face sloping with respect to the walls of the opening for changing vertical forces into horizontal pressure on the friction face, of yielding means engaging said second face of the snubbing member to prevent locking of the friction face of the snubbing member.

15. In a car truck, side frames having bolster columns, a bolster, bolster springs supported by said side frames and indirectly supporting the ends of said bolster and means interposed between said springs and said bolster permitting lateral motion of said bolster relative to said side frames and at the same time acting against said columns to damp the action of said springs as they are compressed.

16. In a car truck, side frames having bolster columns, bolster springs supported on said side frames, wedge members resting on said springs and bearing against said columns, said wedge members having inclined surfaces, balls resting on said inclined surfaces, a truck bolster having surfaces at its ends facing said inclined surfaces, the said facing surfaces of said bolster resting on said balls, said balls cooperating with said inclined surfaces to tend to move said wedge members closer towards said columns as said springs are increasingly compressed while permitting lateral motion of said bolster relative to said side frames.

17. In a car truck, side frames having bolster columns, bolster springs supported by said side frames, wedge members resting on said springs and bearing against said columns, said wedge members having inclined surfaces extending diagonally upwardly and toward the respective ends of said side frames from adjacent the central vertical transverse plane of the truck, balls supported on said inclined surfaces, a truck bolster having surfaces at its ends facing said inclined surfaces, said balls bearing against said opposing surfaces of said truck bolster and supporting the ends of said bolster to permit of lateral motion of the bolster relative to the side frames and at the same time to force said wedge members into tighter frictional engagement with said columns as said springs are increasingly compressed.

18. In a car truck, side frames having bolster columns, bolster springs supported by said side frames, wedge members resting on said springs and bearing against said columns, said wedge members having inclined surfaces extending diagonally upwardly and toward the respective ends of said side frames from adjacent the central vertical transverse plane of the truck, said inclined surfaces having ball recesses formed therein, balls disposed within said recesses, a truck bolster, the ends of which have surfaces opposing said inclined surfaces of said wedge members, said opposing surfaces of said bolster resting on said balls whereby lateral motion of the bolster relative to the side frames is permitted and at the same time said balls will force said wedge members into tighter frictional engage-

ment with said columns as forces are applied to said spring to increasingly compress the same.

19. In a car truck, side frames having bolster columns, bolster springs supported by said side frames, wedge members resting on said springs and bearing against said columns, said wedge members having inclined surfaces extending diagonally upwardly and toward the respective ends of said side frames from adjacent the central vertical transverse plane of the truck, said inclined surfaces having ball recesses formed therein, balls disposed within said ball recesses, a truck bolster having ends provided with recessed surfaces opposing said recessed surfaces of said wedge members, said balls fitting within the recesses of said bolster and supporting the ends of said bolster to permit of lateral motion of the bolster relative to the side frames, and at the same time force said wedge members into tighter frictional engagement with said columns as said springs are increasingly compressed.

20. In a car truck, side frames having bolster columns, wear plates lining said columns, bolster springs supported by said side frames, wedge members resting on said spring and abutting said wear plates, said wedge members having inclined surfaces extending diagonally upwardly and outwardly toward the respective ends of said side frames from adjacent the inner edges of said wedge members, balls supported on said inclined surfaces and a truck bolster having surfaces at its ends facing the inclined surfaces of said wedge members, said facing surfaces of said bolster resting on said balls.

21. A bolster having at its bottom at each end a pair of walls sloping upwardly and outwardly from the central plane of the bolster and having a recess in one of said bottom walls to receive a rolling element.

22. In a car truck, side frames having bolster columns, a bolster, bolster springs supported by said side frames and indirectly supporting the ends of said bolster, and means interposed between said springs and said bolster permitting lateral motion of said bolster relative to said side frames and said springs and at the same time acting against said columns to damp the action of said springs as they are compressed.

23. In a device of the character described, a car supporting member, a pair of shoes for dampening vertical movement of said member, and rolling means for permitting lateral movement of the member with respect to the shoes.

24. In a device of the character described, a bolster end, a side frame having a central opening within which the bolster end is positioned, a pair of shoes frictionally engaging the side frame, and means between the bolster and the shoes for urging the shoes against the side frame to dampen the up and down movement of the bolster end, said means also providing lateral movement of the bolster upon the shoes.

ERNEST G. GOODWIN.