H. SWAIN.

AUTOMATIC PHONOGRAPH.

APPLICATION FILED AUG. 2, 1917.

1,422,321.

Patented July 11, 1922.

6 SHEETS—SHEET 1.

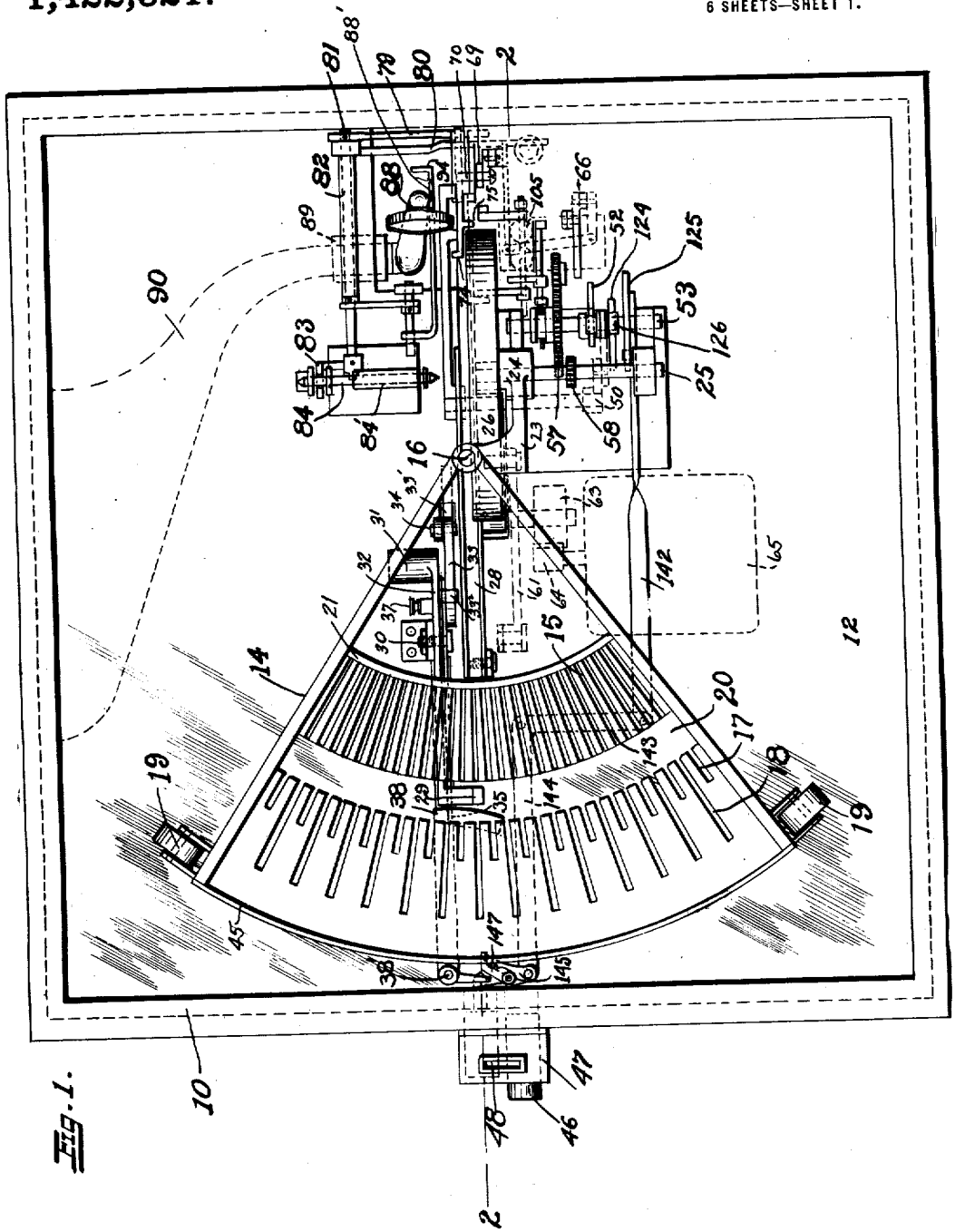

Fig. 1.

Inventor
Hadwen Swain
By Strong & Townsend
Attorneys.

H. SWAIN.

AUTOMATIC PHONOGRAPH.

APPLICATION FILED AUG. 2, 1917.

1,422,321.

Patented July 11, 1922.

6 SHEETS—SHEET 2.

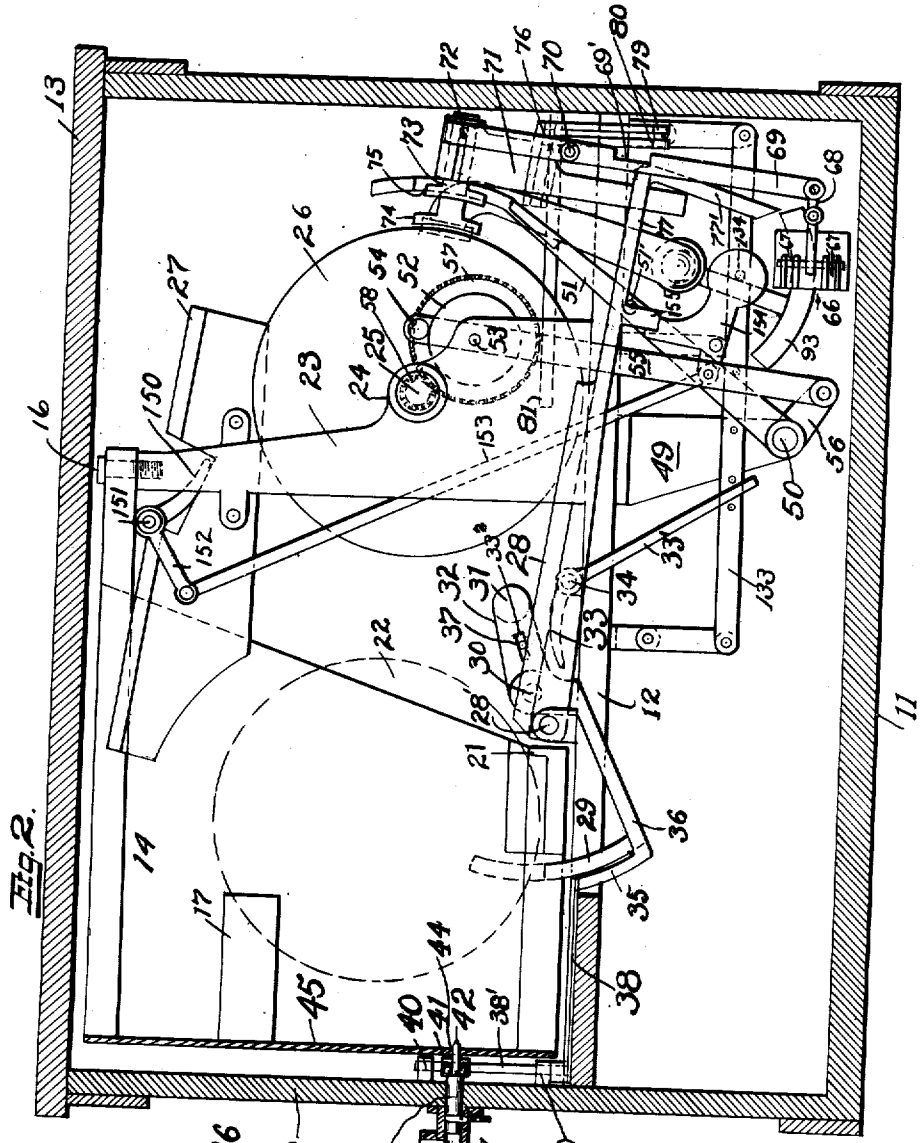

Fig. 2.

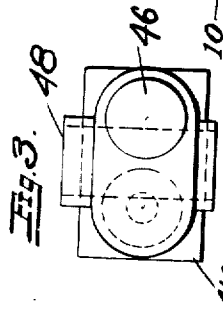

Fig. 3.

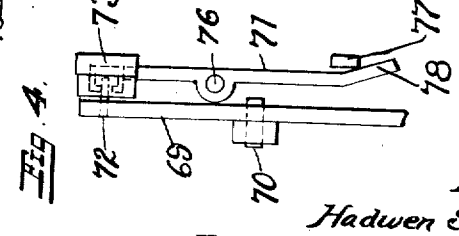

Fig. 4.

Inventor
Hadwen Swain
By Strong & Townsend
Attorneys.

H. SWAIN.

AUTOMATIC PHONOGRAPH.

APPLICATION FILED AUG. 2, 1917.

1,422,321. Patented July 11, 1922.

6 SHEETS—SHEET 3.

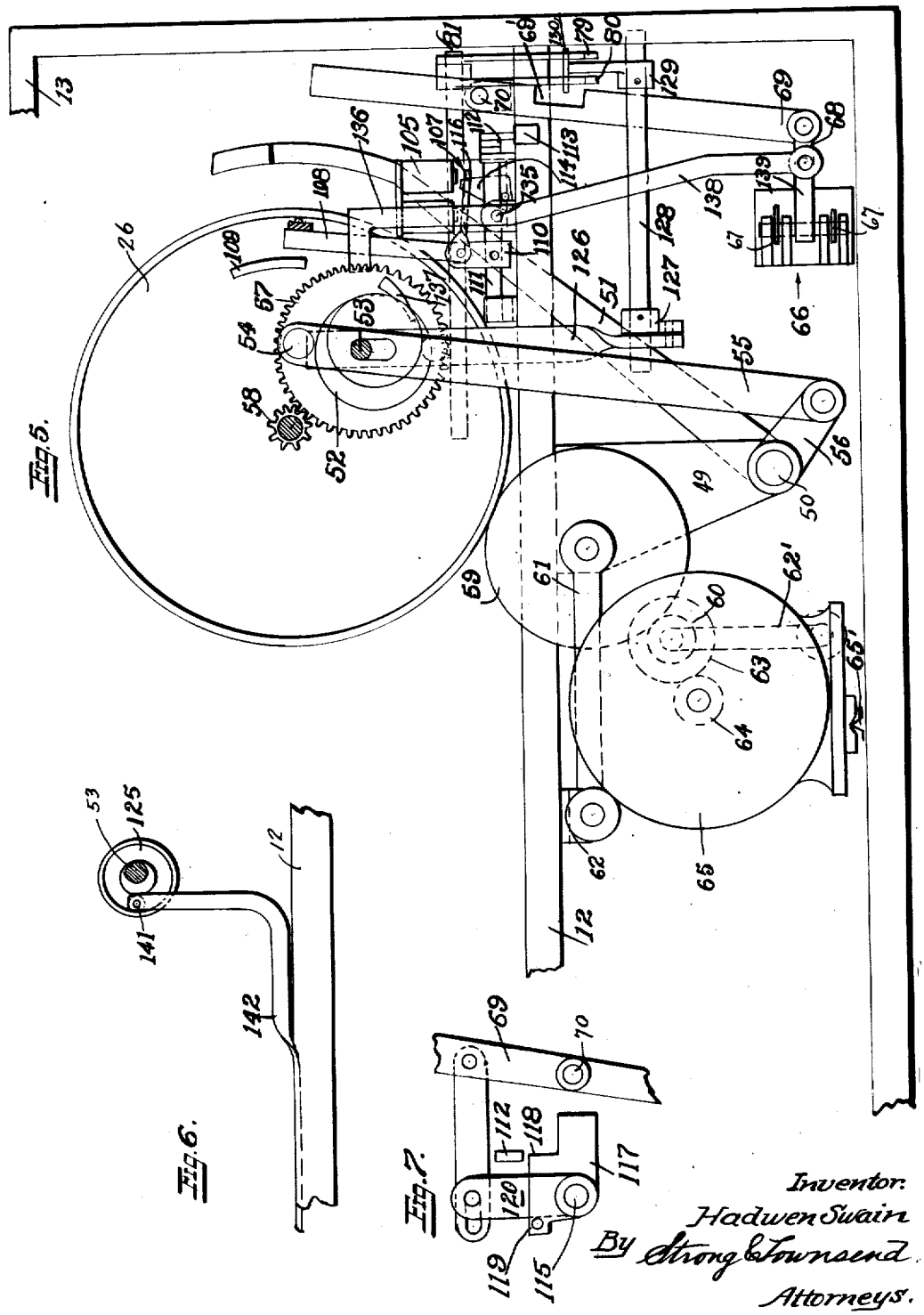

Fig. 5.

Fig. 6.

Fig. 7.

Inventor:
Hadwen Swain
By Strong & Townsend.
Attorneys.

H. SWAIN.

AUTOMATIC PHONOGRAPH.

APPLICATION FILED AUG. 2, 1917.

1,422,321. Patented July 11, 1922.

6 SHEETS—SHEET 4.

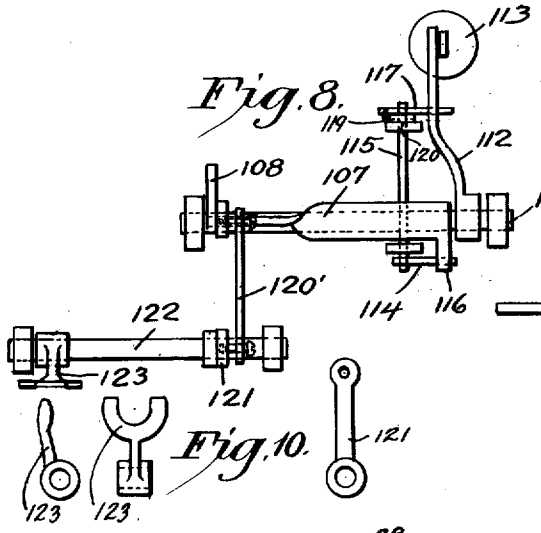

Fig. 8.

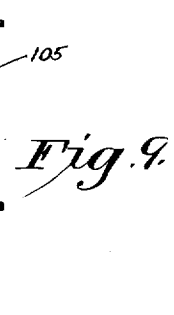

Fig. 9.

Fig. 10.

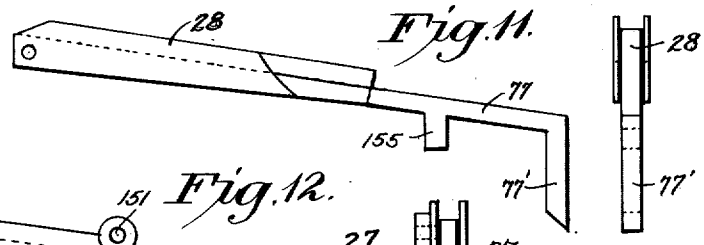

Fig. 11.

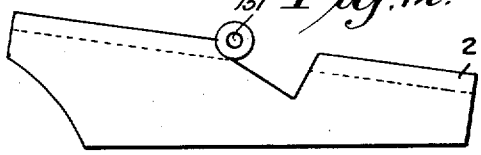

Fig. 12.

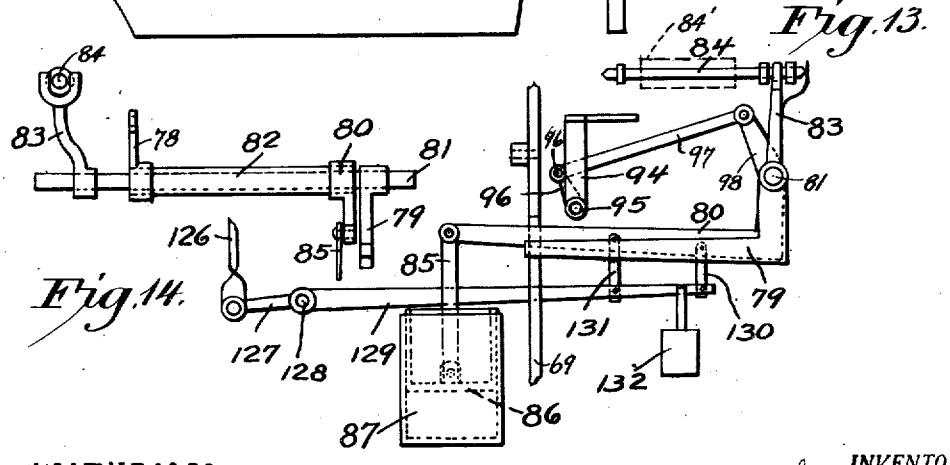

Fig. 13.

Fig. 14.

WITNESSES:

Clarkson Swain

O. A. Eggers

INVENTOR.

Hadwen Swain

H. SWAIN.

AUTOMATIC PHONOGRAPH.

APPLICATION FILED AUG. 2, 1917.

1,422,321.

Patented July 11, 1922.

6 SHEETS—SHEET 5.

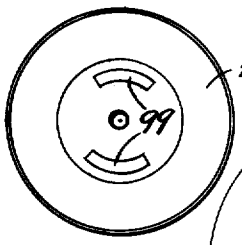

Fig. 17.

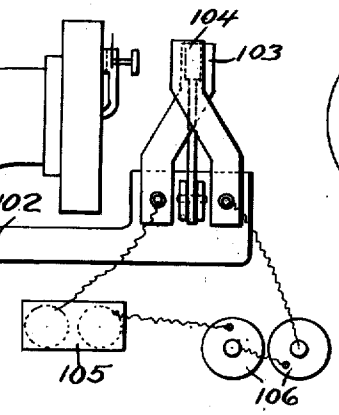

Fig. 15.

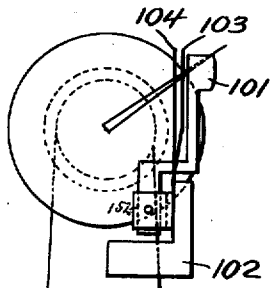

Fig. 16.

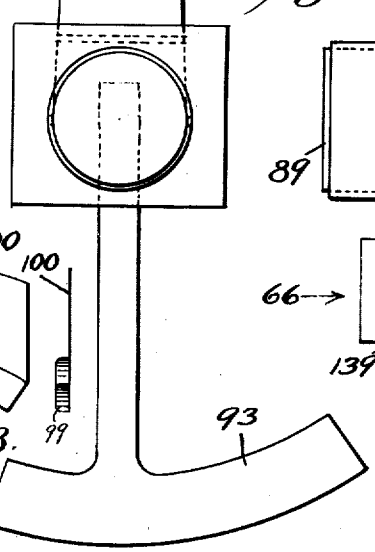



Fig. 18.

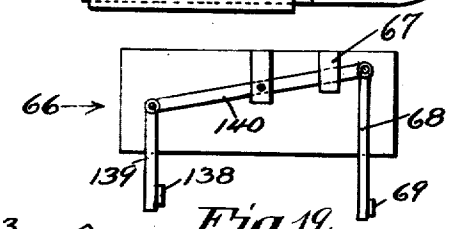

Fig. 19.

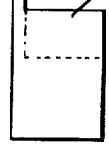

WITNESSES:

Clarkson Swain

O. A. Eggers

INVENTOR.

Hadwen Swain

H. SWAIN.

AUTOMATIC PHONOGRAPH.

APPLICATION FILED AUG. 2, 1917.

1,422,321. Patented July 11, 1922.

6 SHEETS—SHEET 6.

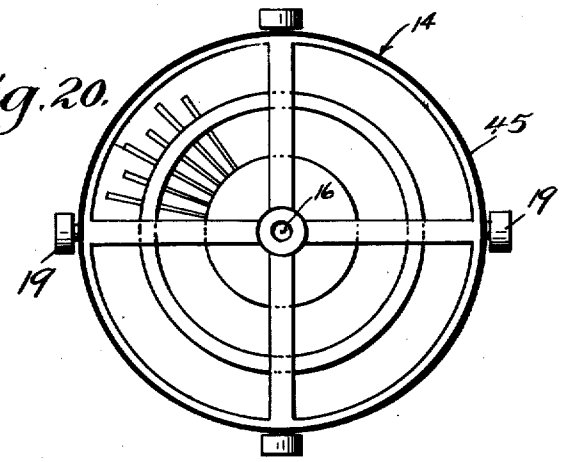

Fig. 20.

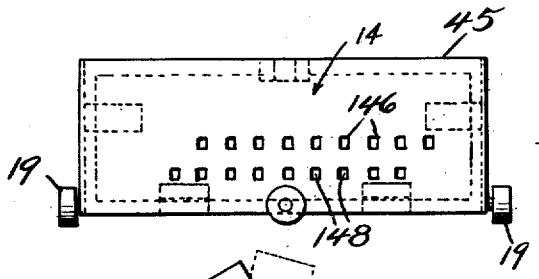

Fig. 21.

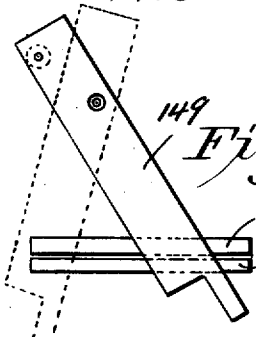

Fig. 22.

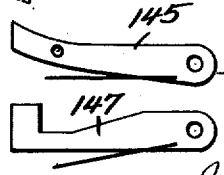

Fig. 23.

Fig. 24.

WITNESSES:

Clarkson Swain.

O. A. Eggers

INVENTOR.

Hadwen Swain

UNITED STATES PATENT OFFICE.

HADWEN SWAIN, OF SAN FRANCISCO, CALIFORNIA.

AUTOMATIC PHONOGRAPH.

1,422,321. Specification of Letters Patent. Patented July 11, 1922.

Application filed August 2, 1917. Serial No. 184,101.

To all whom it may concern:

Be it known that I, HADWEN SWAIN, a citizen of the United States, residing at San Francisco, in the county of San Francisco, State of California, have invented certain new and useful Improvements in Automatic Phonographs, of which the following is a specification.

This invention relates to an automatic phonograph.

It is the principal object of this invention to provide a phonograph adapted to be actuated to consecutively or selectively play a series of phonograph records.

The invention contemplates the use of a disk magazine which operates in conjunction with a mechanism for selectively removing the disks from the magazine and placing them in playing relation to a reproducing mechanism for consecutive or continuous playing, thereafter restoring the disk to the magazine after the playing operation and discontinuing the operation of the motor by which the entire apparatus is driven, said mechanism also embodying means for automatically adjusting the tone arm to records of varying diameters.

The invention is illustrated by way of example in the accompanying drawings, in which—

Fig. 1 is a view in plan disclosing the phonograph case within which is positioned the disk magazine, the reproducer mechanism and the timing apparatus connecting the magazine and said mechanism.

Fig. 2 is a view in vertical section as seen on the line 2—2 of Fig. 1, particularly disclosing the mechanism for controlling the disks and whereby they are transferred from the magazine to the turn table and thereafter returned.

Fig. 3 is an enlarged view in plan illustrating the coin control mechanism.

Fig. 4 is a view in end elevation illustrating the stop arm for receiving the records and further disclosing the manner in which this arm is oscillated to accommodate records of various diameters.

Fig. 5 is an enlarged fragmentary view illustrating the timing mechanism of the apparatus.

Fig. 6 is an enlarged view in side elevation illustrating the cam by which the magazine escapement is operated.

Fig. 7 is a view disclosing the gear latch mechanism.

Fig. 8 is a fragmentary view in plan illustrating the disk return mechanism.

Fig. 9 is an enlarged view disclosing the magnet by which the disk return is effected.

Fig. 10 is a view in elevation illustrating the shifting yoke used in the disk return mechanism.

Fig. 11 discloses views in side and end elevation of the lower disk runway.

Fig. 12 discloses views in side and end elevation of the upper disk runway.

Fig. 13 is a view in elevation illustrating the disk centering mechanism as seen transversely of the machine.

Fig. 14 is a view in elevation illustrating the connecting members by which the centering pin is operated, as shown in Fig. 13.

Fig. 15 is an enlarged view of the reproducing arm and the contact members carried thereby as well as the electrical connections to said contact members.

Fig. 16 is a view in end elevation of the reproducer arm.

Fig. 17 is a diagrammatic view of a phonograph disk proper with the stop members which the present invention requires.

Fig. 18 discloses views in plan and side elevation of the stop member which is applied to the phonograph disk.

Fig. 19 is a view of a switch member.

Fig. 20 is a view in plan illustrating a circular disk magazine.

Fig. 21 is a view in elevation illustrating the ratchet holes therealong.

Fig. 22 is a view illustrating a lock plate in its operative and inoperative positions.

Fig. 23 is a view in elevation illustrating the magazine feed pawl.

Fig. 24 is a view in elevation illustrating the magazine lock pawl.

Referring more particularly to the drawings, 10 indicates a case, here shown as rectangular in plan, and within which a phonograph mechanism is positioned. This case has a bottom wall 11, an intermediate horizontal wall 12 and a cover 13. The major portion of the present mechanism is mounted upon, or suspended from, the intermediate floor 12. Upon this floor is positioned a disk magazine 14, shown in Fig. 1 as describing a sector of a circle and in Fig. 20 as describing a complete circle. This magazine is formed with a series of spaced guide fingers 15, having radial faces concentric with the pivot 16.

In register with these fingers are rack slots

17 and 18 which are intended to accommodate records of different diameters. In the present instance, the slots 17 are provided for ten-inch records and the slots 18 for twelve-inch records. The magazine 14 as pivoted upon the pin 16 may swing over the floor 12 and is supported thereupon by means of casters 19. The magazine is also formed with a floor 20 upon which the record disks rest when in register with the fingers 15 and the respective slots 17 and 18. The forward edge of this floor is formed with a vertically extending ledge 21 which is arcuate in plan and forms a barrier for the records 22 when they are carried by the magazine. The pivot pin 16 is particularly shown in Fig. 2 as mounted within the upper end of a standard 23. This member is fixed upon the floor 12 and also carries a bearing 24 rotatably supporting the spindle 25 of a turn-table 26, this table being disposed to rotate in a vertical plane.

The outer face of the turn-table is in the same vertical plane with the rotating axis of the magazine and is further in a corresponding relation to an upper disk runway 27 and a lower disk runway 28, as particularly shown in Figs. 11 and 12 of the drawings. The upper runway is channel-shaped having spaced vertical sides forming a groove along which the disks may pass and by which they are guided. The forward ends of these side plates are cut away to provide clearance for the larger records of the magazine as they swing in relation thereto. The lower runway is also channel-shaped and terminates near the edge of the ledge 21, it being cut away to clear the circumference of the smaller disks and disposed in proper relation to receive either size of disk as they roll over the ledge 21 and toward the turntable.

The disks are ejected from the magazine and directed along the runways by means of an ejector finger 29, which is arcuate in shape and is fixed to the end of an arm extending from a pivot pin 30. This pin is mounted in suitable brackets in front of the magazine and thus permits the ejector finger 29 to swing vertically and in swinging to engage the rear side of the disk involved to lift the disk over the ledge 21, at the same time imparting rotating motion to the same.

This lifting action is produced by a weight 31 suspended upon a forwardly extending lever arm 32 which is formed integral with the arm of the ejector finger 29 and upon the opposite side of its pivotal center, thereby normally tending to swing the finger upwardly. The action of the weight 31 is resisted by a lifting finger 33 pivoted at 34 and which is formed integral with a downwardly extending shifting lever 33'. This lever projects through an opening in the floor 12 and is engaged by shifting mechanism which will be hereinafter described, said mechanism acting to swing the lever and to move the finger 33 upwardly beneath the arm 32. An additional lock finger 35 is disposed alongside of the ejector finger 29 and is mounted by means of an extension arm 36 to swing around the pivot pin 30. This member has a forward extension which carries a reciprocating lock pin 37 by which the lever arm 32 and the entire lever structure 36 may be locked together when desired. The lock finger 35 is of shorter length than the ejector finger 29 and, as shown in Fig. 2, is striking against a lock bar 38.

The shape of the bar 38 is particularly shown in Fig. 1, where it will be seen to possess a straight shank at the end of which is an arcuate extension adapted to swing across the path of travel of the finger 35 and to obstruct its movement, when desired. The member 38 is pivoted to a vertical pin 38' which extends upwardly along the forward side of the cabinet 10 and is housed within suitable bearings 40 at its upper and lower ends. This pin carries a shifting fork 41 adapted to engage the shank 42 of a lock pin 43, and to rest between a shoulder upon this pin and a small stop pin extending through the shank 42. In this manner it will be seen that forward or rearward movement of the lock pin 43 will act to rotate the pin 38' and swing the lock bar 38 into or out of its obstructing position.

The shank 42 of the pin 43 is adapted to register with perforations 44 formed in the outer shell 45 of the magazine, by which action the magazine is locked during the playing operation. Movement of the lock pin 43 is here shown as effected by the co-operative action of a push button 46 and a suitable coin. As shown in Fig. 3 the push button and lock pin are reciprocally mounted within a control case 47 and have complementary slotted portions along their adjacent sides into which a coin may be placed through the slot 48. When this coin is in position the push button and lock pin will be temporarily connected and pressure upon the button will force the pin inwardly and cause its shank to pass through the perforation in the shell, at the same time rotating the pin 38', thus acting to release the finger 35 and to permit the ejector finger 29 to swing upwardly. It is assumed that the pin 37 is locking the two fingers 29 and 35 to move together when this action takes place. In the event that the pin 37 does not lock these two members the lock bar 38 will have no effect upon the ejector 29 and will cause it to return the record to the turn-table from the magazine after having been played, thus making the device adapted for the continuous playing of dance music. It will be understood that any suitable slot or receptacle may be made a part of the casing 47 to receive the coins.

Fixed to the under side of the floor 12 is a hanger 49 which carries a pivot pin 50 at its lower end. Mounted upon this pivot pin is a record returning arm 51 which extends upwardly through a slot in the floor 12 and is formed with an outer arcuate end adapted to conform to the contour of the record upon the turn table 26. The pivot pin 50 is disposed in such position that the arm 51 may have a sweep across the turntable when swinging and will thus engage the record thereon and roll it up the runways which are both inclined downwardly from the magazine and cause it to pass over the ledge 21 to assume its original seated position within the magazine. This swinging action is produced by an eccentric cam 52, which is mounted upon a horizontally extending timing shaft 53 driven in a manner which will be hereinafter set forth. The cam 52 is adapted to engage a roller pin 54 which constantly bears upon its outer surface and is disposed above the eccentric. This pin is mounted at the upper end of a pitman rod 55, the lower end being pivoted to a rocker arm 56. The arm 56 is integrally united with the record returning arm 51 and will thus cause this arm to swing as the cam 52 raises the pin 54. This mechanism will restore the record to its original position within the magazine.

The timing shaft 53 carries a splined gear 57 by which it may be rotated. This gear is brought into mesh with a gear 58 fixed upon the turn-table spindle 25 and adapted to rotate therewith. Motion is imparted to the turn-table and its spindle by means of a friction wheel 59 held therebeneath and adapted to float as supported upon a small friction roller 60. The axis of the roller 59 is carried by swinging arms 61 pivoted at their rear ends to a bracket 62′ dependent from the floor 12. The axle of the roller 60 is carried upon a vertically swinging link 62′ pivoted to the main floor of the cabinet. This last-named axle also carries a large friction disk 63 in engagement with a driving disk 64 fixed upon the main shaft of a motor 65. Through the medium of this motor and various disks the entire mechanism of the phonograph is actuated and this therefore constitutes the source of power and its transmission mechanism.

The switch circuit controlling the motor is indicated at 66 and is shown as having sliding blades 67 adapted to be reciprocated between fingers upon an arm 68. This arm swings substantially vertically and is pivoted to the lower end of a switch control arm 69. The switch control arm extends upwardly through an opening in the floor 12 and is there pivotally supported upon a pin 70 carried in a suitable bracket upon the floor. The upper end of the control 69 supports a stop carrier 71. Fixed by means of a pin 72 to the end of the arm 69 is a disk stop 73. This member consists of a shank through which the pin extends and at the outer ends of which are two arcuate disk engaging members 74 and 75. These members are offset horizontally and stand in concentric relation to the axis of the turntable spindle to coincide with the outer circumferences of the ten and twelve-inch records, thus causing them to be disposed on arcs of substantially five and six-inch radii respectively. The stop carrier 71 is pivoted for vertical swinging movement upon the floor 12 by means of a pin 76, as in Fig. 1, which extends through bosses upon the carrier. The arm 69 is pivoted at 70 so that it can swing toward and away from the turntable, the loose joint at 72 permitting this movement. This member allows the entire stop mechanism to swing transversely and to bring the parts 74 and 75 into register with the records of corresponding sizes. Normally the stop is set for 10-inch records and when the lower track 28 is lowered by the action of a 12-inch record the member 74 will move away from the turn-table, as will be presently described. This swinging action is effected by downward movement of an extension 77 formed as a part of the lower runway 28, it being understood that this runway is pivoted at its forward end upon the pivot pin 28′. The extension portion 77 which is forked and engages an inclined shank 78 upon the lower end of the carriage, as particularly shown in Fig. 4, and thereby produces the transverse swinging movement. The depression of the runway 28 and this extension is, of course, effected by the disk passing therealong and is permitted by the release of a mechanism actuated by the larger size records and which will be presently described. It will be noted that the striking of the record against its respective stop shoulder 74, 75 will swing the arm 69 and will cause the switch contacts to be united, thereby starting the motor.

A notch 69′ is formed in the rear face of the controlling arm 69 and normally supports levers 79 and 80. These levers stand transversely of the arm 69 and are pivoted upon a shaft 81, the lever 79 being fastened to its shaft, as particularly shown in Fig. 14, while the lever 80 is fixed upon a sleeve 82 carried upon the shaft. The shaft 81 fitted with a shifting arm 83 at its outer end. This arm is adapted to engage shoulders upon a centering pin 84, as particularly indicated in Fig. 13, and which reciprocates within a bearing 84′. The centering pin is formed at its forward end with a conical point adapted to enter the opening in the center of the record disk, it being understood that this pin reciprocates horizontally toward and away from the turn-table 26

along the line of the axis of its spindle 25. The lever 80 is fitted at its outer end with a connecting link 85 which engages a plunger 86. The plunger is mounted within a pneumatic cylinder 87 which cushions the action of the lever.

This lever 80 is provided to allow movement of the reproducer arm 88. This arm and its mounting are particularly shown in Figs. 15 and 16 of the drawings where it will be seen to possess a horizontal extension 89 passing to a horn 90. This extension is rotatably supported within a sleeve 91 which allows the tone arm to swing over the face of the turn-table. The extension and the main body of the arm are articulately connected by a pin 92 which allows the vertical arm to swing toward and away from the turn-table. A weight 93 is mounted upon the arm and off center from the pin 92 so that the arm may normally swing toward the face of the turn-table. The action of this weight is normally prevented by the locking of the lever 80 within the notch upon the member 69, and when this is released is partially resisted by the escape of air from the cylinder 87 as the piston 86 is forced downwardly. A side view of the weight 93 is more particularly shown in Fig. 15, where it will be seen to be arcuate and concentric with the horizontal axis of the extension 89. This arcuate portion extends rearwardly and may be engaged by a finger 77′ upon the extension 77 of the lower runway to swing the tone arm into a position for accommodating the larger size records used in the machine. This weight also counterbalances the tone arm and allows it to traverse the face of the record disk in a desirable manner, the weight being so distributed so as to give the needle a slight lead toward the center of the record.

In order to normally hold the tone arm in initial playing position for both size records a stop rack 94 is provided having two notches on its face. A V-shaped projection 68′ is mounted upon the tone arm and is adapted to register with either of these notches. The stop arm extends parallel to the face of the turn table and may be relieved from supporting the upper part of the tone arm by the downward swinging of the lever 80 as it rotates the sleeve 82 and effects rotation of a rock shaft 95 upon which the rack 94 is mounted, this shaft being provided with a fixed crank arm 96 connected with a crank arm 97 upon the sleeve by a link 98, the rack 94 also acting as a lifter for the tone arm when the playing of the record is complete.

From the description thus far it will be recognized that movement of the ejector finger 29 to deliver a record to the turn-table will start the operation of the machine, and by engagement of the record with the proper stop 74 or 75 will swing the control arm 69 and start the motor, at the same time releasing the lever arms 79 and 80 to allow the tone arm to swing toward the face of the record and the centering pin to engage the opening in the center of the record disk and hold it during the playing operation. It is to be noted that the runway 28 is so arranged as to allow the center of the record to fall below the center of the turn-table and to stop after having passed its center, the action of the centering pin thereafter shifting the record to its proper position and thus eliminating the necessity of exact register of the records with the axis of the turn-table.

Referring to Figs. 17 and 18, it will be seen that the record is there shown as provided with arcuate protrusions 99 which are arranged concentrically with the axis of the record and upon the playing face thereof. These members are preferably made of various materials and may be either formed as a part of the record or applied thereto by an adhesive substance.

In Fig. 18 it will be noted that the members are mounted upon guide strips 100 which are arcuate and which will permit them to be set in proper relation to the last of the tone grooves upon the record, after which the strips may be torn away. These protrusions are adapted to be engaged by a contact member 101 which is carried by an arm 102 fixed to the reproducer arm 88. The end of this member 101 is adapted to normally lie close to the face of the record disk without touching the same and to be moved rearwardly when encountering the protrusions. This action will bring switch fingers 103 and 104 into contact with each other and thus close a circuit through electro-magnets 105 and a source of electric supply 106 which are shown in Fig. 15 as being wired in series.

The magnet 105 is mounted above the floor 12 and is adapted to influence an armature 107 normally dependent therebeneath, as particularly shown in Fig. 5. When this magnet is actuated it will swing an arm 108 toward the axis of the turn table at the rear of which it is disposed and into the path of travel of a face cam 109 protruding from the rear of the turn-table. The pivot of the integrally formed members 107 and 108 is carried upon a bearing 110 which is fixed to a rock shaft 111 and which allows the member 108 to swing toward and away from the rear face of the turn-table, as well as across the face in the manner previously described. The end of the rock shaft 111 is fitted with a lever arm 112, which extends in a horizontal direction toward the turn-table. The outer end of this lever arm is provided with a weight 113 by which pressure is exerted upon the shaft 111 to

swing the arm 108 toward the rear face of the turn-table. In order to hold the member 108 in the path of travel of the protrusion 109 after the magnet 105 has been de-energized, a triangular-shaped lock plate 114 is provided. This plate is pivoted to a shaft 115 extending transversely of the shaft 111 and therebeneath, the plate being disposed with its center of gravity off center from its axis, thus exerting a downwardly swinging force. The plate is normally held upwardly as it strikes the side of a finger 116 extending outwardly from the side of the armature 107. As this armature is raised upwardly the plate will fall down and beneath the finger, thus holding the armature against downward movement.

Fixed to the opposite end of the shaft 115 is a second lock plate 117, particularly shown in Fig. 7. This plate is formed with a shoulder 118 normally supporting the weight lever 112 and is further provided with a pin 119 adapted to be engaged by a fixed arm 120 carried upon the shaft 115. The lock plate 117 is free to rotate upon the shaft 115, and when the magnet lifts the weight lever 112 will fall with its shoulder 118 beneath the lever and support the same. This action will lock the lever 108 in its rearmost position.

The upper end of the arm 108 is fitted with a connecting link 120 which extends away from the turn-table and engages a crank arm 121 mounted upon a shifting shaft 122. This shaft is rotatably held in bearings upon the top of the floor 12 and carries a shifting yoke 123 at its outer end. The fork of this yoke is adapted to engage an annular groove in the hub of the sliding gear 57. As particularly shown in Fig. 1, this gear is splined upon the shaft 53 and will thus be shifted by the yoke into mesh with the driving pinion 58 carried upon the spindle 25 of the turn-table. The shaft 53 carries the disk return cam 52, the centering pin and tone arm restoring cam 124 and the magazine operated cam 125. The cam 124 is provided with a connecting rod 126 which extends downwardly and unites at its lower end with a crank arm 127. This arm is carried upon a shaft 128 extending horizontally and fitted with a second crank arm 129 which extends across the machine and beneath the levers 79 and 80. This lever is fitted at its extreme end with a link 130 which connects with the lever 79 and intermediate its outer end and its axis with a link 131 connecting it with the lever 80. A weight 132 is dependent from the outer end of the lever and exerts a force to swing the levers 79 and 80 downwardly.

The cam 52, as previously stated, acts through the connecting link 55 to swing the record returning arm forwardly. This arm is adapted to engage pins extending outwardly from a shifting bar 133 which is dependent from the floor 12 and may swing in either direction horizontally. Pins in the forward end of this bar are engaged by the shank 33′ of the lifting member 33, which, by encountering the lug 33^2 upon the weight arm 32, will lift this arm in a manner hereinafter described. The bar 133 also carries a pin 134 which is always in the rear of the weight extension on the reproducer and will swing this arm rearwardly to its original non-playing position when the bar 133 is swung forwardly, as will be the case during the movement of the record return arm to carry a record to the magazine.

Pivoted upon the pin 135, as clearly shown in Fig. 5, is a vertically swinging lever 136 which extends toward the timing shaft 53 and is adapted to be encountered by a lug 137 carried upon the gear 57. Below the pivotal point of this lug a switch arm 138 is formed as a continuation of the lever 136 and is pivotally connected by a link 139 to the switch member 140, as shown in Fig. 19, the opposite end of this member 140 being connected with the member 69 by the link 68, thus providing mechanism which, when this arm 136 encounters the lug 137, will swing to break the electrical contact in the switch 66 and cause the stop mechanism supported upon the arm 69 to be restored to its original position irrespective of whether the record played was a small or large one. The cam 125 is particularly shown in Fig. 6, where it will be seen to be engaged by a roller 141 which is carried on the upwardly extending end of an operating link 142. This link extends along the floor 12 and engages a ratchet lever 144 carrying a ratchet pawl 145 at its outer end. This pawl is adapted to engage perforations 146 in the side of the magazine shell 45 and to move the magazine the distance of one record. The pawl is spring-pressed and its action is supplemented by a lock pawl 147 which engage the same holes 146 in the shell 45, these two pawls operating together to advance and lock the mechanism in any desired position, the formation of the members being clearly shown in Figs. 23 and 24. While there has already been shown a method of operating the machine by means of coin operative push-buttons, this, however, plays a certain selected record. If it is desired to play one record after the other without manual operation it becomes necessary to silence the push button 46 and to throw the pawl 145 and the pawl 147 into operation. It will be understood that if the push button is holding the rack, the pawl could not move, and in order that both of these devices may not be accidentally placed in operation, there is provided the locking plate, as indicated at 149 in Figure 22. This plate is pivoted and is so disposed that when the top portion

covers the push button 42, it will allow the ratchet pawl and lock to come into action and if it is moved in the opposite direction, to be interposed between the pawls and the rack will permit the push button 42 to be operated while locking the pawl 145 and the lock pawl 147. To use the pawl 145 for continuous playing, it is necessary to disconnect the starting arm 29 from the member 35 by removing the pin 37.

A mechanism is provided for adapting the entire structure to automatically accommodate large or small records. As the machine normally stands, small records may be carried to the turn-table and removed therefrom without modification in the operating device. Large records, however, are provided to encounter a retarding finger 150 which is pivoted upon a pin 151 carried upon the upper runway 27. This finger is arcuate and extends downwardly through an opening in the runway to be engaged by the large records and swung out of their path of travel. A crank arm 152 is adapted to move with the finger and to force downwardly upon a rod 153. This rod extends through the floor 12 and engages a counterweighted lever 154 beneath the floor. As shown in Fig. 2, this lever is pivoted to swing in a vertical plane and has an upper extension normally disposed beneath a lug 155 upon the extension 77 of the lower runway 28. When the lever 154 is moved downwardly it will be relieved from the support of the lug 155 and will cause the runway to fall a distance predetermined to correspond to half the increase in diameter of the record over the normal small size records. This action will automatically cause the finger 77′ to encounter the rear end of the weight 93 on the reproducer arm and swing it rearwardly a corresponding distance.

In operation, a coin or slug is placed in the slot 48 of the control case, after which the push button 46 is depressed. The coin will have locked the member 47 with the pin 43 and will simultaneously force it inwardly toward the shell 45 of the magazine. The shank 42 will register with the perforation 44 in the magazine and thus lock the magazine against rotation, at the same time causing the yoke 40 to swing the vertical shaft 38′ and thereby swing the obstructing member 38 out of the path of travel of the finger 35, it being assumed that the fingers 35 and 29 are locked together by the pin 37. The release of the fingers 35 and 29 will cause them to swing upwardly, due to the weight exerted upon the member 31 and the finger 29 will therefore engage the under side of the record with which it is in register and lift it over the ledge 21, thereafter permitting it to roll down the runway 28 as guided by the upper runway 27. When the returning arm is placing the 12-inch record back into the rack, a roller 51′ on return arm 51 strikes against the lower face of the track 28 and thus returns the track to its normal position. While doing this the forked extension 77 of the lower track moves upwardly along the curved portion of the stop support 71 as indicated in Figure 4 and causes the stop 74 to swing horizontally and return to its original position close to the face of the turn-table and in condition to accommodate the smaller sized records. As the disk reaches the opposite end of this runway, it will encounter the proper stop 74 or 75; it being assumed in the present instance that the disk is of the smaller size, it will therefore strike the stop 74. The impact of the record with the stop will cause the stop and the arm 69, upon which it is mounted, to swing toward the back of the case, at the same time oscillating the switch member 140 connected with its lower end by the link 68. This will cause the blades 67 to become engaged and establish the motor circuit.

Simultaneous with this movement the lever 69 will swing from beneath the members 79 and 80 and will thereby set the centering pin and reproducer arm support in motion in the manner previously described. The reproducer arm will be lowered against the record as resisted by the air cushion in the cylinder 87, while the centering pin will be moved horizontally within its housing 84′ to bring the record to a centered position upon the turn-table. While this is being accomplished the motor is overcoming the inertia of the driving mechanism and the turntable, and is driving it at its normal rate of speed. The needle will thereafter impinge against the face of the record and will be carried therealong as guided by the sound grooves thereupon and the unbalanced weight 93.

As the tone arm nears the end of its playing stroke the switch member 101 will encounter the protrusions 99 upon the face of the disk and bring the contact members 103 and 104 into register, thus completing the circuit through the magnet 105 and source of electrical supply 106. The magnet 105 will operate as previously described to throw the arm 108 into the path of travel of the cam lug 109, after which the gears 57 and 58 will be brought to mesh to operate the time shaft and the mechanism carried thereby. The operation of the various cams will act as previously described to restore the centering pin and tone arm to their original positions and to feed the magazine after the record has been returned.

Experience has proven that it is desirable to entirely isolate the motor 65 from the phonograph mechanism in order to eliminate all mechanical vibrations and thus insure a smooth and even tone to the phono-

graph. In the present instance, the motor is shown as resting upon a V-shaped rib 65' which registers with a groove in the bottom of the motor case, said groove being off center and allowing the motor to swing toward the various friction rollers of its transmission mechanism.

It will thus be seen that the mechanism here disclosed will operate to successively play phonograph records, removing them from and replacing them within a magazine that it may be actuated to repeat the same record, or by selectively disposing the records in proper register with the runways, may be caused to play any record desired, the entire mechanism being automatic in its action.

While I have shown the preferred form of my invention as now known to me, I wish it understood that various changes in the construction, combination and arrangement of parts may be made by those skilled in the art without departing from the spirit of the invention as claimed.

Having thus described my invention, what I claim and desire to secure by Letters Patent is:—

1. An automatic phonograph comprising a driving mechanism, power means therefor, a turn-table operated thereby, a disk magazine, ejector means for delivering records from the magazine to the turn-table, and means set in motion by the presence of the record upon the turn-table whereby the power means will be actuated.

2. An automatic phonograph comprising a driving mechanism, power means therefor, a turn-table operated thereby, a disk magazine, ejector means for delivering records from the magazine to the turn-table, means set in motion by the presence of the record upon the turn-table whereby the power means will be actuated, and means automatically operating to restore the disk to its original position within the magazine when the playing operation has been completed.

3. An automatic phonograph comprising driving means, a turn-table operated thereby, power means therefor, a reproducer arm disposed in playing relation to the turn-table, a multiple disk magazine from which disks may be delivered to the turn-table, ejector means for selectively delivering disks from the magazine to the turn-table, means whereby the presence of the record upon the turn-table will start the power means and means in combination with said last-named means for centering the record upon the turn-table and permitting the needle of the reproducer arm to move against said record.

4. An automatic phonograph comprising driving means, a turn-table operated thereby, power means therefor, a reproducer arm disposed in playing relation to the turn-table, a multiple disk magazine from which disks may be delivered to the turn-table, ejector means for selectively delivering disks from the magazine to the turn-table, means whereby the presence of the record upon the turn-table will start the power means, means in combination with said last-named means for centering the record upon the turn-table and permitting the needle of the reproducer arm to move against said record, and means acting at the completion of the playing operation to automatically release the disk from the centering pin and thereafter restore said disk to its proper position within the magazine.

5. An automatic phonograph comprising a horizontally swinging magazine adapted to support a plurality of phonographic disks in vertical positions and radial to the axis of the magazine, a vertically disposed turn-table in radial alignment with the disks in the magazine, runways guiding the disks to and from the magazine to the turn-table, an ejector gravity operated to move one of the disks from the magazine to the turn-table, manually-operated means for releasing the ejector, power means for driving the turn-table and stop members disposed in the path of travel of the disk whereby its presence upon the turn-table will start the power means to permit rotation of said turn-table.

6. An automatic phonograph comprising a horizontally swinging magazine adapted to support a plurality of phonographic disks in vertical positions and radial to the axis of the magazine, a vertically disposed turn-table in radial alignment with the disks in the magazine, runways guiding the disks to and from the magazine to the turn-table, an ejector gravity operated to move one of the disks from the magazine to the turn-table, power means for driving the turn-table, a horizontally reciprocating centering pin adapted to register with a central opening in the disk and to hold it in proper relation to the turn-table, a reproducer arm, means for normally supporting said arm with its needle out of contact with the disk and means whereby the presence of the disk upon the turn-table will cause the power means to begin operation, the centering pin to move to registered position with the disk and the reproducer arm to be relieved from its support to allow its needle to bear upon the face of the disk.

7. An automatic phonograph comprising a horizontally swinging magazine adapted to support a plurality of phonographic disks in vertical positions and radial to the axis of the magazine, a vertically disposed turn-table in radial alignment with the disks in the magazine, runways guiding the disks to and from the magazine to the turn-table, an ejector gravity operated to move one of the disks from the magazine to the turn-

table, power means for driving the turn-table, a horizontally reciprocating centering pin adapted to register with a central opening in the disk and to hold it in proper relation to the turn-table, a reproducer arm, means for normally supporting said arm with its needle out of contact with the disk, means whereby the presence of the disk upon the turn-table will cause the power means to begin operation, the centering pin to move to registered position with the disk and the reproducer arm to be relieved from its support to allow its needle to bear upon the face of the disk, protrusions formed upon the disk, electric switch means adapted to be closed by registry with said protrusions and electrically operated means controlled by the closing of said switch whereby the operation of the power means will be discontinued, the reproducer arm relieved from the record, the centering pin moved from registry with the opening in the record, and the record thereafter returned to its original position within the magazine.

8. An automatic phonograph comprising a horizontally swinging magazine adapted to support a plurality of phonographic disks in vertical positions and radial to the axis of the magazine, a vertically disposed turn-table in radial alignment with the disks in the magazine, runways guiding the disks to and from the magazine to the turn-table, an ejector gravity operated to move one of the disks from the magazine to the turn-table, power means for driving the turn-table, a horizontally reciprocating centering pin adapted to register with a central opening in the disk and to hold it in proper relation to the turn-table, a reproducer arm, means for normally supporting said arm with its needle out of contact with the disk, means whereby the presence of the disk upon the turn-table will cause the power means to begin operation, the centering pin to move to registered position with the disk and the reproducer arm to be relieved from its support to allow its needle to bear upon the face of the disk, protrusions formed upon the disk, electric switch means adapted to be closed by registry with said protrusions, electrically operated means controlled by the closing of said switch whereby the operation of the power means will be discontinued, the reproducer arm relieved from the record, the centering pin moved from registry with the opening in the record and the record thereafter returned to its original position within the magazine, and means operated by the closing of said switch whereby the magazine will be moved to bring an unplayed record into register with the turn-table after the played record has been returned to said magazine.

9. An automatic phonograph comprising a magazine adapted to receive a plurality of phonographic disks, a vertical turn-table in radial alignment with the various compartments of the magazine, an ejector member gravity operated to act to selectively remove one of the disks from the magazine and deliver it to the turn-table, lock means for normally withholding said ejector, and manually-operated means for simultaneously locking the magazine against movement and releasing the ejector finger to permit a certain disk to be delivered to the turn-table.

10. An automatic phonograph comprising a magazine adapted to receive a plurality of phonographic disks, said disks being formed with protrusions upon their playing surface and adjacent their centers for co-operating with means to discontinue operation of the phonograph after the playing has been completed, a vertical turn-table in radial alignment with the various compartments of the magazine, an ejector member gravity operated to act to selectively remove one of the disks from the magazine and deliver it to the turn-table, lock means for normally withholding said ejector, manually-operated means for simultaneously locking the magazine against movement and releasing the ejector finger to permit a certain disk to be delivered to the turn-table, a centering pin in axial alignment with the turn-table, a reproducer arm adapted to swing across the face of the disk, means for normally withholding said arm with its needle out of contact with the face of the disk and turn-table, an electric motor for driving the mechanism, a switch controlling the motor, and means whereby the presence of a phonographic disk upon the turn-table will cause the switch to be closed to set the motor in operation, the centering pin to be moved to register with the center of the disk and the reproducer arm relieved to permit its needle to bear upon the surface of the disk.

11. An automatic phonograph comprising a magazine adapted to receive a plurality of phonographic disks, said disks being formed with protrusions upon their playing surface and adjacent their centers for co-operating with means to discontinue operation of the phonograph after the playing has been completed, a vertical turn-table in radial alignment with the various compartments of the magazine, an ejector member gravity operated to act to selectively remove one of the disks from the magazine and deliver it to the turn-table, lock means for normally withholding said ejector, manually-operated means for simultaneously locking the magazine against movement and releasing the ejector finger to permit a certain disk to be delivered to the turn-table, a centering pin in axial alignment with the turn-table, a reproducer arm adapted to swing across the face of the disk, means for normally withholding said arm with its needle out of contact with the face of the disk and turn-table,

an electric motor for driving the mechanism, a switch controlling the motor, and means whereby the presence of a phonographic disk upon the turn-table will cause the switch to be closed to set the motor in operation, the centering pin to be moved to register with the center of the disk and the reproducer arm relieved to permit the needle to bear upon the surface of the disk, and means co-operating with the protrusions upon the record being played whereby their registry therewith will discontinue operation of the motor and restore the disk and the various operating elements to their original non-playing positions.

12. In an automatic phonograph having a vertically disposed turn-table against which disks may be supported, a horizontally reciprocated centering pin adapted to register with the central opening in the disk, a reproducer arm carrying a needle adapted to bear against the face of the disk, means for normally holding said centering pin and tone arm out of register with the disk, and means whereby the presence of the disk upon the turn-table will permit actuation of the centering pin and tone arm to move to the registering positions in relation to said disk.

13. In an automatic phonograph having a vertically disposed turn-table against which disks may be supported, a horizontally reciprocated centering pin adapted to register with the central opening in the disk, a reproducer arm carrying a needle adapted to bear against the face of the disk, means for normally holding said centering pin and tone arm out of register with the disk, means whereby the presence of the disk upon the turn-table will permit actuation of the centering pin and tone arm to move to the registering positions in relation to said disk, and a dash pot adapted to cushion the movement of the tone arm toward the disk, a switch, an electric motor included within the circuit of said switch, and means operating simultaneously with the movement of the tone arm and disk to close the circuit of said switch and permit the motor to drive the turn-table.

14. An automatic phonograph comprising a vertically disposed turn-table, a horizontally swinging magazine adapted to support a plurality of phonographic records of various diameters in vertical position, a tone arm normally supported to play the smaller size records, means for delivering the records to the turn table and means automatically operated during the delivery operation to adapt the reproducer arm to larger size records.

15. An automatic phonograph comprising a vertically disposed turn-table, a horizontally swinging magazine adapted to support a plurality of phonographic records of various diameters in vertical position, a tone arm normally supported to play the smaller size records, means for delivering the records to the turn-table, means automatically operated during the delivery operation to adapt the reproducer arm to larger size records, and means for automatically restoring the reproducer arm to its original position after said large-sized record has been removed therefrom.

16. In an automatic phonograph, a record rack, a vertical turn-table with its operating parts, a coin operated device to start a selected record towards the turn-table, together with suitable means to cause the machine to play automatically one record after another, and a lock plate to prevent the coin operating device, and the means to play one record after the other, from being both in operation at the same time.

17. An automatic phonograph comprising a circular form of record rack pivoted at the center, a vertical turn-table, its operating devices and motor, runways between the rack and turn-table composed of inclined top and bottom grooved tracks, the lower member being pivoted at one end, the other end being free to drop a suitable distance to accommodate the larger record when said larger record releases a locking means, said locking means being released by the larger record impinging on a finger in the upper track, and means to return these parts to their original position.

18. An automatic phonograph having a suitable record rack, a vertical turn-table with its operating parts and motor, suitable top and bottom runways, the latter having a suitable grooved projection in which the curved end of a record stop can operate to remove the projection that stops the smaller record and places the projection in position for the larger record when said larger record drops the lower track, together with means to return these parts to their normal position.

19. An automatic phonograph with suitable record rack, runways, a vertical turn-table, with its operating parts, together with an arm passing close to and across the face of the turn-table to place the record that has been played back into the rack, said arm having a suitable roller or projection to raise one end of the lower runway into normal position after a large record has been played.

20. An automatic phonograph having an arcuately swinging record rack, runways, a vertical turn-table with its operating parts, the gears and cams to operate the various parts, together with the means whereby the record rack is moved to bring one record after the other in alignment with the runways, locking means to hold the record rack stationary while the record is being played and automatic means whereby the next following record is started down the runways.

21. An automatic phonograph having a vertical turn-table, a reproducer, a vertical

reproducer arm, and a counter weight therefor so disposed as to continuously give the reproducer needle a slight constant impetus toward the rotating axis of the record.

22. An automatic phonograph having a vertical turn-table, a vertical reproducer arm carrying a reproducer adapted to move over the face of the turn-table, means normally holding the reproducer in an inoperative position, means operative by a record disk placed upon the turn-table to release the reproducer and permit it to move by gravity onto the face of the disk and a dash pot adapted to cause the needle of the reproducer to be brought gently against the face of the disk.

23. An automatic phonograph having a record rack, runways, a turn-table, with its operating parts, a reproducer and reproducer arm, the latter supporting electrical contact points, a current supply, a magnet operated when the circuit is closed, said magnet drawing an arm into the path of a cam on the turn-table to start means for returning the played record to the rack, said contact points being forced together by protuberances placed on the face of the record a predisposed distance from the end of the thread on the record to thereby close the circuit.

24. In a multiple disk phonograph, a turntable, a tone arm adapted to operate in conjunction therewith, and a swinging rack adapted to hold a plurality of disk records in a vertical position and in radial relation to the pivotal center of said rack and from which the records may be delivered to the turn-table.

25. In an automatic phonograph, a vertical turn-table, a disk rack adapted to move in arcuate relation to the turn-table, an upper fixed track between the turn-table and the disk rack, a lower track between the turn-table and the disk rack, means whereby a disk may be moved onto the lower disk track from the rack and means for returning the disk along said track to its original position on the rack.

26. In an automatic phonograph a turntable, a disk rack mounted to move in relation to said table, upper and lower disk tracks interposed between said rack and turn-table whereby the separate disks of said rack may be delivered to the flat face of the turn-table, a tone arm swinging toward and away from said turn-table, power means for driving the turn-table, and control means whereby the power means will be in continuous operation to rotate the turn-table, to move the tone arm thereagainst and to return a disk record to the rack after it has been initially started therefrom by said starting means.

27. In an automatic phonograph, a movable disk rack, a turn-table to which the disks will be delivered, a tone arm adapted to move back and forth in relation to the face of said table and to swing over the face thereof, and means whereby the movement of the disk from said disk rack to said turntable will automatically adjust the arm to agree with the diameter of the traveling disk.

28. A phonograph, a record disk, a tone arm and reproducer adapted to be moved toward and away from the face of said disk, means for normally supporting said arm and reproducer with its needle out of contact with the disk, means for releasing said supporting means against which the tone arm rests and pneumatic means for cushioning the releasing movement of said supporting means whereby the needle of the reproducer supported by the tone arm will gently move into engagement with the face of the record.

29. In a phonograph, a phonographic record, a tone arm carrying a reproducer, the needle of which is adapted to make contact with the face of the record, means against which the reproducer arm rests and by which it normally supports the needle out of contact with the face of the record, means for releasing said support, and pneumatic means for retarding the movement of the support as it lowers the needle onto the face of the record, thereby cushioning the movement of the needle as it comes into contact with the record.

30. A phonograph having a vertical turntable, a vertically disposed tone arm carrying a reproducer adapted to swing toward and away from the face of the turn table and across the face thereof, a counter weight member acting to swing the tone arm with its reproducer toward the face of the turntable and to produce a constant impetus of the reproducer toward the rotating axis of the turntable and across the face thereof.

31. A phonograph having a vertical turntable, a vertically disposed tone arm carrying a reproducer and needle adapted to swing toward and away from the face of the turn table and across the face thereof, a counter weight member acting to swing the tone arm with its reproducer toward the face of the turntable and to produce a constant impetus of the reproducer toward the rotating axis of the turntable and across the face thereof, means for normally supporting the needle of the reproducer out of contact with a record disk on the turntable, means for holding the reproducer in fixed relation to the record disk, and pneumatic means whereby the release of the supporting means will permit the needle of the reproducer to be gently lowered onto the face of the record.

32. In a phonograph having a vertical turntable, a vertically disposed tone arm carrying a reproducer at the end thereof, a horizontally extending pivot from which the said tone arm may swing across the face of the record, a second pivot by which the tone arm and reproducer with needle may swing toward and away from the record and a counter weight member adapted to normally swing the tone arm inwardly toward the record and to simultaneously give the tone arm a continuous swinging impetus across the face of the record and toward the rotating axis thereof.

HADWEN SWAIN.

Witnesses:
CLARKSON SWAIN,
O. A. EGGERS.