Sept. 6, 1955 K. W. WICKARDT 2,716,877

METHOD OF KNITTING FABRIC

Original Filed Sept. 20, 1951 4 Sheets-Sheet 1

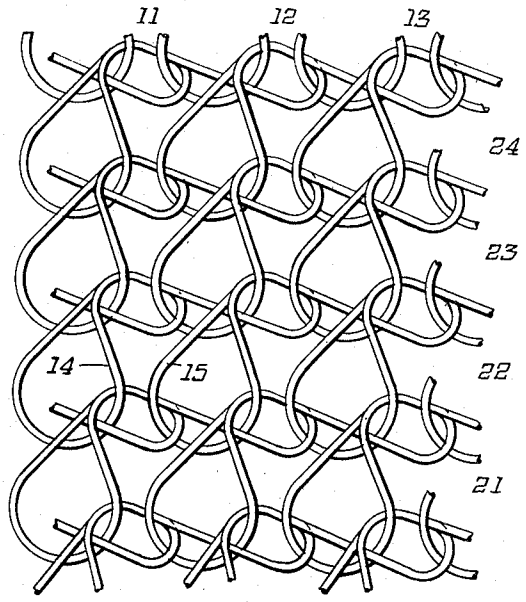

Fig. 1.

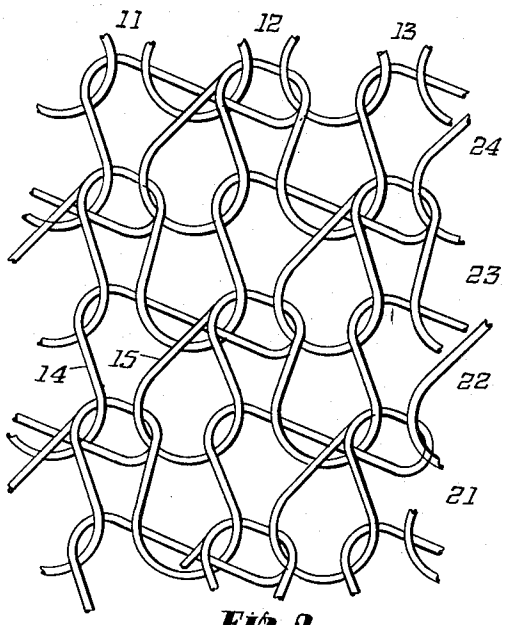

Fig. 2.

Inventor:
K. W. WICKARDT
By
Morrison, Kennedy & Campbell,
Attorneys

Sept. 6, 1955 K. W. WICKARDT 2,716,877

METHOD OF KNITTING FABRIC

Original Filed Sept. 20, 1951 4 Sheets-Sheet 2

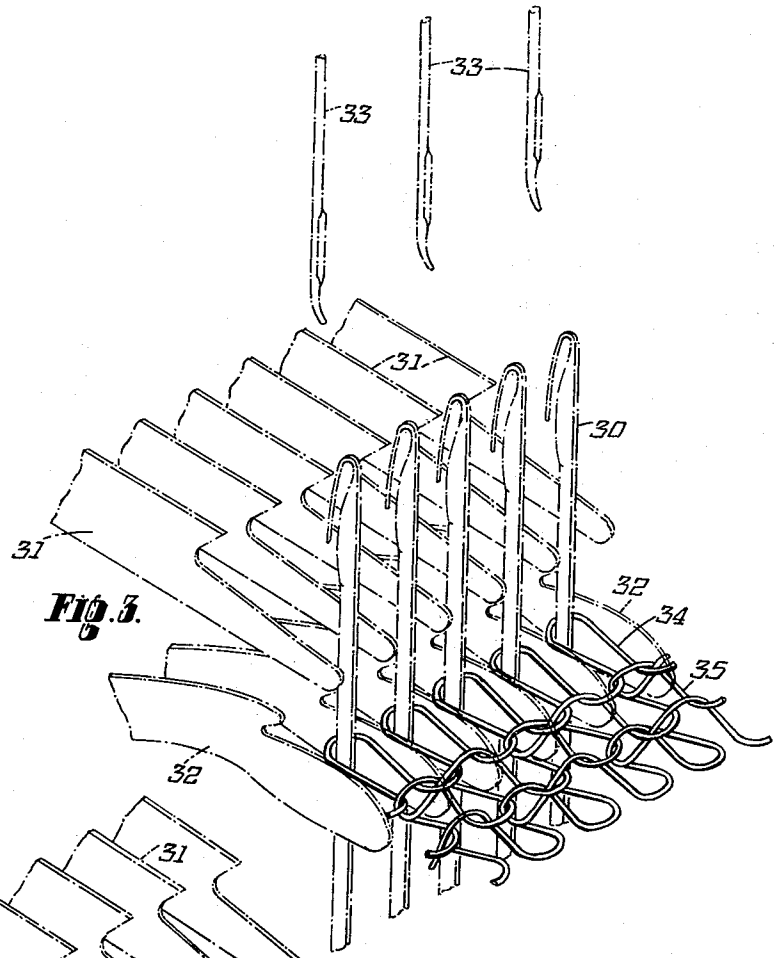

Fig. 3.

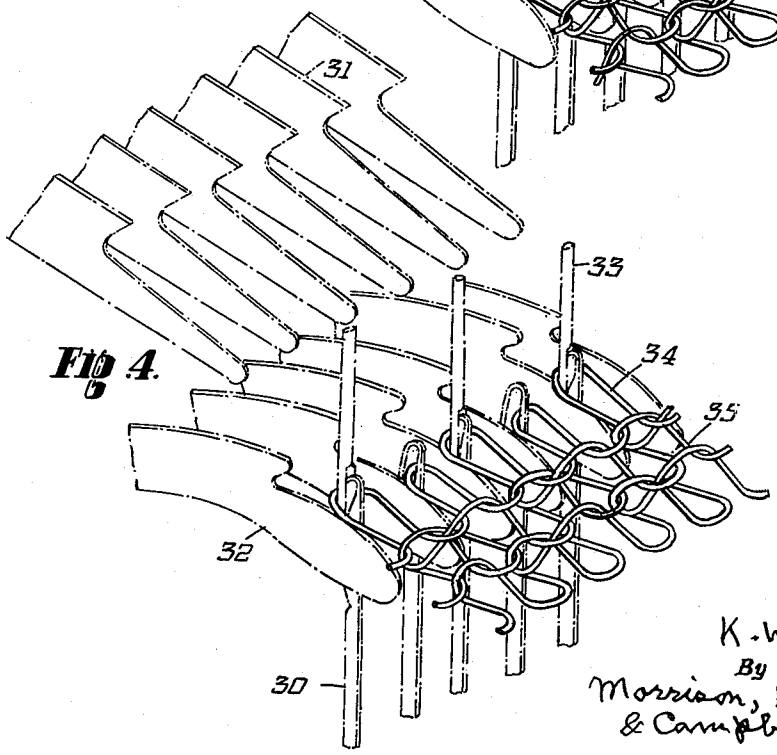

Fig. 4.

Inventor:
K. W. WICKARDT
By
Morrison, Kennedy & Campbell,
Attorneys

Sept. 6, 1955 K. W. WICKARDT 2,716,877

METHOD OF KNITTING FABRIC

Original Filed Sept. 20, 1951 4 Sheets-Sheet 3

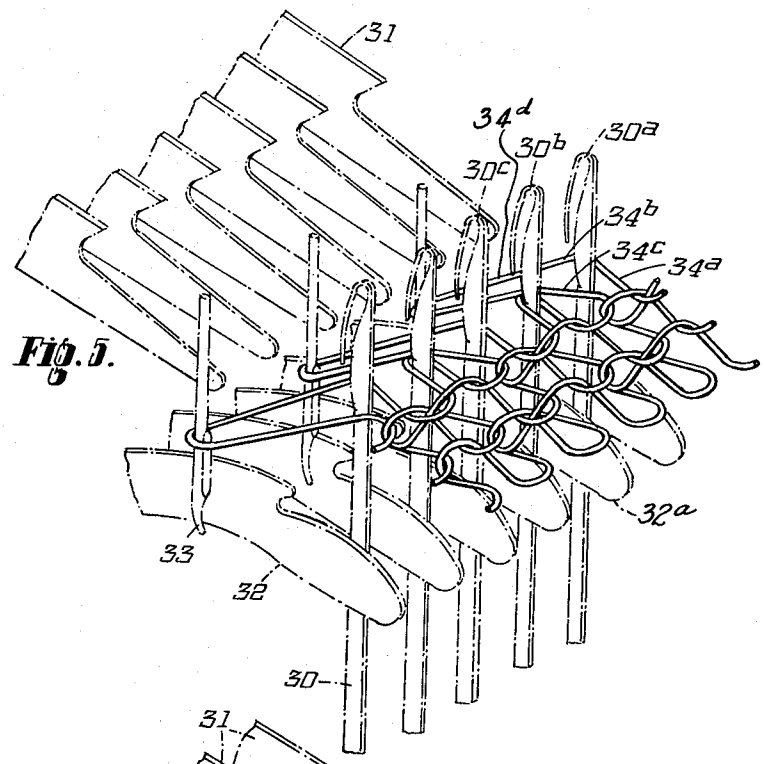

Fig. 5.

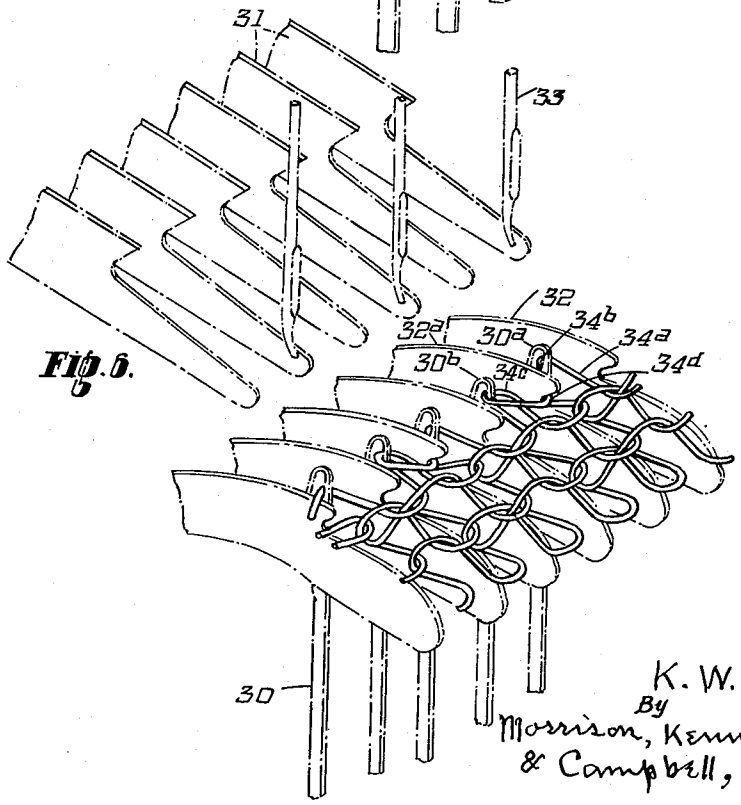

Fig. 6.

Inventor:
K. W. WICKARDT
By
Morrison, Kennedy
& Campbell, Attorneys.

Sept. 6, 1955 K. W. WICKARDT 2,716,877

METHOD OF KNITTING FABRIC

Original Filed Sept. 20, 1951 4 Sheets-Sheet 4

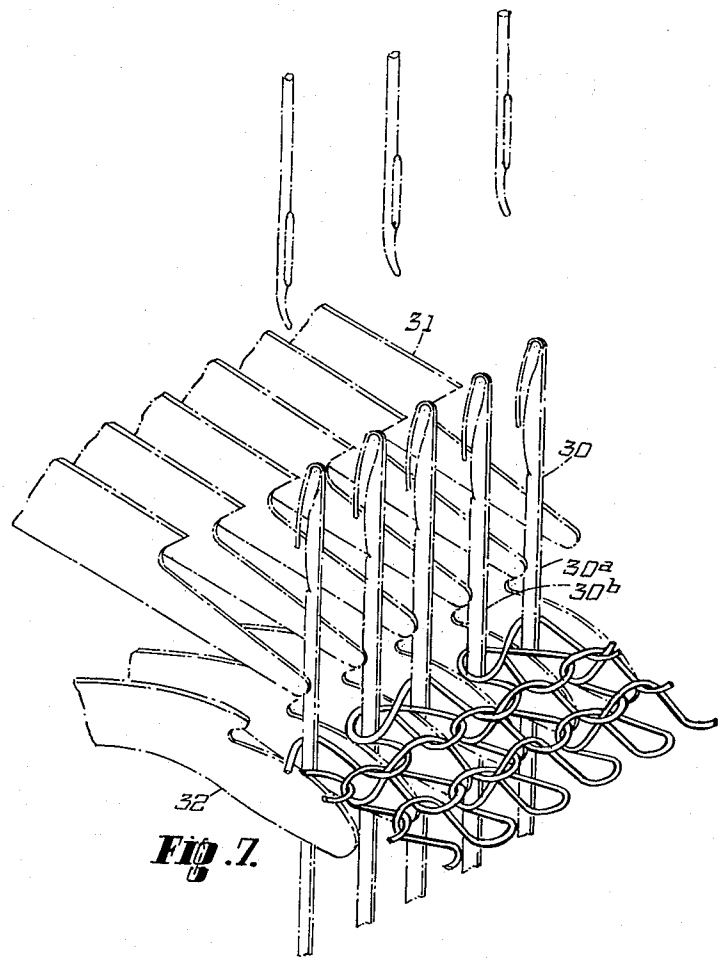

Fig. 7.

Inventor:
K. W. WICKARDT
By
Morrison, Kennedy
& Campbell, Attorneys.

United States Patent Office 2,716,877 Patented Sept. 6, 1955

2,716,877

METHOD OF KNITTING FABRIC

Kurt Willi Wickardt, Liverpool, England, assignor to Hosemaster Machine Company Limited, Liverpool, England, a British company

Original application September 20, 1951, Serial No. 247,396. Divided and this application December 24, 1952, Serial No. 327,774

Claims priority, application Great Britain September 23, 1950

16 Claims. (Cl. 66—96)

The present invention relates to knitted fabrics and is especially applicable to knitted fabrics such for example as ladies' stocking fabric as manufactured by knitting machines of the Cotton type. This application is divided from my application Serial No. 247,396, filed September 20, 1951, and now abandoned.

The object of the invention is to provide a method of knitting a fabric such as will resist or prevent running of the loops which ordinarily results from the breaking of the thread in a plain knitted fabric, without materially reducing the elasticity of the fabric.

It has been previously proposed to knit a fabric with a run-resisting quality by interlocking loops of one course with adjoining loops of the same course or by the introduction of special or additional combining loops interlocked with the normal loops of the plain knitted fabric. Such run-resisting fabrics, however, have the disadvantage of a serious loss in elasticity and one feature of the present invention consists in that the use of additional yarns or threads for the formation of locking loops is avoided.

According to the present invention a method of knitting a run-resisting fabric on a straight bar knitting machine such as a Cotton type having bearded needles, hooked knock-over bits and transfer points, includes after the knock-over operation has been completed the steps of lowering the transfer points each to engage a loop around a predetermined needle corresponding thereto, displacing the needles and transfer points away from one another and drawing said loops rearwardly of the fabric, moving the transfer points transversely of the fabric through a distance at least equal to the spacing of the needles and extending said loops, lowering the needles and engaging portions of the extended loops in the beards of needles adjacent those from around which they were drawn, withdrawing the transfer points and leaving each extended loop engaging around the shank of the needle from which it was drawn and around the beard of the adjacent needle, relatively approaching the needles and knock-over bits and causing another portion of each extended loop to engage the hook of a knock-over bit and bringing that portion of each extended loop which was behind the beard of the adjacent needle to a position in front of the shank thereof, inverting the extended portion of the loop to form a closed turn around the shank of the adjacent needle.

The word "turn" is used herein to mean a short lengh of yarn which crosses itself to form a closed bight or turn as distinct from an open bight.

The invention will be further described by way of example and with reference to the accompanying drawings, in which:

Fig. 1 is a diagrammatic view showing the interlocking and interlinking of loops in a fabric made according to the method of the present invention and in which each loop of each course is interlocked and interlinked with two loops of the next course.

Fig. 2 is a diagrammatic view showing the interlocking and interlinking of loops in another fabric made according to the method of the present invention and in which alternate loops of each course are interlocked and interlinked with two loops of the next course.

Figs. 3 to 7 are diagrammatic perspective views showing in different stages of operation the loop forming elements of a knitting machine of the Cotton type adapted to knit a fabric according to the method of the present invention.

In Figs. 1 and 2 the needle loops are indicated by reference numerals **11**, **12** and **13** and the successive courses in the knitted fabric by the reference numerals **21**, **22**, **23** and **24** respectively. It will be seen from Figs. 1 and 2 that one part **14** of a loop is interlinked in the well known manner with the loop of the same wale in the next course and that another part **15** of the same loop has been extended and inverted to form a complete turn and is interlocked with the loop of the adjacent wale in the next course.

The interlocking operation can be performed with all the loops of each course, as shown in Fig. 1, or with alternate loops in each course as shown in Fig. 2. In the latter case, however, it is necessary to interlock different wales in the different courses. For example, in course **22** shown in Fig. 2, the loop of the wale containing needle loop **11** is interlocked, whilst in course **23**, the loop in the adjacent wale containing needle loop **12** is interlocked. Thus in alternate courses of the fabric the interlocking of the loops takes place in the same alternate wales whilst in the intermediate courses the interlocking of the loops takes place in the intermediate wales.

Whilst in Figs. 1 and 2 the interlocking has been shown to take place with the wale to the right of that containing the interlocked loop, it will be understood that a loop may be interlocked with a loop in the wale to the left. Furthermore, the present invention is not restricted to interlocking every loop, or alternate loops in each course, and other combinations and courses may be selected to produce a run-resisting fabric. It will be appreciated, however, that the less frequently loops are interlocked the less will be the run-resisting powers of the fabric.

One arrangement of loop forming elements of a knitting machine of the Cotton type adapted to knit a run-resisting fabric according to the method of the invention is shown diagrammatically in Figs. 3 to 7 in which reference numerals **30**, **31** and **32** denote the needles, jack and dividing sinkers, and knock-over bits respectively. The needles **30** are supported in a needle bar (not shown) which is operated by mechanism in the knitting machine to move the needles vertically and horizontally. The jack sinkers and dividing sinkers **31** are supported in a sinker head and moved horizontally in a known manner by mechanism in the knitting machine. Knock-over bits **32** are disposed below the sinkers and may be moved horizontally and vertically in a known manner by mechanism in the knitting machine. Transfer points **33**, which may be the same as or similar to the well known picot points or narrowing points are disposed above the needles **30** in such a manner, for example by attachment to a transfer bar, that they can be displaced horizontally and vertically.

For the sake of simplicity of description the arrangement of loop forming elements shown in Figures 3 and 7 is such as may be used for the production of fabric shown diagrammatically in Fig. 2 in which alternate loops in a course are interlocked. Thus the number of transfer points **33** is half the number of needles **30**. It will be understood that in order to produce fabric as shown diagrammatically in Fig. 1 in which every loop in a course is interlocked, a transfer point will be provided corresponding to each of the needles **30**.

Fig. 3 shows the disposition of the needles **30**, sinkers **31** and knock-over bits **32** after one course of loops **34** has been drawn, formed and interlocked with the previous knitted fabric **35**. Transfer points **33** are now moved downwardly and brought into contact with the corresponding needles **30** so as to close the beards of the needles with which they are in contact, and the needles and transfer points are then moved further downwardly relatively to the knock-over bits **32** so that the knock-over bits **32** push the loops from around those needles which are in contact with the transfer points on to the transfer points whilst the loops around the intermediate needles are retained in the beards of the intermediate needles. The disposition of the parts is then as shown diagrammatically in Fig. 4.

The needles **30** are moved upwardly while the loops **34** are held in their position by the noses of the sinkers **31** protruding between the needles until the lower ends of the beards of the needles **30** are slightly above the loops **34**. The sinkers are now moved backwardly until their noses clear the loops **34** whereupon the needles **30** and the transfer points **33** are moved upwardly simultaneously until the lower ends of the transfer points **33** clear the upper edges of the knock-over bits **32**. The friction between the loops **34** and needles **30** as well as the transfer points **33** is sufficient for the fabric to take part in the upward movement of needles and transfer points after the sinkers have been withdrawn and to hold the fabric in its position on the needles and transfer points. In this position the needles are moved forwardly away from the presser edge of the machine sufficiently for the needle beards to clear the transfer points and the transfer points **33** are moved transversely a distance to the left at least equal to the spacing between the needles **30**. The parts are then disposed relatively to one another as shown diagrammatically in Fig. 5 and it will be seen that part **34*b*** of loop **34*a*** is brought into contact with the rear side of needle **30*a*** and that part **34*c*** of loop **34*a*** contacts the rear side of needle **30*b*** but is clear of the beard of needle **30*c***. The loops previously around alternate needles are similarly disposed. It will be understood that whilst the transfer points are shown in Fig. 5 displaced to the left they may equally well be displaced to the right.

The needles **30** are now moved downwardly until part **34*b*** of loop **34*a*** is enclosed under the beard of needle **30*a*** and part **34*c*** under the beard of needle **30*b***. The transfer points **33** are then moved upwardly after the sinkers **31** have been brought into a forward position in which their noses protrude beyond the needles to cast off parts **34*c*** and **34*d*** from the lower end of the corresponding transfer point. Part **34*c*** of loop **34** is already engaged under the beard of needle **30*b*** and the needles **30** are moved horizontally and vertically in such a manner that their upper ends follow an approximately circular path with the throat of knock-over bits **32** as a centre. This movement swings parts **34*d*** of loop **34** over the top of needle **30*b*** thus transferring this part of the loop from behind the beard of needle **30*b*** to the front of its shank. The parts are then disposed relatively to one another as shown diagrammatically in Fig. 6.

The needles **30** are then moved upwardly and the sinkers **31** are moved forwardly in order to hold down the fabric and prevent it from moving upwardly with the needles **30** and to enclose it between the knock-over bits **32** and the sinkers **31**. The parts are then disposed relatively to one another as shown diagrammatically in Fig. 7 in which it will be seen that the loop formerly around needle **30*a*** has been extended transversely and inverted to form a closed turn around needle **30*b***. A thread laying operation may now follow in the normal manner and the same operation may be repeated in the following course after the knock-over operation, and similarly for other courses.

The mechanism (not shown) for imparting the necessary movement to the transfer points, needles, and sinkers may be of any suitable type, such as one including one or more cam shafts and a plurality of cams, cam followers and levers, which it is thought will be readily apparent to one skilled in the art.

I claim:

1. A method of knitting a run resisting fabric on a straight bar knitting machine having bearded needles, hooked knock-over bits and transfer points, including after the knock-over operation has been completed, the steps of lowering the transfer points each to engage a loop around a predetermined needle corresponding thereto, displacing the needles and transfer points away from one another and drawing said loops rearwardly of the fabric, moving the transfer points transversely of the fabric through a distance at least equal to the spacing of the needles and extending said loops, lowering the needles and engaging portions of the extended loops in the beards of needles adjacent those from around which they were drawn, withdrawing the transfer points and leaving each extended loop engaging around the shank of the needle from which it was drawn and around the beard of the adjacent needle, relatively approaching the needles and knock-over bits and causing another portion of each extended loop to engage the hook of a knock-over bit, and bringing that portion of each extended loop which was behind the beard of the adjacent needle to a position in front of the shank thereof, inverting the extended portion of each extended loop to form a closed turn around the shank of the adjacent needle.

2. The method according to claim 1 including the step of drawing and extending every loop.

3. The method according to claim 1 including the steps of extending alternate loops in one course and loops intermediate said alternate loops in the next course.

4. The method according to claim 1 including the step of extending predetermined loops at every course.

5. A method of knitting a run resisting fabric such as a ladies' stocking fabric on a straight row of bearded needles including the steps of engaging on transfer points predetermined loops of a knitted course, moving the needles and transfer points and extending said loops rearwardly of the fabric and transversely of the fabric and engaging the forward sides of said extended loops each in the beard of the needle adjacent that around which it was originally formed, disengaging said extended loops from the transfer points, engaging the rearward sides of said extended loops in the hooks of hooked knock-over bits and passing said rearward sides over said adjacent needles to form closed turns therearound, and then knitting another course on said needles and continuing said steps.

6. A method of knitting a run resisting fabric such as a ladies' stocking fabric on a straight row of bearded neeedles including the steps of engaging on transfer points predetermined loops of a course, extending said loops rearwardly of the fabric and transversely of the fabric whilst retaining other loops on the needles around which they were formed, engaging the forward sides of said extended loops each in the beard of the needle adjacent that around which it was originally formed, said extending and engaging being effected by moving the needles and transfer points only, disengaging said extended loops from the transfer points, engaging the rearward sides of said extended loops in the hooks of hooked knock-over bits and passing said rearward sides over said adjacent needles to form closed turns therearound, and then knitting another course on said needles and continuing said steps.

7. A method of knitting a run resisting fabric such as a ladies' stocking fabric on a straight row of bearded needles including the steps of lowering a plurality of transfer points and engaging them with predetermined needles, lowering the transfer points and needles, engaging the fabric between the needles with knock-over bits and passing loops from around said predetermined needles

to around said transfer points whilst retaining other loops on other needles, raising the needles and transfer points, moving the transfer points rearwardly and drawing the transferred loops, moving the transfer points transversely of the fabric through a distance at least equal to the spacing of the needles, extending the drawn loops transversely and engaging the forward sides of the drawn and extended loops each with the needle adjacent that around from which it was drawn and extended, said drawing, extending and engaging being effected by moving the needles and transfer points only, lowering the needles and engaging said forward sides in the beards of said adjacent needles, raising the transfer points and disengaging said drawn and extended loops therefrom, moving the needles backwardly and further downwardly and engaging the rearward sides of said extended loops in the hooks of hooked knock-over bits and passing said rearward sides over said adjacent needles to invert said extended loops and form closed turns therearound, raising the needles and moving sinkers forwards, and engaging part of the fabric with the sinkers and passing the loops on to the shanks of the needles, and then knitting another course on said needles and continuing said steps.

8. The method according to claim 7 including the step of engaging transfer points with every loop carrying needle and drawing, extending and inverting every loop.

9. The method according to claim 7 including the step of engaging transfer points with alternate loop carrying needles in one course and drawing, extending and inverting loops in alternate wales, and then in the next course engaging transfer points with loop carrying needles intermediate said alternate needles and drawing, extending and inverting loops in wales intermediate said alternate wales.

10. A method of knitting a run-resisting fabric on a straight bar knitting machine having bearded needles, hooked knock-over bits and transfer points, including after the knock-over operation has been completed, the steps of lowering the transfer points each to engage a loop around a predetermined needle corresponding thereto, displacing the needles and transfer points away from one another and drawing said loops rearwardly of the fabric, moving the transfer points transversely of the fabric through a distance at least equal to the spacing of the needles and extending said loops, lowering the needles and engaging portions of the extended loops in the beards of needles adjacent those from around which they were drawn, withdrawing the transfer points and leaving each extended loop engaging around the shank of the needle from which it was drawn and around the beard of the adjacent needle, relatively approaching the needles and knock-over bits to bring the extended part of each loop into the throat under the hook of a knock-over bit, moving the needles along a given path, said given path being such that the tops of the needles follow an approximately arcuate path with the throats of the hooks of the knock-over bits as centre to bring that portion of each extended loop which was behind the beard of the adjacent needle to a position in front of the shank thereof, thus inverting the extended portion of each extended loop to form a closed turn around the shank of the adjacent needle.

11. The method according to claim 10 including the step of drawing and extending every loop.

12. The method according to claim 10 including the steps of extending alternate loops in one course and loops intermediate said alternate loops in the next course.

13. The method according to claim 10 including the step of extending predetermined loops at every course.

14. A method of knitting a run-resisting fabric on a straight bar knitting machine having bearded needles, hooked knock-over bits, sinkers and transfer points, including after the knock-over operation has been completed the steps of lowering the transfer points each to close the beard of a predetermined needle corresponding thereto, displacing the needles and transfer points further

downwardly relatively to the knock-over bits to cause the knock-over bits to push on to the transfer points loops from around those needles which are in contact with the transfer points, displacing the sinkers forwardly to restrain upward movement of the loops and displacing the needles upwardly until the beards thereof are slightly above the loops, displacing the sinkers backwardly to behind the transfer points, then moving the needles and transfer points simultaneously upwardly until the lower ends of the transfer points are above the upper edges of the knock-over bits, displacing the needles forwardly and disengaging them from the transfer points thereby drawing the loops engaged around the transfer points, moving the transfer points transversely of the fabric through a distance at least equal to the spacing of the needles thereby bringing a part of each extended loop into contact with the rear side of the shank of a needle adjacent that from which it was extended, lowering the needles and engaging the said last mentioned loop parts in the beards of the needles adjacent those from around which the extended loops were drawn, further lowering the needles and the transfer points to cause the loops to engage the tops of the knock-over bits, moving the sinkers forwardly to a position in which their noses protrude between the transfer points and moving the transfer points upwardly to cast off the extended loops therefrom and leave each extended loop engaging around the shank of the needle from which it was drawn and around the beard of the adjacent needle, relatively approaching the needles and knock-over bits to bring the extended part of each loop into the throat under the hook of a knock-over bit, moving the needles downwardly, horizontally and upwardly so that the tops of the needles follow an approximately arcuate path with the throats of the hooks of the knock-over bits as centre, thereby bringing that part of each extended loop which was behind the beard of the adjacent needle to a position in front of the shank thereof thus inverting the extended portion of each extended loop to form a closed turn around the shank of the adjacent needle.

15. A method of knitting a run-resisting fabric on a straight bar knitting machine having bearded needles, hooked knock-over bits and transfer points, including after the knock-over operation has been complete, the steps of lowering the transfer points each to close the beard of a predetermined needle corresponding thereto, displacing the needles and transfer points further downwardly relatively to the knock-over bits to cause the knock-over bits to push onto each transfer point the loop from around the needle which is in contact with that transfer point, subsequently raising the needles and transfer points until the lower ends of the transfer points are clear of the upper edges of the knock-over bits whilst simultaneously limiting upward movement of the loops, displacing the needles and transfer points away from one another and drawing said loops rearwardly of the fabric, moving the transfer points transversely of the fabric through a distance at least equal to the spacing of the needles and extending said loops, lowering the needles and engaging portions of the extended loops in the beards of needles adjacent those from around which they were drawn, withdrawing the transfer points and leaving each extended loop engaging around the shank of the needle from which it was drawn and around the beard of the adjacent needle, relatively approaching the needles and knock-over bits and causing another portion of each extended loop to engage the hook of a knock-over bit, and bringing that portion of each extended loop which was behind the beard of the adjacent needle to a position in front of the shank thereof, inverting the extended portion of each extended loop to form a closed turn around the shank of the adjacent needle.

16. A method of knitting a run-resisting fabric on a straight bar knitting machine having bearded needles, hooked knock-over bits and transfer points, including

after the knock-over operation has been completed, the steps of lowering the transfer points each to close the beard of a predetermined needle corresponding thereto, displacing the needles and transfer points further downwardly relatively to the knock-over bits to cause the knock-over bits to push onto each transfer point the loop from around the needle which is in contact with that transfer point, subsequently raising the needles and transfer points until the lower ends of the transfer points are clear of the upper edges of the knock-over bits whilst simultaneously limiting upward movement of the loops, displacing the needles and transfer points away from one another and drawing said loops rearwardly of the fabric, moving the transfer points transversely of the fabric through a distance at least equal to the spacing of the needles and extending said loops, lowering the needles and engaging portions of the extended loops in the beards of needles adjacent those from around which they were drawn, withdrawing the transfer points and leaving each extended loop engaging around the shank of the needle from which it was drawn and around the beard of the

adjacent needle, relatively approaching the needles and knock-over bits to bring the extended part of each loop into the throat under the hook of a knock-over bit, moving the needles along a given path, said given path being such that the tops of the needles follow an approximately arcuate path with the throats of the hooks of the knock-over bits as centre to bring that portion of each extended loop which was behind the beard of the adjacent needle to a position in front of the shank thereof, thus inverting the extended portion of each extended loop to form a closed turn around the shank of the adjacent needle.

References Cited in the file of this patent

UNITED STATES PATENTS

2,055,457	Gastrich	Sept. 22, 1936
2,080,223	Gastrich	May 11, 1937
2,220,781	Clauss	Nov. 5, 1940
2,257,332	Clauss	Sept. 30, 1941

FOREIGN PATENTS

752,466	France	July 17, 1933