(12) INTERNATIONAL APPLICATION PUBLISHED UNDER THE PATENT COOPERATION TREATY (PCT)

(19) World Intellectual Property Organization
International Bureau

(43) International Publication Date
04 July 2019 (04.07.2019)

WIPO | PCT

(10) International Publication Number
WO 2019/130186 A1

(51) International Patent Classification:
G02B 1/00 (2006.01) *B60Q 1/00* (2006.01)
G02B 5/00 (2006.01) *E01F 9/00* (2016.01)
B29D 11/00 (2006.01)

(21) International Application Number:
PCT/IB2018/060475

(22) International Filing Date:
20 December 2018 (20.12.2018)

(25) Filing Language: English

(26) Publication Language: English

(30) Priority Data:
62/611,633 29 December 2017 (29.12.2017) US

(71) Applicant: **3M INNOVATIVE PROPERTIES COMPANY** [US/US]; 3M Center, Post Office Box 33427, Saint Paul, Minnesota 55133-3427 (US).

(72) Inventors: **JONES, Todd D.**; 3M Center, Post Office Box 33427, Saint Paul, Minnesota 55133-3427 (US). **CHENHO, Kui**; 3M Center, Post Office Box 33427, Saint Paul, Minnesota 55133-3427 (US).

(74) Agent: **TÉLLEZ, Carlos M.** et al.; 3M Center, Office of Intellectual Property Counsel, Post Office Box 33427, Saint Paul, Minnesota 55133-3427 (US).

(81) Designated States *(unless otherwise indicated, for every kind of national protection available)*: AE, AG, AL, AM, AO, AT, AU, AZ, BA, BB, BG, BH, BN, BR, BW, BY, BZ, CA, CH, CL, CN, CO, CR, CU, CZ, DE, DJ, DK, DM, DO, DZ, EC, EE, EG, ES, FI, GB, GD, GE, GH, GM, GT, HN, HR, HU, ID, IL, IN, IR, IS, JO, JP, KE, KG, KH, KN, KP, KR, KW, KZ, LA, LC, LK, LR, LS, LU, LY, MA, MD, ME, MG, MK, MN, MW, MX, MY, MZ, NA, NG, NI, NO, NZ, OM, PA, PE, PG, PH, PL, PT, QA, RO, RS, RU, RW, SA, SC, SD, SE, SG, SK, SL, SM, ST, SV, SY, TH, TJ, TM, TN, TR, TT, TZ, UA, UG, US, UZ, VC, VN, ZA, ZM, ZW.

(84) Designated States *(unless otherwise indicated, for every kind of regional protection available)*: ARIPO (BW, GH, GM, KE, LR, LS, MW, MZ, NA, RW, SD, SL, ST, SZ, TZ, UG, ZM, ZW), Eurasian (AM, AZ, BY, KG, KZ, RU, TJ, TM), European (AL, AT, BE, BG, CH, CY, CZ, DE, DK, EE, ES, FI, FR, GB, GR, HR, HU, IE, IS, IT, LT, LU, LV, MC, MK, MT, NL, NO, PL, PT, RO, RS, SE, SI, SK, SM, TR), OAPI (BF, BJ, CF, CG, CI, CM, GA, GN, GQ, GW, KM, ML, MR, NE, SN, TD, TG).

(54) Title: STRUCTURED RETROREFLECTIVE ARTICLE WITH ALIGNED SYMBOLS

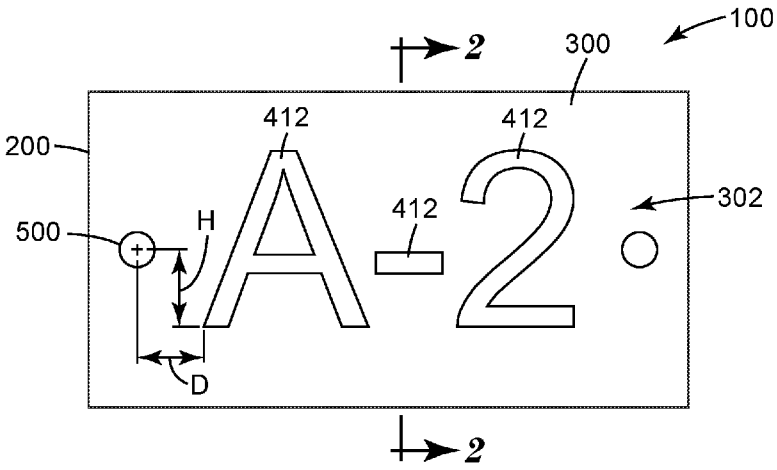

Fig. 1

(57) Abstract: The disclosed structured retroreflective article includes a symbol aligned with raised regions of the structured retroreflective article through an orientation mark which aligns the symbol to the raised region. In one embodiment, the retroreflective article comprises a substrate comprising a background surface and a raised region, a retroreflective film comprising a first symbol and an orientation mark, wherein the retroreflective film is applied to the substrate and the orientation mark aligns the first symbol to the raised region.

WO 2019/130186 A1

[Continued on next page]

Declarations under Rule 4.17:

— *as to applicant's entitlement to apply for and be granted a patent (Rule 4.17(ii))*

— *as to the applicant's entitlement to claim the priority of the earlier application (Rule 4.17(iii))*

Published:

— *with international search report (Art. 21(3))*

— *before the expiration of the time limit for amending the claims and to be republished in the event of receipt of amendments (Rule 48.2(h))*

— *in black and white; the international application as filed contained color or greyscale and is available for download from PATENTSCOPE*

STRUCTURED RETROREFLECTIVE ARTICLE WITH ALIGNED SYMBOLS

Field

The present disclosure relates to a structured retroreflective article with aligned symbols.

Background

Retroreflective films are used on articles such as signs, license plates, or wearable items. The retroreflective film illuminates the article when a light is directed at the article. The retroreflective article might include markings that need to be read and interpreted. The illumination of the retroreflective film can aid in readability of the markings on the article. Some articles require that the marking are placed on raised regions of the article. Typically, the article with the attached retroreflective film is provided with raised regions and then paint is applied to those raised portions.

Summary

The disclosed structured retroreflective article includes a symbol aligned with raised regions of the structured retroreflective article through an orientation mark which aligns the symbol to the raised region. In one embodiment, the retroreflective article comprises a substrate comprising a background surface and a raised region, a retroreflective film comprising a first symbol and an orientation mark, wherein the retroreflective film is applied to the substrate and the orientation mark aligns the first symbol to the raised region.

In one embodiment, the retroreflective film further comprises a second symbol. In one embodiment, the second symbol is contained within the boundaries of the first symbol. In one embodiment, the second symbol is contained entirely within the boundaries of the first symbol. In one embodiment, the first symbol comprises human-readable information and the second symbol comprises embedded machine-readable information. In one embodiment, the first symbol comprises human-readable information detectable under a first condition and not detectable under a second condition and the second symbol comprises embedded machine-readable information not detectable under the first condition and detectable under the second condition. In one embodiment, the first condition is a first spectral range or first lighting condition and the second condition is a second spectral range or second lighting condition, different from the first condition. In one embodiment, the second symbol comprises embedded machine-readable information including at least one embedded-marker comprising a gap and a solid portion, wherein the gap and solid portion in combination correspond to the human-readable information.

In one embodiment, the orientation mark is on a surface of the retroreflective film containing the first symbol. In one embodiment, the orientation mark is on a surface of the retroreflective film opposite from the first symbol. In one embodiment, the orientation mark is apparent in the visible light spectrum. In one embodiment, the orientation mark is not detectable in the visible light spectrum and apparent outside the visible light spectrum. In one embodiment, the orientation mark is not detectable in the visible

light spectrum and apparent in the infrared light spectrum. In one embodiment, the orientation mark is a defined pattern of visible light returned from the retroreflective film. In one embodiment, the retroreflective film comprises optically active regions for returning light, and wherein the optically active regions are in a defined pattern to form the orientation mark.

In one embodiment, the first symbol is a unique identifier. In one embodiment, the first symbol is an alpha numeric character. In one embodiment, the first symbol is in contrast with the background adjacent to the first symbol.

In one embodiment, the retroreflective article further comprises a protective film wherein the first symbol is between the retroreflective film and the protective film.

In one embodiment, the method of making a retroreflective article comprises printing a retroreflective film with a first symbol, wherein the retroreflective film includes an orientation mark at a location relative to the first symbol, applying the retroreflective film to a substrate with the orientation marks in an aligned location on the substrate, and forming raised regions in the substrate and applied retroreflective film that align with the first symbol.

In one embodiment, the method further comprises visually identifying the orientation mark. In one embodiment, visually identifying the orientation mark uses visible light. In one embodiment, visually identifying the orientation mark uses infrared light.

In one embodiment, the first symbol is a unique identifier that corresponds to the raised regions.

In one embodiment, the method further comprises applying the orientation mark to the retroreflective film before applying the retroreflective film to the substrate. In one embodiment, the method further comprises forming a pattern of an optically active region as the orientation mark in the retroreflective film before applying the retroreflective film to the substrate. In one embodiment, the method further comprises printing a pattern of barrier elements on an adhesive before applying the retroreflective film to the substrate, wherein the printed barrier elements form the orientation mark and applying the adhesive with barrier elements to optical elements on the retroreflective film, wherein the adhesive is in contact with the optical elements. In one embodiment, the method further comprises printing a pattern of barrier elements on an adhesive before applying the retroreflective film to the substrate and applying the adhesive with barrier elements to optical elements on the retroreflective film, wherein the adhesive is in contact with the optical elements and wherein the adhesive forms orientation mark.

In one embodiment, the method further comprises applying a protective layer to the retroreflective article over the first symbol before forming raised regions in the substrate.

In one embodiment, the method further comprises printing a retroreflective film with a second symbol. In one embodiment, the second symbol is contained within the boundaries of the first symbol. In one embodiment, the second symbol is contained entirely within the boundaries of the first symbol.

Brief Description of the Drawings

FIG. 1 is a front view of one embodiment of a retroreflective article;

FIG. 2 is a cross-sectional view of the retroreflective article through line 2-2 of FIG. 1;

FIG. 3 is a rear view of one embodiment of a retroreflective article;

FIG. 2 is a front view of the retroreflective article of FIG. 1 in a second lighting condition;

FIG. 5 is a cross-sectional view of one embodiment of a retroreflective sheeting;

FIG. 6 is a side view of one embodiment of a method of making a retroreflective article.

Detailed Description

FIG. 1 is a front view of one embodiment of a retroreflective article 100 with a raised first symbol 410. FIG. 2 is a cross-section view of the retroreflective article 100 through line 2-2 of FIG. 1 depicting the raised symbol 410. As shown in FIG. 1 and 2, the first symbol 410 corresponds to the raised regions on the substrate 200.

The disclosed retroreflective article 100 comprises a substrate 200 and a retroreflective film 300 applied to the substrate 200. The substrate 200 typically is flat and then contoured through a process such as embossing to have a background surface 210 and a raised region 220. The substrate 200 may be formed of any material having the desired rigidity and conformity for forming raised regions 220. For example, the substrate 200 may be metal, plastic, or composite materials.

As shown in FIG. 1, retroreflective film comprises at least a first symbol 410 that is aligned with the raised region 220 and an orientation mark 500. The first symbol 410 displays visual information. The first symbol 410 may be an individual or set of letters, numbers, shapes or combinations thereof. In one embodiment, the first symbol is a unique identifier.

First symbol 410 may be read from the contrast between the first symbol 410 and adjacent portion of the retroreflective film 300 without the first symbol 410. Raising the first symbol 410 relative to the background surface 210 can increase the visibility of the first symbol 410 relative to the background surface 210, unraised portion, of the retroreflective article 100.

The first symbol 410 may be human readable, machine readable, or both. The first symbol 410 may be human readable under a first lighting condition, and human readable under a second lighting condition, which is different from the first lighting condition. The first symbol 410 may be machine readable under a first lighting condition, and machine readable under a second lighting condition, which is different from the first lighting condition. First and second light conditions may include lighting under diffuse light, directional light, retroreflected light, polarized light (circularly polarized or linearly polarized light), light under different wavelength, for example visible or infrared light.

In convention processes, paint is applied to the raised portions of a plate after the retroreflective sheeting is applied to the plate and after the raised regions are included on the plate. In an embodiment of the disclosed retroreflective article 100, the retroreflective film 300 can include the symbol 410 prior to the retroreflective film 300 being placed on the substrate 200 and prior to the substrate 200 having raised

regions 220. Orientation mark 500 is included at a defined location relative to the first symbol 410 to provide orientation of the first symbol 410 to a location on the substrate 200 where the raised region 220 will be formed.

As shown in FIG. 1, orientation mark 500 is located on a first surface 302 of the retroreflective film 300, which also contains the first symbol 410. The orientation mark 500 is on the retroreflective sheeting 300 at a defined location relative to the first symbol 410 so that the first symbol 410 can be aligned to the area that will be the raised region 220 of the substrate 200. For example, as shown in FIG. 1, a center of the orientation mark 500 is located at a distance "D" from a lowermost, left end of the first symbol 410, and at a height "H" from that same lowermost, left end of the first symbol 410. The orientation mark 500 is used to apply the retroreflective sheeting 300 relative to a known location on the substrate 200. It is understood that any number of ways to determine and define the location of the orientation mark 500 relative to the first symbol 410 can be used. For example, the location on the substrate 200 providing the reference to the orientation mark 500 could be an edge, a corner, or a pre-marked portion of the substrate 200.

The orientation mark 500 is visually apparent under a light condition. The light conditions may include diffuse light, directional light, retroreflected light, polarized light (circularly polarized or linearly polarized light), light under different wavelength, for example visible or infrared light. In one embodiment, the orientation mark 500 is apparent under diffuse light or retroreflected light or both. In one embodiment, the orientation mark 500 is apparent under light in the visible light spectrum or outside the visible light spectrum, or both. In one embodiment, to make the orientation mark 500 less conspicuous to the human eye, the orientation mark 500 is only apparent outside the visible light spectrum, such as by infrared light.

The orientation mark 500 could be formed from printing on the retroreflective film 300. The print could be visibly apparent inks, visibly transparent but apparent outside the visible light range, such as infrared visible, or could be a retarder ink. Therefore, a printed orientation mark 500 could be apparent to a human eye, a camera (visible camera, or IR reading cameras, for example), or both. The contrast between the orientation mark 500 and the adjacent area on the retroreflective film 300 makes the orientation mark 500 apparent.

The orientation mark 500 could be formed as a region of the retroreflective film 300 that returns light, an active region, in a manner that is different, and distinguishable from the retroreflective film 300 at the background surface 210. For example, the retroreflective film 300 may return light in a defined pattern at the active region. Therefore, when a light source directs light onto the retroreflective film 330, a visibly apparent bright spot, pattern, or shape (i.e., retroreflected light) at the active region is distinguishable as the orientation mark 500. With reference to FIG. 5, barrier elements 324 could be applied in a size, shape, or arrangement to provide an active regions forming the orientation mark 500. For other arrangements of retroreflective films, selective placement of the optically active areas can form the orientation mark 500.

The orientation mark 500 could be formed as region of the retroreflective film 300 that does not return light, an inactive region, in a manner that is different, and distinguishable for the retroreflective film 300 at the background surface 210. Therefore, when a light source directs light onto the retroreflective film 330, a visibly apparent dark spot (i.e., no light return) at the active region is distinguishable for the orientation mark 500. With reference to FIG. 5, adhesive 340 could be applied in a size, shape, or arrangement to provide an inactive regions forming the orientation mark 500. For other arrangements of retroreflective films, selective placement the optically inactive areas can form the orientation mark 500.

The orientation mark 500 could be formed by using a retarder with a phase-reversing reflector when viewing with a corresponding transceiver systems, such as disclosed in US Patent Application 62/578,191 filed on October 27, 2017 (attorney docket number 80109US002). For example, the orientation mark could be the portion comprising the retarder. Alternatively, the substrate 200 could include a retarder with the portion for the orientation mark not having the retarder. For example, the retarder could be a film or a printed liquid crystal.

As shown in FIG. 3, the orientation mark 500, such as described above, could be on a second surface 303 of the retroreflective sheeting 300, which is the surface opposite from the first surface 302 that contains the first symbol 300.

In one embodiment, a second symbol 420 is applied to the retroreflective sheeting 300. FIG. 4, shows the second symbol 420 within the retroreflective sheeting 300 of FIG. 1. As shown in this embodiment, the second symbol 420 is contained within the boundaries of the first symbol 410, and specifically is contained entirely within the boundaries of the first symbol 410. Use of a first and second symbol is described in more detail in PCT Publications WO2013/149142 and WO2017/034968, the disclosures of which are herein incorporated by reference.

In one embodiment, the first symbol 410 comprises human-readable information and the second symbol 420 comprises embedded machine-readable information. In one embodiment, the first symbol 410 comprises human-readable information detectable under a first condition and not detectable under a second condition and the second symbol 420 comprises embedded machine-readable information not detectable under the first condition and detectable under the second condition. The first condition may be, for example, a first spectral range or first lighting condition and the second condition may be a second spectral range or second lighting condition, different from the first condition.

In one embodiment, as shown in FIG. 4, the second symbol 420 comprises embedded machine-readable information including at least one embedded-marker comprising a gap 425 and a solid portion 427, wherein the gap 425 and solid portion 427 in combination correspond to the human-readable information in the first symbol 410. It is understood that various configurations of machine readable information, e.g. bar codes, QR codes, or any arrangement that can provide a code could use used.

FIG. 5 discloses one embodiment of a retroreflective film 300. The retroreflective film 300 shown in FIG. 5 comprises optical elements 310, an adhesive layer 340, and barrier elements 324 applied to the

adhesive layer 340. Portions of the adhesive layer 340 contact the optical elements 310, which form optically inactive portions that do not substantially retroreflect incoming light, and portion of the adhesive layer 340 containing the barrier elements 324 form pockets of air adjacent to the optical elements 310, which form optically active portions that retroreflect incoming light. For example, U.S. Patent Application Publication 2013/0034682, incorporated herein by reference discloses a retroreflective film with an adhesive layer and barrier elements.

The retroreflective film 300 can be any number of retroreflective materials used to return light to a light source. Retroreflective films comprise optical elements for returning the incoming light. For example, optical elements could be glass or ceramic beads with an adjacent reflecting layer, such as a metalized layer or a dielectric stack to cause the incoming light to retroreflect, such as shown in U.S. Patent 9,110,235, incorporated herein by reference. For example, optical elements can be microstructures with a cube corner to return light. Microstructures could be, for example any number of shapes such as truncated cubes or full cubes. A reflecting layer may be adjacent to the microstructure, or a material of significantly different refractive index to the material of the microstructure can be adjacent to the microstructure to cause the incoming light to retroreflect. Commonly, air is adjacent to the microstructure. U.S. Patent 8,371,703, incorporated herein by reference discloses a truncated cube retroreflective film. U.S. Patent 7,156,527, incorporated herein by reference discloses a full cube retroreflective film.

The retroreflective film might include a sealing layer with portions of the sealing layer contacting the microstructures, which form optically inactive portions, and portion of the sealing layer forming pockets of air adjacent to the microstructures, which form optically active portions. For example, U.S. Patent 9,366,789, incorporated herein by reference discloses a retroreflective film with a sealing layer.

The retroreflective article 100 may further comprise a protective film 350, like shown in FIG. 2. Typically, the first symbol 410 (and second symbol if included) is between the retroreflective film 300 and the protective film 350. The retroreflective film 300 may include an adhesive for securing the retroreflective film to the substrate 200.

FIG. 6 is a side view of a process for making retroreflective article 100. In this process, orientation mark 500 is formed in the retroreflective sheeting 300. As described above, this could be a printing process applied to a surface of a retroreflective film 300. In another embodiment, the orientation mark 500 could be formed during the creation of the retroreflective film 300, if the orientation mark 500 is either an optically active or optically inactive area of the retroreflective film 300. For example, a specific pattern of barrier elements could be plated at determined locations of the retroreflective film 300.

The second symbol 420, if included, is applied, and then the overlying first symbol 410 is applied. In some embodiments, the second symbol 420 may be placed overlying the first symbol 410. A sensor, such as a camera, is used to locate the orientation mark 500 to inform a system for placement of the first symbol 410 (and second symbol 420, if included) at a location relative to the orientation mark 500. This sensor may rely on visible light, light outside visible like infrared, directional light, polarized light, retroreflected light, or diffuse light to identify the orientation mark 500.

If the orientation mark 500 is an applied marking, such as printing, then the first symbol 410 and second symbol 420, if included, could be applied to the retroreflective film 300 first and then the orientation mark 500 can be placed on the retroreflective film 300 as a determined location relative to the first symbol 410 or second symbol 420.

The retroreflective film 300 containing the orientation mark 500, first symbol 410, and second symbol 420, if included, is then applied to the substrate 200, which is pressed to formed raised regions 220. A sensor, such as a camera, is used to locate the orientation mark 500 and inform a system for placement of the first symbol 410 and second symbol 420, if included, to the location of the raised regions 220. This sensor may rely on visible light, light outside visible like infrared, directional light, polarized light, retroreflected light, or diffuse light to identify the orientation mark 500.

In one embodiment, the orientation mark 500 is an arrangement of either the adhesive 340 or barrier element 324 (FIG. 5), to form either optically inactive regions or optically active regions, respectively. Therefore, in FIG. 1, the orientation mark 500 is formed within the retroreflective film 300. A pattern of barrier elements is printed on an adhesive before applying the retroreflective film 300 to the substrate 200.

A protective layer 350 is applied after the symbols 410, 420 are formed on the retroreflective article 300. In one embodiment, the protective layer is applied prior to the raised regions 220 being formed in the substrate 200.

The disclosed retroreflective article supports a method of forming onto the retroreflective film symbols prior to the film application to the substrate and prior to the substrate having the raised regions. Therefore, the symbols on a retroreflective film can be produced on a continuously extending sheet of retroreflective film. This could achieve manufacturing efficiencies or security around unique identifiers on for each retroreflective article. Further, this allows for first and second symbols to be easily included onto the retroreflective film as compared to conventional techniques, which apply a paint to already-formed raised regions. Conventional techniques would not easily allow for multilayer materials to be included when the symbols are applied after formation of the raised regions.

Although specific embodiments have been shown and described herein, it is understood that these embodiments are merely illustrative of many possible arrangements. Numerous and varied other arrangements can be devised by those of skill in the art without departing from the spirit and scope of the invention. Thus, the scope of the present invention should not be limited to the structures described in this application, but only by the structures described by the language of the claims and the equivalents of those structures. The figures may not be drawn to scale.

Illustrative Embodiments

1. A retroreflective article comprising:

a substrate comprising a background surface and a raised region;

a retroreflective film comprising a first symbol and an orientation mark;

wherein the retroreflective film is applied to the substrate and the orientation mark aligns the first symbol to the raised region.

2. The retroreflective article of any one of the preceding embodiments, wherein the retroreflective film further comprises a second symbol.

3. The retroreflective article of any one of the preceding embodiments, wherein the second symbol is contained within the boundaries of the first symbol.

4. The retroreflective article of any one of the preceding embodiments, wherein the second symbol is contained entirely within the boundaries of the first symbol.

5. The retroreflective article of any one of the preceding embodiments, wherein the first symbol comprises human-readable information and the second symbol comprises embedded machine-readable information.

6. The retroreflective article of any one of the preceding embodiments, wherein the first symbol comprises human-readable information detectable under a first condition and the second symbol comprises embedded machine-readable information detectable under the second condition.

7. The retroreflective article of any one of the preceding embodiments, wherein the first symbol comprises human-readable information detectable under a first condition and not detectable under a second condition and the second symbol comprises embedded machine-readable information not detectable under the first condition and detectable under the second condition.

8. The retroreflective article of any one of the preceding embodiments, wherein the first condition is a first spectral range or first lighting condition and the second condition is a second spectral range or second lighting condition, different from the first condition.

9. The retroreflective article of any one of the preceding embodiments, wherein:

the second symbol comprises embedded machine-readable information including at least one embedded-marker comprising a gap and a solid portion, wherein the gap and solid portion in combination correspond to the human-readable information.

10. The retroreflective article of any one of the preceding embodiments, wherein the orientation mark is on a surface of the retroreflective film containing the first symbol.

11. The retroreflective article of any one of the preceding embodiments, wherein the orientation mark is on a surface of the retroreflective film opposite from the first symbol.

12. The retroreflective article of any one of the preceding embodiments, wherein the orientation mark is apparent in the visible light spectrum.

13. The retroreflective article of any one of the preceding embodiments, wherein the orientation mark is transparent in the visible light spectrum and apparent outside the visible light spectrum.

14. The retroreflective article of any one of the preceding embodiments, wherein the orientation mark is transparent in the visible light spectrum and apparent in the infrared light spectrum.

15. The retroreflective article of any one of the preceding embodiments, wherein the orientation mark is a defined pattern of visible light returned from the retroreflective film.

16. The retroreflective article of any one of the preceding embodiments, wherein retroreflective film comprises optically active regions for returning light, and wherein the optically active regions are in a defined pattern to form the orientation mark.

17. The retroreflective article of any one of the preceding embodiments, wherein the first symbol is a unique identifier.

18. The retroreflective article of any one of the preceding embodiments, wherein the first symbol is an alpha numeric character.

19. The retroreflective article of any one of the preceding embodiments, wherein the first symbol is in contrast with the background adjacent to the first symbol.

20. The retroreflective article of any one of the preceding embodiments, further comprises a protective film wherein the first symbol is between the retroreflective film and the protective film.

21. A method of making a retroreflective article comprising:

applying a first symbol and orientation mark to a retroreflective film, wherein the orientation mark is at a location relative to the first symbol;

applying the retroreflective film to a substrate with the orientation marks in an aligned location on the substrate;

forming raised regions in the substrate and applied retroreflective film that align with the first symbol.

22. The method of making the retroreflective article of embodiment 21, wherein the first symbol is applied to the retroreflective film comprising the orientation mark.

23. The method of making a retroreflective article of any one of embodiments 21-22, further comprising:

visually identifying the orientation mark.

24. The method of making a retroreflective article of embodiment 23, wherein the visually identifying the orientation mark uses one of visible light, infrared light, directional light, polarized light, retroreflected light.

25. The method of making a retroreflective article of any one of embodiments 21-24, wherein the first symbol is a unique identifier that corresponds to the raised regions.

26. The method of making a retroreflective article of any one of embodiments 21-25, comprising:

applying the orientation mark to the retroreflective film before applying the retroreflective film to the substrate.

27. The method of making a retroreflective article of any one of embodiments 21-26, comprising:

forming a pattern of an optically active region as the orientation mark in the retroreflective film before applying the retroreflective film to the substrate.

28. The method of making a retroreflective article of any one of embodiments 21-27, comprising:

printing a pattern of barrier elements on an adhesive before applying the retroreflective film to the substrate, wherein the printed barrier elements form the orientation mark;

applying the adhesive with barrier elements to optical elements on the retroreflective film, wherein the adhesive is in contact with the optical elements.

29. The method of making a retroreflective article of any one of embodiments 21-28, comprising:

printing a pattern of barrier elements on an adhesive before applying the retroreflective film to the substrate;

applying the adhesive with barrier elements to optical elements on the retroreflective film, wherein the adhesive is in contact with the optical elements and wherein the adhesive forms orientation mark.

30. The method of making a retroreflective article of any one of embodiments 21-29, comprising:

applying a protective layer to the retroreflective article over the first symbol before forming raised regions in the substrate.

31. The method of making a retroreflective article of any one of embodiments 21-30, comprising printing a retroreflective film with a second symbol.

32. The method of making a retroreflective article of embodiment 31, wherein the second symbol is contained within the boundaries of the first symbol.

33. The method of making a retroreflective article of embodiment 31, wherein the second symbol is contained entirely within the boundaries of the first symbol.

What is claimed is:

1. A retroreflective article comprising:
    a. a substrate comprising a background surface and a raised region;
    b. a retroreflective film comprising a first symbol and an orientation mark;
    c. wherein the retroreflective film is applied to the substrate and the orientation mark aligns the first symbol to the raised region.

2. The retroreflective article of any one of the preceding claims, wherein the retroreflective film further comprises a second symbol.

3. The retroreflective article of any one of the preceding claims, wherein the second symbol is contained within the boundaries of the first symbol.

4. The retroreflective article of any one of the preceding claims, wherein the first symbol comprises human-readable information and the second symbol comprises embedded machine-readable information.

5. The retroreflective article of any one of the preceding claims, wherein the first symbol comprises human-readable information detectable under a first condition and the second symbol comprises embedded machine-readable information detectable under the second condition.

6. The retroreflective article of any one of the preceding claims, wherein the first symbol comprises human-readable information detectable under a first condition and not detectable under a second condition and the second symbol comprises embedded machine-readable information not detectable under the first condition and detectable under the second condition.

7. The retroreflective article of any one of the preceding claims, wherein:
    the second symbol comprises embedded machine-readable information including at least one embedded-marker comprising a gap and a solid portion, wherein the gap and solid portion in combination correspond to the human-readable information.

8. The retroreflective article of any one of the preceding claims, wherein the orientation mark is on a surface of the retroreflective film containing the first symbol.

9. The retroreflective article of any one of the preceding claims, wherein the orientation mark is apparent in the visible light spectrum.

10. The retroreflective article of any one of the preceding claims, wherein the orientation mark is transparent in the visible light spectrum and apparent outside the visible light spectrum.

11. The retroreflective article of any one of the preceding claims, wherein retroreflective film comprises optically active regions for returning light, and wherein the optically active regions are in a defined pattern to form the orientation mark.

12. The retroreflective article of any one of the preceding claims, wherein the first symbol is an alpha numeric character.

13. The retroreflective article of any one of the preceding claims, wherein the first symbol is in contrast with the background adjacent to the first symbol.

14. The retroreflective article of any one of the preceding claims, further comprises a protective film wherein the first symbol is between the retroreflective film and the protective film.

15. A method of making a retroreflective article comprising:
applying a first symbol and orientation mark to a retroreflective film, wherein the orientation mark is at a location relative to the first symbol;
applying the retroreflective film to a substrate with the orientation marks in an aligned location on the substrate;
forming raised regions in the substrate and applied retroreflective film that align with the first symbol.

16. The method of making a retroreflective article of claim 15, further comprising:
visually identifying the orientation mark.

17. The method of making a retroreflective article of claim 16, wherein the visually identifying the orientation mark uses one of visible light, infrared light, directional light, polarized light, retroreflected light.

18. The method of making a retroreflective article of any one of the preceding claims directed to a method of making a retroreflective article, comprising:
a. applying the orientation mark to the retroreflective film before applying the retroreflective film to the substrate.

19. The method of making a retroreflective article of any one of c the preceding claims directed to a method of making a retroreflective article, comprising:

printing a pattern of barrier elements on an adhesive before applying the retroreflective film to the substrate, wherein the printed barrier elements form the orientation mark;

applying the adhesive with barrier elements to optical elements on the retroreflective film, wherein the adhesive is in contact with the optical elements.

20. The method of making a retroreflective article of any one of the preceding claims directed to a method of making a retroreflective article, comprising printing a retroreflective film with a second symbol.

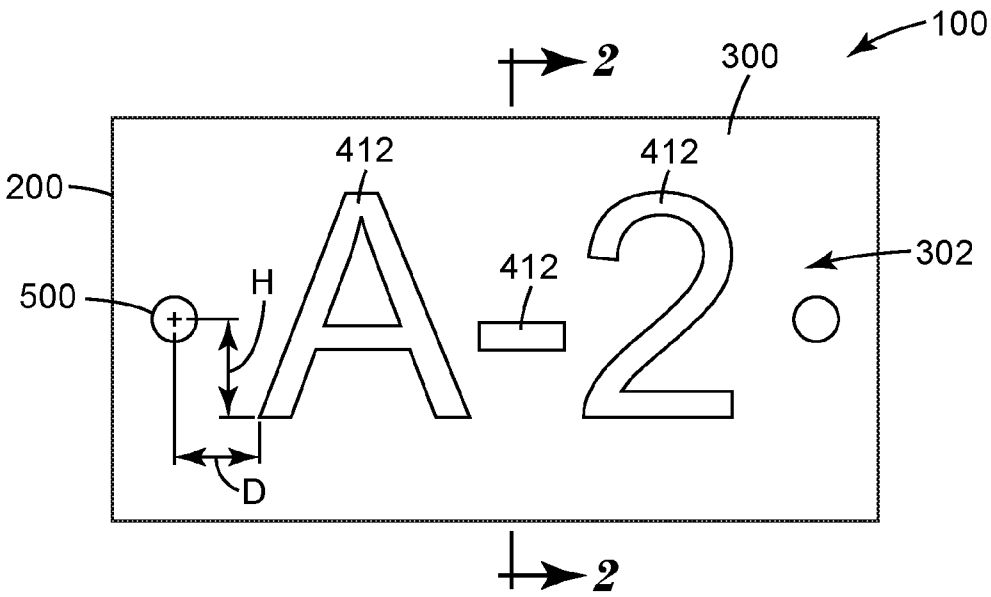

Fig. 1

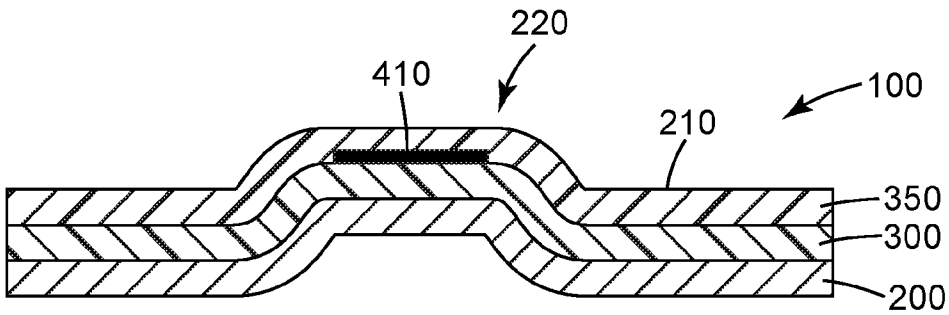

Fig. 2

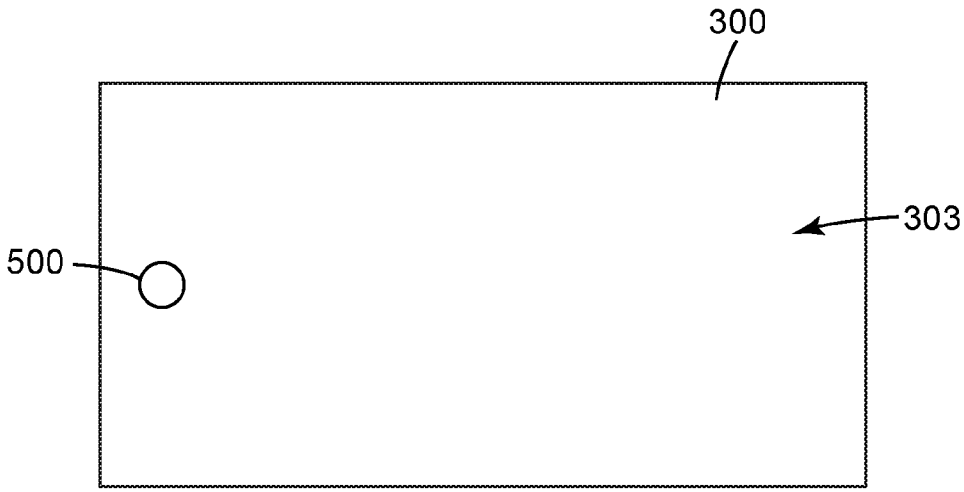

Fig. 3

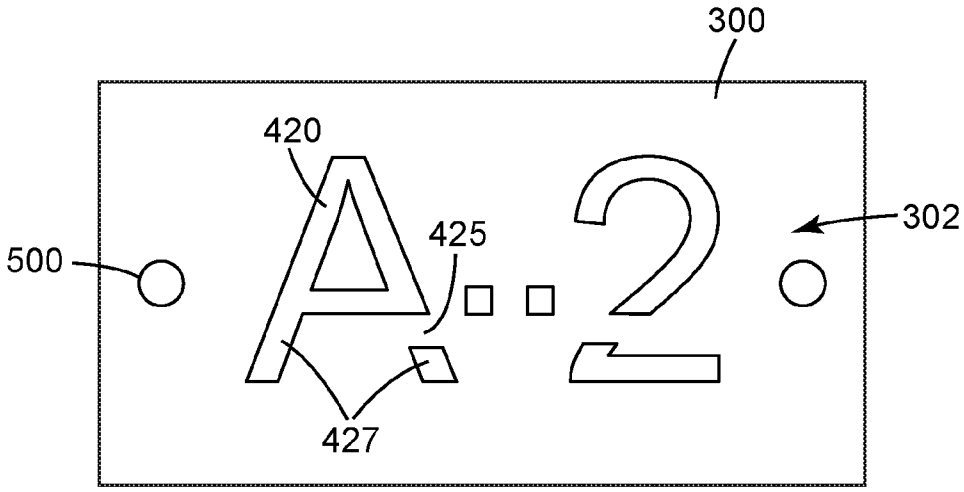

Fig. 4

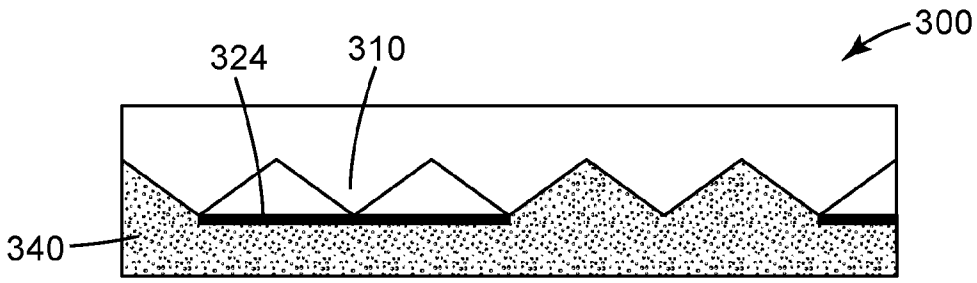

Fig. 5

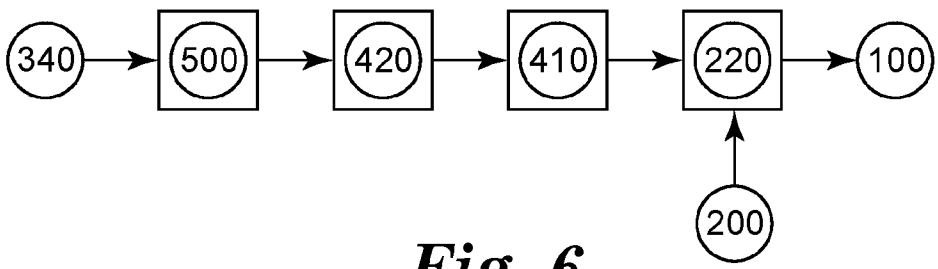

Fig. 6

INTERNATIONAL SEARCH REPORT

International application No.
PCT/IB 18/60475

A. CLASSIFICATION OF SUBJECT MATTER

IPC(8) - G02B 1/00, G02B 5/00, B29D 11/00, B60Q 1/00, E01F 9/00 (2019.01)
CPC - G02B 1/00, G02B 5/00, G02B 5/12, G02B 5/126, B29D 11/00, B41M 3/00, B41M 3/14, B41M 3/148, B29L 2011/00, B29L 2011/0083, B29L 2011/0091, B32B 2307/40, B32B 2307/416, B32B 2551/00, B60Q 1/00, B60Q 1/26, E01F 9/00, E01F 9/604, E01F 9/619, G09F 13/16, B44F 1/02

According to International Patent Classification (IPC) or to both national classification and IPC

B. FIELDS SEARCHED

Minimum documentation searched (classification system followed by classification symbols)

See Search History Document

Documentation searched other than minimum documentation to the extent that such documents are included in the fields searched

See Search History Document

Electronic data base consulted during the international search (name of data base and, where practicable, search terms used)

See Search History Document

C. DOCUMENTS CONSIDERED TO BE RELEVANT

Category*	Citation of document, with indication, where appropriate, of the relevant passages	Relevant to claim No.
X	US 8,726,551 B2 (Peck et al.) 20 May 2014 (20.05.2014), entire document, especially Fig 1, 1A, 1B, 2, 6; col 1 ln 38-41; col 2 ln14-15, ln 29-31, ln 36-38, ln 41-44, ln 53-56; col 3 ln 24-26	1-3, 15-17
A	WO 2017/034968 A1 (3M INNOVATIVE PROPERTIES COMPANY) 02 March 2017 (02.03.2017), entire document	1-3, 15-17
A	US 2007/0209244 A1 (Prollius et al.) 13 September 2007 (13.09.2007), entire document	1-3, 15-17
A	US 2009/0141512 A1 (Eberwein) 04 June 2009 (04.06.2009), entire document	1-3, 15-17
A	WO 95/26281 A (Minnesota Mining and Manufacturing Company) 05 October 1995 (05.10.1995), entire document	1-3, 15-17

☐ Further documents are listed in the continuation of Box C. ☐ See patent family annex.

* Special categories of cited documents:
"A" document defining the general state of the art which is not considered to be of particular relevance
"E" earlier application or patent but published on or after the international filing date
"L" document which may throw doubts on priority claim(s) or which is cited to establish the publication date of another citation or other special reason (as specified)
"O" document referring to an oral disclosure, use, exhibition or other means
"P" document published prior to the international filing date but later than the priority date claimed
"T" later document published after the international filing date or priority date and not in conflict with the application but cited to understand the principle or theory underlying the invention
"X" document of particular relevance; the claimed invention cannot be considered novel or cannot be considered to involve an inventive step when the document is taken alone
"Y" document of particular relevance; the claimed invention cannot be considered to involve an inventive step when the document is combined with one or more other such documents, such combination being obvious to a person skilled in the art
"&" document member of the same patent family

Date of the actual completion of the international search	Date of mailing of the international search report
28 March 2019	26 APR 2019

Name and mailing address of the ISA/US	Authorized officer:
Mail Stop PCT, Attn: ISA/US, Commissioner for Patents P.O. Box 1450, Alexandria, Virginia 22313-1450 Facsimile No. 571-273-8300	Lee W. Young PCT Helpdesk: 571-272-4300 PCT OSP: 571-272-7774

INTERNATIONAL SEARCH REPORT

International application No.
PCT/IB 18/60475

Box No. II Observations where certain claims were found unsearchable (Continuation of item 2 of first sheet)

This international search report has not been established in respect of certain claims under Article 17(2)(a) for the following reasons:

1. ☐ Claims Nos.:
because they relate to subject matter not required to be searched by this Authority, namely:

2. ☐ Claims Nos.:
because they relate to parts of the international application that do not comply with the prescribed requirements to such an extent that no meaningful international search can be carried out, specifically:

3. ☒ Claims Nos.: 4-14, 18-20
because they are dependent claims and are not drafted in accordance with the second and third sentences of Rule 6.4(a).

Box No. III Observations where unity of invention is lacking (Continuation of item 3 of first sheet)

This International Searching Authority found multiple inventions in this international application, as follows:

1. ☐ As all required additional search fees were timely paid by the applicant, this international search report covers all searchable claims.

2. ☐ As all searchable claims could be searched without effort justifying additional fees, this Authority did not invite payment of additional fees.

3. ☐ As only some of the required additional search fees were timely paid by the applicant, this international search report covers only those claims for which fees were paid, specifically claims Nos.:

4. ☐ No required additional search fees were timely paid by the applicant. Consequently, this international search report is restricted to the invention first mentioned in the claims; it is covered by claims Nos.:

Remark on Protest

☐ The additional search fees were accompanied by the applicant's protest and, where applicable, the payment of a protest fee.

☐ The additional search fees were accompanied by the applicant's protest but the applicable protest fee was not paid within the time limit specified in the invitation.

☐ No protest accompanied the payment of additional search fees.