Feb. 22, 1949. J. P. CATLIN 2,462,305

EXPLOSIVE DEVICE

Filed Nov. 23, 1944

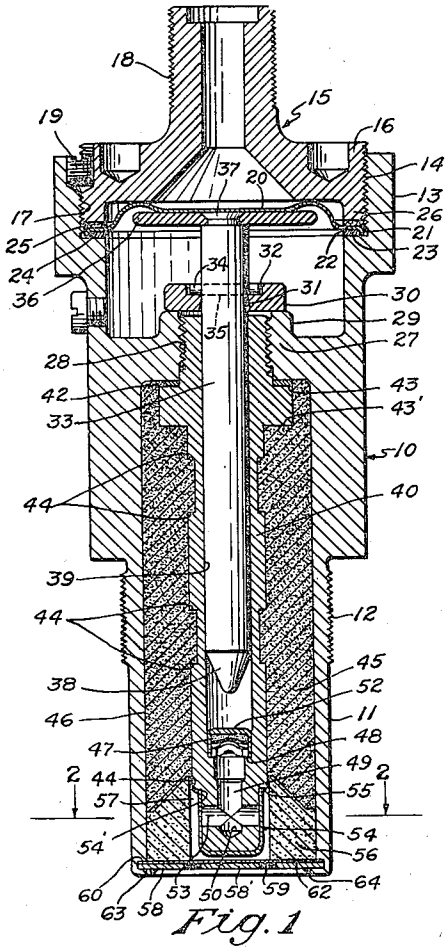

Fig. 1

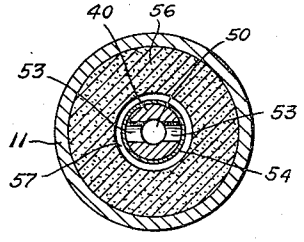

Fig. 2

INVENTOR.
John P. Catlin
BY Harold L. Cavenaugh
AGENT

Patented Feb. 22, 1949 2,462,305

UNITED STATES PATENT OFFICE

2,462,305

EXPLOSIVE DEVICE

John P. Catlin, Fairfield, Conn., assignor to Remington Arms Company, Inc., Bridgeport, Conn., a corporation of Delaware

Application November 23, 1944, Serial No. 564,748

2 Claims. (Cl. 102—70)

1

This invention relates to torpedo igniters of the general type shown in the patent to Moore, No. 1,935,126, November 14, 1933, and has for its object the improvement of the igniter shown in said patent, with a view to overcoming certain defects and inadequacies which have been found to be inherent in the patented construction.

The torpedo igniter may be described as a device for insertion in the wall of the combustion pot of a torpedo for the purpose of igniting the liquid fuel and air mixture which begins to be injected into the combustion pot at the time the torpedo is launched and which builds up considerable pressure in the pot before the igniter is fired. At least two factors are known to affect the ignition of the fuel and air mixture adversely, and hence to render the operation of the torpedo uncertain. The launching of torpedoes, particularly from the air, may impose repeated severe shocks and strains thereon. The torpedo may be dropped a distance of several feet through the air onto the surface of water while it is moving forward with considerable velocity. There is a substantial impact when the torpedo first strikes the water, and the torpedo may thereafter repeatedly "skip," producing additional severe shocks. On initial impact with the water, a suitable trigger or trip lever of the torpedo is actuated to initiate firing of the igniter. If the firing mechanism is complicated or improperly designed, the force of this initial impact may disable or otherwise render the firing mechanism inoperative. Or the flame of combustion which may have been initiated in the combustion pot by a properly operating igniter may be extinguished by the shock of such impacts. Secondly, the torpedo igniter is adapted to deliver its flame directly into the combustion chamber or pot in which considerable air pressure has been already built up as hereinafter described. The igniter is provided with a seal to protect its firing device from this pressure prior to ignition, but, if this seal has been rendered defective through gassing, that is to say, the development of gas pressure within the igniter itself due to decomposition of the igniter mixtures over long periods of storage or because of pin point leaks or punctures, then the air pressure within the combustion chamber will act against the firing device before ignition has been initiated, and hence interfere or prevent the operation of the igniter.

It is necessary, therefore, for successful operation that the firing mechanism of an igniter be designed to operate positively even though subjected to severe impact forces and that an igniter

2

furnish a flame which will not be extinguished by shock and will continue to burn continuously for a time of the order of one minute to insure continuance of the combustion necessary to propulsion of the torpedo; and that the operation of the igniter shall be made certain by positively sealing its firing device against back pressure from the combustion pot.

In the drawing:

Fig. 1 is a sectional side elevation of the improved torpedo igniter embodying the present invention.

Fig. 2 is a transverse section on line 2—2 of Fig. 1.

Referring to the drawing, the igniter embodying this invention comprises a cylindrical body indicated generally at 10 having an extension 11 of reduced diameter provided with exterior screw threads 12 by which the igniter may be threadedly secured in the wall of the combustion chamber of a torpedo as described fully in the aforementioned Moore patent. The upper end of the igniter has a head 13 of greater diameter than the body 10 and is provided with internal threads 14 for securing a plug 15 in the open end of the head, the base 16 of the plug being threaded externally as at 17 for this purpose. A nipple 18 extends upwardly from the plug and is threaded externally to provide means for securing a fitting thereto for connecting the igniter to a compressed air line. A set screw 19 is shown for locking the plug 15 in the head 13 of the igniter.

The plug 15 is adapted to secure a pressure responsive device such as the diaphragm 20 in the open end of the head 13. The diaphragm is preferably formed of cartridge brass and annealed to a dead soft condition. Since the life of the diaphragm is only one cycle, it is possible to use working stresses well over the yield point of the metal and thus to secure relatively large movement of the diaphragm. Moreover, the specific contour of the diaphragm shown also provides for relatively large movement for the purpose hereinafter described.

The periphery 21 of the outer edge 22 of the diaphragm is bent at substantially right angles, as shown, and circumscribes the periphery of a washer 23 which in the present embodiment comprises soft annealed copper. The latter seats on an internal shoulder 24 of the head 13 and is adapted to support the outer edge 22 of the diaphragm. A second washer comprising a fiber insulating material is shown at 25 seated on the top surface of the outer edge 22 of the diaphragm. By screwing the plug 15 down into the head 13,

a skirted portion 26 of the plug will be brought into engagement with the upper fiber washer 25 and will effectively clamp the washers 23 and 25 and the interposed edge 22 of the diaphragm firmly down on the shoulder 24 of the igniter head 13 so as to form a tight seal.

The igniter body 10 is shown provided adjacent its upper end with an internal bridge 27 which is apertured as at 28, the aperture being provided with screw threads for threadedly supporting an ignition tube hereinafter described. The upper surface of the bridge 27 is provided with a central boss 29 concentric with the aperture 28. The boss is adapted to support a shear die 30 which comprises a disk having a central aperture 31 and a concentric counterbore 32 in its top surface. The central aperture 31 is flared slightly at its lower end, as shown, so as to provide angular clearance to prevent any binding between the walls of the aperture and a striker or firing pin 33 which passes through the aperture and which is supported therein by a shear pin 34. The angular clearance of the die aperture also obviates any frictional drag which might otherwise occur as the severed portion of the shear pin passes through the die aperture.

As shown, the shear pin 34 passes through a transverse hole 35 of the firing pin, the opposite ends of the shear pin extending substantially equal distances on opposite sides of the firing pin 33 and being supported on the bottom of the counterbore 32. By this construction, the shear pin is located substantially centrally with respect to the diaphragm 20 and firing pin 33.

The firing pin is provided with a thrust disk 36 which is shown secured to the upper end of the firing pin and concentric with its longitudinal axis by a rivet 37 or other similar fastening means. The firing pin is adapted to be supported within the igniter by the aforedescribed means so that the thrust disk 36 is in direct and positive engagement with the underside of the diaphragm 20 when the latter is in its normal or unstressed position, the longitudinal axis of the striker or firing pin being coaxial with the center of the diaphragm, the latter corresponding to the point of maximum displacement thereof. The firing pin comprises a substantially cylindrical stem, the lower end of which is provided with a tapered point 38 having a rounded apex. For optimum performance, the point 38 is heat treated for hardness.

The shank of the firing pin is guided by and has a smooth sliding fit in the cylindrical bore 39 of an ignition tube 40 which is rigidly fastened in the igniter by threadedly securing the upper end of the tube in the aperture 28 of the bridge 29. The threaded connection between the ignition tube 39 and bridge 29 is sealed by means of a gasket 42 which may be copper or other suitable material, the gasket being compressed tightly between the underside of the bridge 29 and a shoulder 43 of the ignition tube 40 when the latter is screwed up into the aperture of the bridge. The ignition tube is nonuniform in cross section, its outer surface being provided with a series of annular shoulders 44 which are adapted to provide means for preventing an ignition mixture 45 from being displaced longitudinally within the igniter. Moreover, the overall diameter of the shank of the ignition tube is less than the diameter of the aforesaid shoulder 43 so that the opposite side of the shoulder presents a pressure surface 43'. Thus, in the event gas develops in the igniter due to leakage or powder decomposition, it will act against the pressure surface 43' of the ignition tube and tighten the gasket 42 against its seat.

The ignition mixture or main burning charge 45 is a composition comprising substantially 18% potassium perchlorate, 47% barium nitrate, 22% powdered shellac, 6% wood flour and 7% hexachloral benzine, and is tightly packed in the annular space between the smooth cylindrical inner walls 46 of the body 10 and extension 11 of the igniter and the outer shouldered surface of the ignition tube 40. The specific ignition mixture described has a long burning time and liberates sufficient heat to ignite the fuel in the combustion chamber of the torpedo with certainty.

The lower end of the bore 39 of the ignition tube 40 is reduced in diameter to provide an annular restriction 47, an annular shoulder 48 and a relatively short axial flash passage 49 which terminates in a closed end 50 short of the end of the ignition tube 40. The shoulder 48 is adapted to support a percussion primer 52 which has a relatively tight fit in the restriction 47 of the bore 39 so as to be held firmly on the shoulder 48. The flash passage 49 is intersected adjacent its lower end by a transverse passage 53 which is formed through the lower end of the tube coaxial with a diameter thereof and at right angles to the flash passage 49.

The transverse passage 53 is sealed at its outer ends by means of a cap 54 which comprises a relatively thin extruded or drawn zinc cup dimensioned to make a snug fit over the lower end of the ignition tube 40. The length of the cup is such that its lip 54' is adapted to abut the lowest shoulder 44 of the ignition tube while the closed end of the cup fits closely over the end of the ignition tube. The cap is firmly secured to the tube by applying solder 55 or other equivalent fastening means to the junction of the shoulder 44 of the tube and the lip 54' of the cup. The cup thus provides means for positively sealing the interior of the ignition tube so that the ignition means, that is to say, the diaphragm 20, firing pin 33 and primer 52 are sealed against external pressure such as might occur by a gassing of the ignition mixture 45 over long periods of storage or as the result of a puncture of the end closure or seal hereinafter described.

The ignition mixture 45 is ignited by an igniter charge 56 which is a composition adapted to be ignited readily by the flame of the primer 52 and to burn with the production of as little gaseous products as possible. In the present embodiment, the igniter charge comprises a mixture of 33% lead dioxide, 14% calcium silicide and a binder such as powdered shellac. The igniter charge is packed relatively loosely in the end of the igniter against the end of the ignition mixture 45. As shown in Fig. 1, the igniter mixture surrounds the ignition tube sealing cap 54 but is separated therefrom by an annular space 57.

The igniter mixture 56 and ignition mixture 45 specified above provide a combination which, when fired, is hot enough to burn to completion even though completely immersed in water but will not detonate. These ignition mixtures are also characterized by a long burning time, stability under severe storage conditions and complete reliability when set off by the primer flame.

The igniter is closed by a frangible end seal, the function of which is to resist, without leaking, external pressure of the order of two hundred pounds per square inch which may develop in the

torpedo combustion chamber prior to the operation of the igniter. Moreover, it is desirable that the end closure or seal break up into relatively small particles or even melt when the igniter is fired and at a definite pressure. An end seal having these characteristics is shown in the drawing and comprises a disk 58 of zinc substantially 0.010 inch thick and provided with a concentric coined annulus 59 substantially 0.004 inch thick which forms a concentric central disk 58'. The end seal is seated on an annular shoulder 60 formed on the inside wall 11 of the igniter and is preferably separated from the igniter charge 56 by a paper disk 62, both sides of the latter being shellacked. The zinc end seal 58 is held securely in place both by roll crimping the end of the extension 11 of the igniter as shown at 63 and by applying solder 64 to the joint. Inasmuch as it is usually necessary to tin the end seal and the crimp metal, the latter is tinned before crimping. By fastening the end seal in the end of the igniter in this manner, it is held firmly in place and will not be blown out prematurely either by the primer explosion or during the initial burning of the igniter charge. Moreover, it is impossible for the seal to bulge or creep, and hence to leak due to internal pressure caused by a gassing of the ignition charges.

In operation, the igniter is secured in an aperture in the wall of the combustion pot of a torpedo by its threaded portion 12, the upper end of the igniter extending outside of the pot. The threaded nipple 18 of the plug 15 is connected by a suitable fitting to an air line which supplies compressed air to the igniter. When the starting lever of the torpedo is tripped, which occurs when the torpedo is released, compressed air is automatically admitted to the combustion pot. In the brief interval between the time the torpedo is released and the time it strikes the water (which may be as long as ten seconds) air pressure builds up in the combustion pot, thereby subjecting the end seal of the igniter to considerable pressure. However, by providing the improved end seal and sealing cap for the ignition tube as described above, the firing mechanism of the igniter is protected from this pressure. As soon as the torpedo hits the water, a suitable trip is actuated which admits air pressure to the igniter through the plug 15 to the top of the diaphragm 20. The latter tends to be displaced downwardly from its normal unstressed position by the pressure exerted thereon. This pressure slowly builds up on the thrust plate 36 of the firing pin 33 until the force exerted on the shear pin 34 approximates one hundred to one hundred and twenty five pounds per square inch whereupon the pin shears abruptly. Since the diaphragm is designed for and is capable of relatively large movement, the firing pin, and more particularly its nose 38, is driven down violently and without restraint onto the primer 52, all of the energy of the firing pin being concentrated on a single primer. The ignition of the primer is thus positively insured. The relative simplicity and symmetry of design of the firing mechanism precludes any liability of failure due to the severe shock sustained on impact of the torpedo with the water. The hot flame from the primer passes down through the relatively short passages 49 and 53, burns through the exposed wall of the zinc sealing cap 54 and blasts a cavity in the igniter composition 56 thereby creating broken up particles readily amenable to ignition. Moreover, since the primer is located in the lower end of the ignition tube, the primer flame is relatively short and contacts the ignition

mixture 56 while the flame is still extremely hot which circumstance further insures positive ignition of the adjacent igniter composition. The latter thereupon ignites the ignition mixture 45 and the combined pressure and heat of the burning igniter and ignition mixtures breaks out the center 58' of the sealing disk 58. In the embodiment shown, the thin annulus 59 of the sealing disk is designed to rupture and free the central disk 58' at a pressure of approximately two hundred and fifty pounds per square inch. This expedient introduces a time delay which insures positive burning of the igniter and ignition charges before the sealing disk has been completely blown out and the powder charges subjected to the high pressure of the combustion pot. Moreover, by allowing the small central disk 58' of the seal to blow out before the entire seal is blown off of the end of the igniter, the igniter charge 56 is effectively retained in the igniter casing for complete combustion. After the sealing disk has been ruptured, the flame of the burning powders bursts into the combustion pot and ignites the combustion charge therein. This flame will continue to burn uninterruptedly for a period of substantially one minute, and hence insure continuance of the combustion necessary to the successful propulsion of the torpedo.

What is claimed is:

1. An igniter comprising an elongated body constructed and arranged to define two oppositely extending tubular chambers separated by an intermediate partition; a generally axially arranged ignition tube communicating between a first one of said chambers and the remote end of the second of said chambers; a percussion primer seated in the end of said ignition tube remote from said first chamber; a firing pin in said ignition tube in alignment with said primer; shearable means releasably holding said firing pin in spaced relation to said primer; pressure responsive means in said first chamber in operative engagement with the end of said firing pin; explosion removable seal means separating the primer containing end of said ignition tube from the second of said chambers; a pyrotechnic charge loaded in said second chamber surrounding said ignition tube in position to receive a primer flame when said seal means has been blown from said ignition tube; and a heat removable closure for the end of said second chamber.

2. An igniter comprising an elongated tubular casing separated between its ends by a partition to define a first chamber and a second chamber; an ignition tube secured to said partition and extending axially substantially through the second one of said chambers; a percussion primer seated in said ignition tube at a point remote from said partition; flash passages communicating between said primer and the exterior of said ignition tube; seal means removable by the primer explosion closing said flash passages; an igniter charge in said second chamber in surrounding relation to the igniter tube; an ignition mixture in contact with said igniter charge surrounding the seal means over said flash passages; an end seal releasably closing the end of the second chamber of said casing over said ignition mixture; a firing pin slidably mounted in said ignition tube in alignment with said primer; shearable means restraining said firing pin against movement toward said primer; and pressure responsive means in operative engagement with the end of said firing pin, said pressure responsive means being mounted

in the first chamber of said casing and isolated by said seal means from direct communication with said second chamber.

JOHN P. CATLIN.

REFERENCES CITED

The following references are of record in the file of this patent:

UNITED STATES PATENTS

Number	Name	Date
342,423	Bloem	May 25, 1886
1,163,937	Macomber	Dec. 14, 1915
1,376,908	Woodberry	May 3, 1921
1,474,548	Pape	Nov. 20, 1923
1,514,743	Taylor	Nov. 11, 1924
1,521,091	Guillemet	Dec. 30, 1924
1,648,603	Barker	Nov. 8, 1927
2,423,837	Martin	July 15, 1927
2,349,980	Moore	May 30, 1944

FOREIGN PATENTS

Number	Country	Date
300,634	Germany	June 3, 1919