Dec. 20, 1966 H. BRUECKMANN 3,293,646

FERRITE-FILLED, COAXIAL-STUB, ANTENNA TUNER

Filed July 8, 1965

FIG. 1

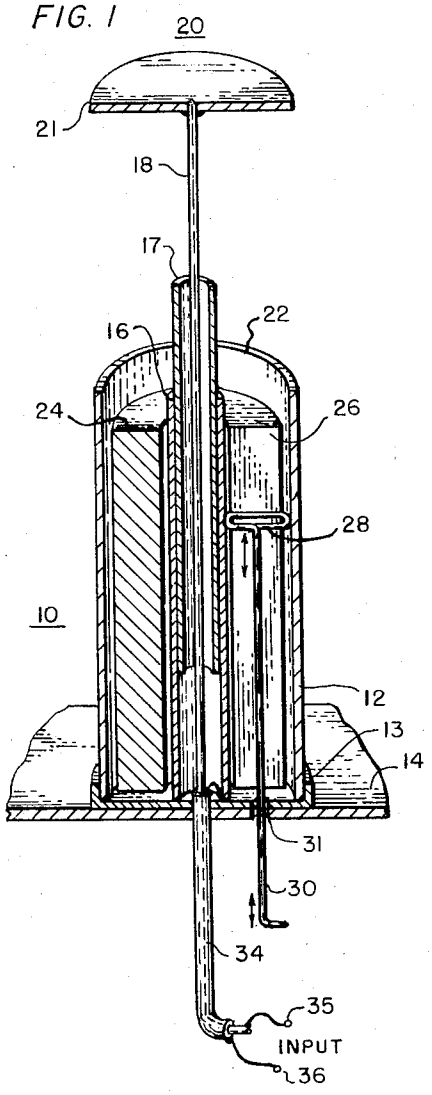

FIG. 2

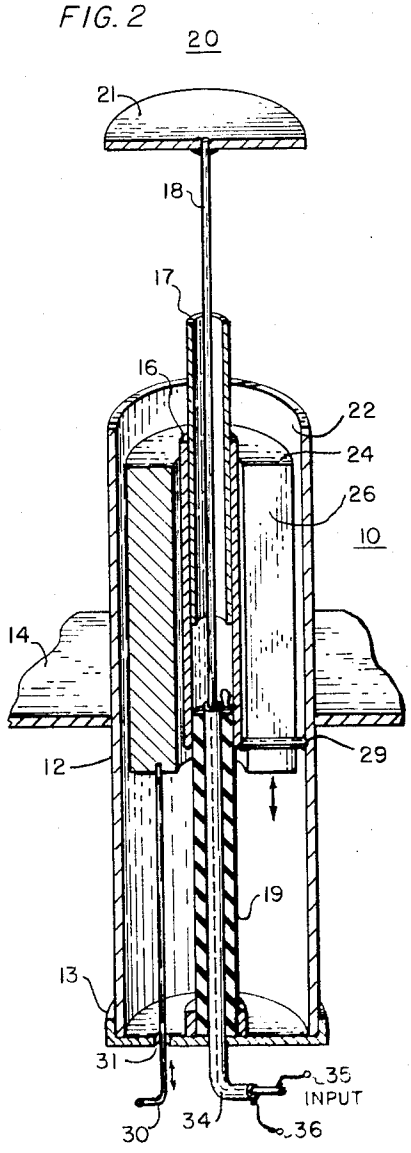

INVENTOR,
HELMUT BRUECKMANN.

BY Harry M. Saragovitz, Edward J. Kelly, Herbert Berl & Julian C. Keppler ATTORNEYS

United States Patent Office

3,293,646

Patented Dec. 20, 1966

3,293,646

FERRITE-FILLED, COAXIAL-STUB, ANTENNA TUNER

Helmut Brueckmann, Little Silver, N.J., assignor to the United States of America as represented by the Secretary of the Army

Filed July 8, 1965, Ser. No. 470,639
7 Claims. (Cl. 343—750)

The invention described herein may be manufactured and used by or for the Government for governmental purposes without the payment of any royalty thereon.

This invention relates to antennas, and particularly to monopole antennas. More particularly, this invention relates to antennas having an inductive loading system for making the antenna resonant at a lower frequency than would be possible without it.

Inductive loading devices, such as coils, with and without ferrite cores, are a well-known means for making a monopole antenna operable at a shorter length than would otherwise be possible. However, these antennas have a limited tuning range or are even fixed in frequency, especially if the loading device is built into the antenna as an integral part of it and positioned above the base. A different frequency would require another antenna, or modification of an existing one.

It is therefore an object of this invention to provide an improved antenna, that is conveniently and continuously adjustable in resonant frequency over a wide range of frequencies.

It is a further object of this invention to provide an improved loading device for a monopole antenna.

It is a further object of this invention to provide a simple and effective means to vary the inductive load of an antenna in order to tune the antenna to the frequency of a transmitter, such means being an integral part of the antenna, and, more specifically, being positioned above the base.

These and other objects of this invention are accomplished by connecting a shorted coaxial line stub to the base of a vertical monopole antenna that is excited against a ground plane. The center element of the coaxial line stub is the outer shielding sleeve of a coaxial feed-line and the center conductor of this, coaxial, feed-line connects to, or extends beyond its outer shielding sleeve to become, the upper element of the monopole, which may terminate in a well-known capacitive load. The outer shielding sleeve of the coaxial feed-line may extend above the open end of the stub to provide a more advantageous feed-point for the upper element.

The coaxial line stub is provided with a slotted ferrite slug, a shorting bar positioned within the slot, and means for moving the shorting bar with respect to the open end of the line stub and the ferrite slug, or means for moving the ferrite slug with respect to the open end of the line stub and the shorting bar.

This invention will be better understood and other objects of this invention will become apparent from the following specification and the drawings, of which:

FIGS. 1 and 2 show cross-sections of two species of this invention.

Referring now more particularly to FIG. 1, a coaxial line stub **10** has an outer, cylindrical conductor **12**, and a base plate **13** mounted on a ground plane **14**. The coaxial line stub also has an inner conductor **16** which, in this case, is another, cylindrical, conductor that also serves as the outer conductor of a coaxial feed-line whose center conductor **18** extends to the upper portion **20** of the antenna.

The outer conductor **16** of the coaxial feed-line is shown extended beyond the open end **22** of the coaxial stub or it may have an extension, such as the cylindrical conductor **17**, where this is advantageous. The position of this feed-point controls the resistive component of the impedance of the antenna.

The coaxial line stub has a ferrite core **24** that fills the space between the inner and outer cylindrical conductors. This core has an axial slot **26** to allow axial motion of a sliding, shorting bar **28**.

The sliding, shorting bar **28** is moved by a rod **30** which extends through a hole **31** in the ground plane **14**.

A standard coaxial line **34** connects the input terminals **35** and **36** to the proper elements of the coaxial feed-line.

Referring now to FIG. 2, the coaxial line stub **10** is again seen. This time with its outer, cylindrical conductor **12** extending through the ground plate **14**, to terminate in the base plate **13**. The inner, cylindrical conductor **16** of the coaxial line stub and its extension **17** extend through the line stub and beyond its open end **22** to the effective feed-point of the antenna.

The inner, cylindrical conductor of the coaxial line stub is, again, the outer conductor of the coaxial feed-line whose center conductor **18** also extends to the upper portion of the antenna.

The coaxial line stub has the ferrite core **24** between the two cylindrical conducting shells, but in this species, the core only occupies about half of the coaxial line stub and is free to move axially, through the stub. This motion is controlled by means of the mechanical plunger **30** extending, movably, through the hole **31** in the base plate **13**.

The shorting bar, **28**, between the cylindrical conductors **12** and **16** is fixed in this species, and the movement of the ferrite slug, past the shorting bar, within the line stub takes the place of the movement of the shorting bar with respect to the ferrite slug and the line stub in the species of FIG. 1. Thus, a wiping contact is avoided which is advantageous from the reliability viewpoint.

The standard, coaxial line **34** again connects the input terminals **35** and **36** to the proper elements of the coaxial feed-line.

In operation, the coaxial line stub serves as a loading inductor for the vertical, monopole antenna in a well-known manner, however, instead of being effective at only one frequency, the effective loading inductance can be varied by varying the effective length of the coaxial line stub or the effective length of the ferrite slug. Moreover, the loading inductor is effectively positioned at a point between tip and base. This point can be chosen to coincide with the optimum position taught by Harrison in a recent publication in IEEE Transactions PGAP, July 1963, entitled "Monopoles With Inductive Loading," pp. 394–400.

In FIG. 1 the effective length of the coaxial line stub and the effective length of the ferrite slug are varied simultaneously by varying the position of the shorting bar with respect to the open end of the stub and to the fixed ferrite slug.

In FIG. 2 the effective length of the coaxial line stub is varied by moving the ferrite slug with respect to the fixed shorting bar.

In both cases, the effect of the stub and the slug is to reduce the wavelength of the standing wave on the surface of the conductors exposed to free space. As the effective length of the slug, and stub, is increased, the resonant frequency of the antenna is lowered. This permits reducing the size of the antenna for a given frequency and tuning it over a wide range of frequencies.

In both cases the inner conductor of the stub may extend above the open end of the stub to the effective feed-point of the antenna, and the inner conductor of the coaxial line will extend beyond the feed-point as far as desired for optimum radiation.

The upper end of the antenna **20** may be terminated in

a capacitive top load **21** of any known type. Other known means for reducing the resonant frequency of an antenna of given height may be also incorporated.

While both of the figures show the motion of the respective elements as being accomplished by a mechanical, sliding rod extending through the base plate of the line stub, it is obvious that the mechanical motion necessary to move the sliding, shorting bar or the ferrite slug, as the case might be, can be accomplished by other mechanical means. Such mechanisms could be actuated from inside or from outside of the line stub and the mechanical motion could be made more precise by suitable mechanical gearing.

As an alternative, the slot in the ferrite slug could be helically cut so that the motion of the shorting bar, or of the slug, could be controlled by rotating the slug or some portion of the line stub. In addition, any such mechanism could be adapted for remote control by means of a suitable servo system. An obvious further step would be to make the system adjust itself automatically to a change in the frequency of operation or in the electrical property of the environment.

The sliding-contact, shorting bar of FIG. 1 provides the minimum inductance, and the larger variation of inductance from maximum to minimum, since it shorts out the stub as well as the ferrite-loaded portions of the stub. However, this species relies on mechanically-sliding, electrical contacts that are theoretically excellent but, in practice, are highly susceptible to problems of mechanical friction and alignment, as well as problems of electrical contact and resistance that will increase with corrosion and input power.

The fixed shorting bar of the sliding, ferrite slug provides more positive electrical contact, but it requires almost twice the space to obtain as great a ratio of minimum to maximum as the species of FIG. 1.

Another obviously possible modification in the case of the species of FIG. 1 is the application of a controlled magnetic bias to the ferrite slug. A magnetic bias changes the effective permeability of the ferrite for an RF field and, thus, the effective electrical length of the stub, in a well-known and well-defined manner. This effect which is related to the shape of the hysteresis loop permits varying the effective stub length by varying the magnetic bias while keeping the movable shorting bar in a given position, or removing it, as well as the slot, completely.

The most effective orientation of the magnetic bias field is at right angles to the stub axis and, if the slot is retained, parallel to the slot. It can be obtained by placing an electromagnet suitably oriented outside the outer conductor of the stub and by varying the current in its winding. Such an electromagnet would be similar in appearance to the well-known pair of deflection coils for magnetically deflecting the electron beam of a television picture tube.

The efficiency of the antenna will not be affected by the presence of this electromagnet because it is decoupled from the RF field, specifically since the outer conductor of the stub is essentially on RF ground potential. In addition, the electromagnet can easily be shielded against RF fields.

Attractive as the modification might appear at first glance, the magnetic bias is unfortunately associated with a deterioration in Q. This disadvantage might, however, be outweighed by the advantage of easy control, depending on the application.

While the embodiments shown and described in this disclosure deal with center-fed monopole antennas, for simplicity and clarity, it will be obvious to those skilled

in the art that these teachings are applicable to other variations of antennas, such as the dipole equivalents of the monopoles used here. In the case of dipoles, symmetrical tuning slugs would presumably be provided, back-to-back, with dual, mechanically-linked, tuning mechanisms.

The effectiveness of this type of antenna tuning device will be limited by the losses of the ferrite or ceramic slug at very high frequencies. However, it is obvious that the potential frequency range of this device will increase as the state of the art of ferrites and ceramics improves.

What is claimed is:

1. A variable, inductive, antenna loading device comprising a center conductor; a coaxial conductor extending along a portion of said center conductors; a coaxial tuning stub extending along a portion of said coaxial conductor; a slotted ferrite slug positioned between said coaxial conductor and said coaxial tuning stub; a shorting bar, positioned within the slot in said ferrite slug, making electrical contact between said coaxial conductor and said coaxial tuning stub; means for varying the relative positions of said ferrite slug and said shorting bar; and a coaxial feed-line connected between said center conductor and said coaxial conductor.

2. In a device as in claim **1**, said shorting bar being movable with respect to said ferrite slug and said tuning stub.

3. A device as in claim **1** having a rod extending along said slot in said ferrite slug, said rod being attached to said shorting bar; and means for moving said rod in an axial direction with respect to said slug to vary the position of said shorting bar with respect to the ferrite slug and to the tuning stub.

4. A variable, inductive, antenna loading device comprising, a center conductor projecting from a neutral plane; a coaxial, shielding conductor extending along a portion of said center conductor; a coaxial, tuning stub extending along a portion of said coaxial shielding conductor; a slotted, ferrite slug positioned between said tuning stub and said coaxial shielding conductor; a shorting bar, positioned within the slot in said ferrite slug, between said tuning stub and said coaxial shielding conductor; means for varying the relative positions of said ferrite slug and said shorting bar, along said slot in said ferrite slug; and a coaxial feed line having a center conductor connected to the center conductor projecting from said neutral plane and a shield connected to said coaxial shielding conductor.

5. In a device as in claim **4**, said ferrite slug being movable with respect to said shorting bar and said tuning stub.

6. In a device as in claim **4**, said tuning stub being substantially twice as long as said ferrite slug; said shorting bar being permanently connected at the middle of said tuning stub; and said ferrite slug being free to move from one end of said tuning stub to the other end with said slot passing along said shorting bar from one end of said ferrite slug to the other end.

7. In a device as in claim **4**, for monopole antenna loading; said neutral plane being a ground plane; said coaxial tuning stub extending through said ground plane; and said shorting bar being positioned substantially in said ground plane.

No references cited.

ELI LIEBERMAN, *Primary Examiner.*

R. F. HUNT, *Assistant Examiner.*