April 23, 1957 A. F. LICKTEIG 2,789,851

WINDOW LATCH

Filed June 10, 1954 2 Sheets-Sheet 1

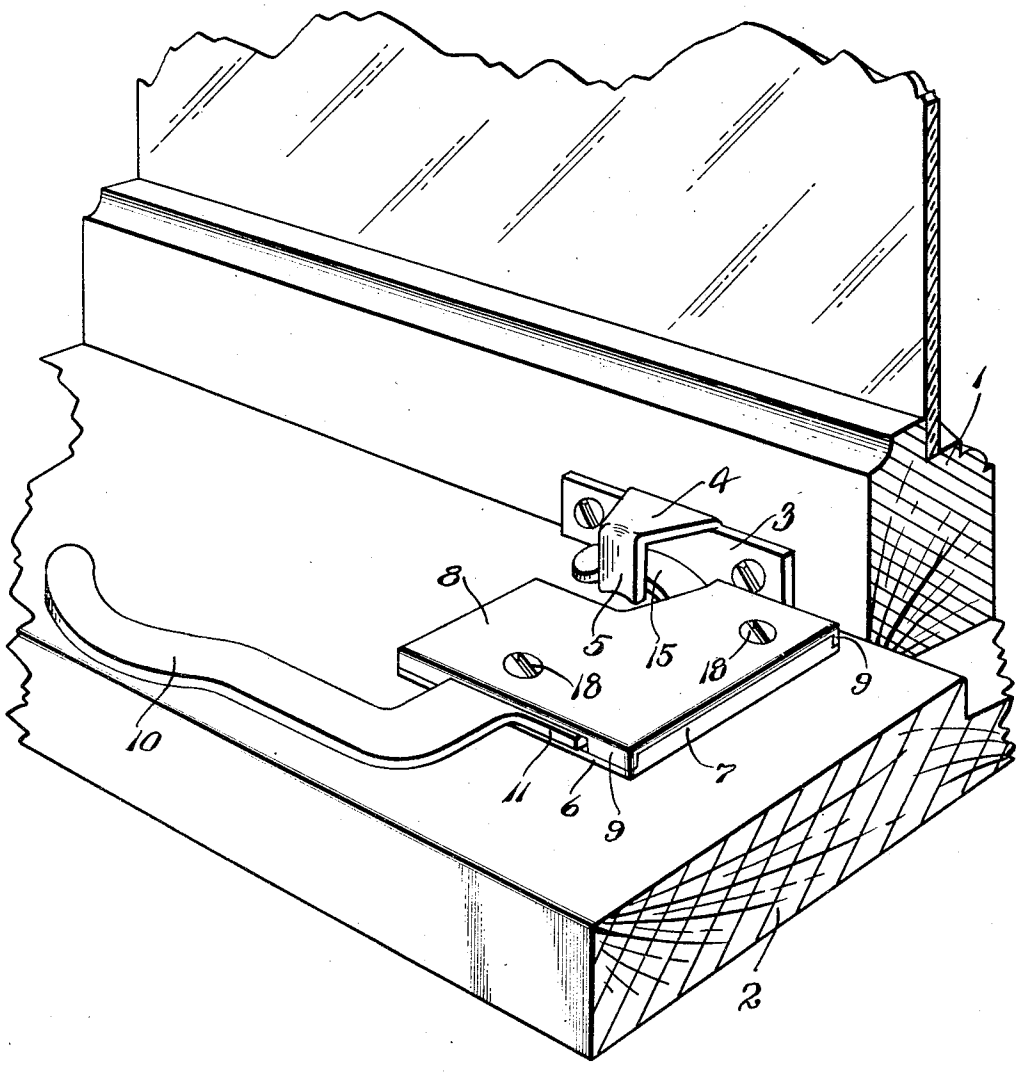


FIG. 1

INVENTOR.
ALBERT F. LICKTEIG
BY
Frank E. Liverance Jr.
ATTORNEY

April 23, 1957 A. F. LICKTEIG 2,789,851

WINDOW LATCH

Filed June 10, 1954 2 Sheets-Sheet 2

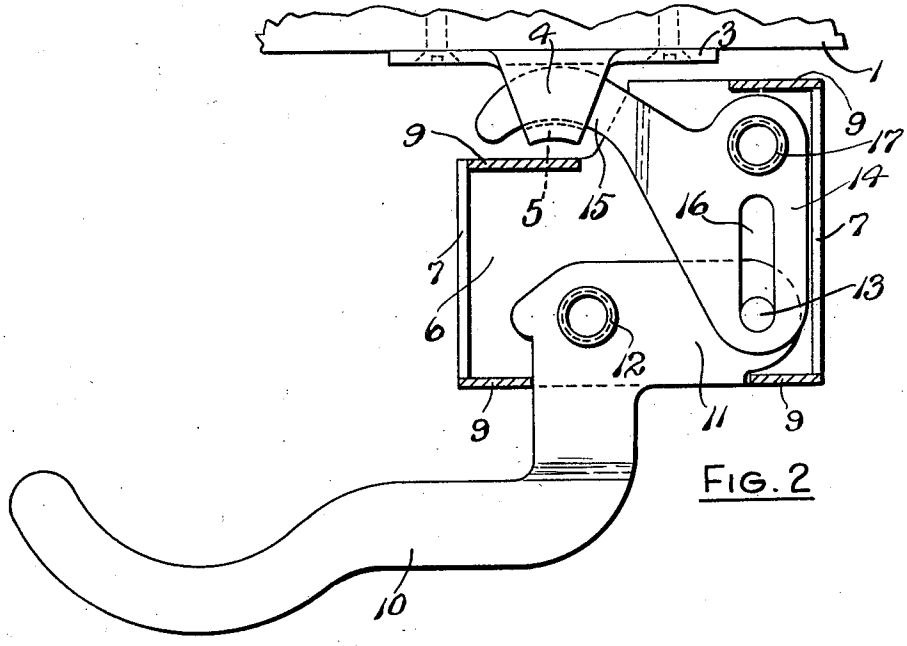


FIG. 2

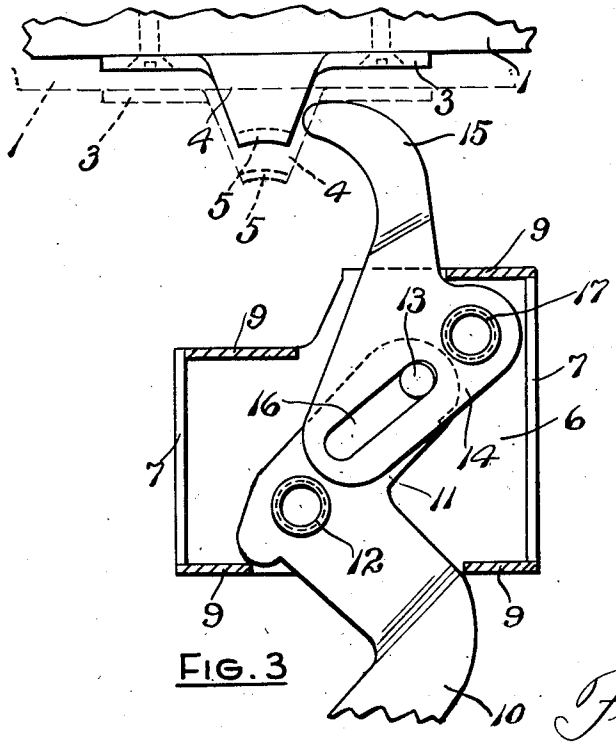


FIG. 3

INVENTOR.
ALBERT F. LICKTEIG
BY
Frank E. Liverance Jr.
ATTORNEY

United States Patent Office 2,789,851 Patented Apr. 23, 1957



2,789,851

# WINDOW LATCH

Albert F. Lickteig, Grand Rapids, Mich., assignor, by mesne assignments, to Durable Products Company, Grand Rapids, Mich., a corporation of Michigan

Application June 10, 1954, Serial No. 435,761

1 Claim. (Cl. 292—98)

This invention relates to a locking latch which is particularly adapted for use in releasably securing an awning window in closed position. Such awning window or window sash is mounted at an opening in a window frame, at or adjacent its upper edges for pivotal movement about a horizontal axis, being swingable outwardly at its lower portion in opening and inwardly upon closing.

It is an object and purpose of the present invention to provide a particularly novel, simple, sturdy and economically constructed locking latch for securely, yet releasably holding an awning window sash or the like in closed position against accidental or other inadvertent opening, and which can be opened by releasing the latch to disconnect it from a keeper permanently secured at the lower portion and at the inner side of the awning window sash. The locking latch also is of particular usefulness in engaging with the keeper on the window sash, even though the window is not completely or almost completely closed, but with the lower edge portions of the window sash outwardly an appreciable distance from the window sill against which it is to be drawn in closed position. The latch upon manual operation will engage with the keeper and draw the sash to closed position.

An understanding of the invention may be had from the following description taken in connection with the accompanying drawings, in which,

Fig. 1 is a perspective view of the latch and keeper, the latch being shown secured at the upper side of the sill of a window frame, and the keeper at the inner side and near the lower edge of the awning window sash.

Fig. 2 is a horizontal section through the latch housing between its upper and lower sides, and with the latch shown in plan in operative position engaged with the keeper, and

Fig. 3 is a like view to that shown in Fig. 2, the latch being at its released position in full lines, and indicating the keeper engagement with the latch on closing in dash lines.

Like reference characters refer to like parts in the different figures of the drawings.

At the inner side and near the lower edge of the lower horizontal rail 1 of an awning window sash, the keeper for the locking latch which I have produced is securely fixed. Such rail when the window sash is in closed position comes against a shoulder at the outer edge portions of the horizontal sill 2 of the window frame with which the sash is associated, the locking latch of my invention being secured at the upper side of the sill.

The keeper comprises a vertical plate 3 secured to the rail 1, preferably by screws. From the upper edge and between the ends of the plate 3 an integral section 4 is bent and extends inwardly in a generally horizontal direction for a distance and is then bent downwardly into the immediate keeper engaging lip 5 which, in horizontal cross section, is preferably in the arc of a circle.

The latch mechanism used with the keeper includes a housing of flat metal having a lower horizontal plate 6 from opposite ends of which short vertical flanges 7 are turned upwardly.



The housing is completed by an upper horizontal plate 8 parallel to and spaced from the lower plate 6 and having at inner and outer edges downturned short flanges 9. At the inner side of the latch housing, the flanges 9 are of short length, being removed at an intermediate portion in the length of the plate 8, so as to leave a slot through which the operating handle for the latch, hereafter described, passes. Similarly, the intermediate portion of the upper flanges are removed leaving a slot for the passage of the element of the latch which engages with the keeper. The plates 8 are of generally rectangular form except one corner portion is cut away as shown.

The latch handle 10 has integrally connected thereto, at its inner end portion, an arm 11 which when the latch is closed, as in Figs. 1 and 2, has its longitudinal center line passing slightly over a line parallel to the inner side of the latch housing. The handle 10 extends inwardly a short distance and is then extended laterally as shown. It is made of flat metal and offset as shown for the purpose of reversibility of the latch structure. It is pivotally mounted, using a hollow bushing 12, the ends of which are enlarged outwardly so as to securely connect the bushing with the housing plates 6 and 8. Such pivot bushing passes through the handle structure at the juncture of the handle 10 with the arm 11 integral therewith. Near the free end of the arm 11 a short pin 13 is secured extending upwardly therefrom and having its center and the center of the pivot bushing 12 in a line over center a short distance from a line parallel to the length of arm 11.

The latch is completed by an intermediate keeper engaging member 14 which, together with a keeper engaging finger 15 integral therewith is also made from a plate of metal likewise offset for reversibility lying over the arm 11. The length of the member 14, when the latch is in closed position (Fig. 2) is substantially at right angles to the arm 11. A slot 16 closed at both ends is cut in the part 14 parallel to the length thereof. Such keeper engaging member is pivotally mounted in the same manner as the handle by means of a hollow bushing 17 which passes through the end of the part 14 of such keeper engaging member, adjacent its inner end. The pin 13 is located in the slot 16. The latch may be advantageously secured at the upper side of the sill 2 by means of screws 18 passing downwardly through the hollow pivot bushings 12 and 17.

When the latch is in closed position, as in Fig. 2, by grasping the handle 10 and swinging it about its pivot bushing 12 inwardly in a counter-clockwise direction, the pin 13 is swung in the arc of a circle in a similar direction, bearing against a side of the slot 16, and causing the keeper engaging member to turn in a clockwise direction thereby moving the finger 15 out of engagement with the part 5 of the keeper and forcing the sash outwardly to break paint or ice seals to the position shown in Fig. 3. The pin 13 moves lengthwise of the slot 16 riding against the inner edge thereof. When thus operated the window sash is freed from the latch.

In closing the window and locking it in closed position, after the sash has been moved sufficiently close to the sill 2 the handle 10 is operated in the opposite direction, that is, in a clockwise direction, whereupon pin 13 engages against the opposite or outer edge of the slot 16 swinging the keeper engaging member and finger 15 to engage with the keeper part 5, riding thereagainst and pulling the keeper and attached sash inwardly to closed position. Also the latch will be automatically operated to closed position on closing the window upon plate 3

striking against the finger **15**, as shown in dash lines in Fig. 3, the momentum of the sash supplying force to turn the finger **15** counter-clockwise about the pivotal axis of the bushing **17** so that the latch will automatically be moved to the closed position as in Fig. 2. If the latch parts with the window open should be in the closed position, as in Fig. 2, and the keeper part **5** comes against the outer edge of the finger **15** it is merely necessary to swing the lever **10** counter-clockwise until the finger **15** disengages from the keeper and then immediately swing it back in the opposite direction to operatively engage with the keeper and hold the sash in closed position.

The latch is of exceptionally durable and sturdy structure. The parts are few, easily fabricated and assembled so that economy of manufacture is obtained. When the latch is in closed position, as in Fig. 2, an outward pull or force applied to the window sash **1** will have a tendency to swing the keeper engaging member in a clockwise direction pushing against the pin **13** in the direction of the pivot bushing **12**. However the force exerted by the pin will be slightly past direct alignment with the axis of the bushing **12**, and there will be no component of the pin force in a direction at right angles thereto to cause the handle **10** to swing to or toward open position. This over dead center arrangement of the pin **13** with reference to the pivot bushing **12** when the latch is in closed position provides a positive lock against the sash being opened by an outward force applied directly to the sash.

The invention is defined in the appended claims and is to be considered comprehensive of all forms of structure coming within their scope.



I claim:

In a latch structure, a flat substantially rectangular housing comprising spaced fixedly connected plate-like housing members having registering notch-like recesses in the outer edges thereof providing a keeper and latch bolt receiving recess, said housing having slot-like openings in its inner and outer sides, a first pivot disposed adjacent the inner side of said housing, a second pivot disposed adjacent the outer corner of the said housing in spaced relation to said keeper recess thereof, a handle disposed through said inner opening and pivotally mounted on said first pivot, and a keeper engaging member pivotally mounted on said second pivot, said lever and keeper engaging member having coengaging parts whereby said keeper engaging member is actuated by said lever, said keeper engaging member having a keeper engaging bolt element which projects from said outer casing opening when in projected position and is positioned within said keeper receiving recess when in locking position.

**References Cited** in the file of this patent

UNITED STATES PATENTS

| | | |
|---|---|---|
| 559,663 | Bennett | May 5, 1896 |
| 1,677,825 | Hilty | July 17, 1928 |
| 2,151,219 | Madsen | Mar. 21, 1939 |
| 2,716,262 | Oswald | Aug. 30, 1955 |

FOREIGN PATENTS

| | | |
|---|---|---|
| 136,195 | Austria | Jan. 10, 1934 |