E. J. NOLAN.

FUEL OIL BURNER.

APPLICATION FILED NOV. 10, 1914.

1,158,541.

Patented Nov. 2, 1915.

2 SHEETS—SHEET 1.

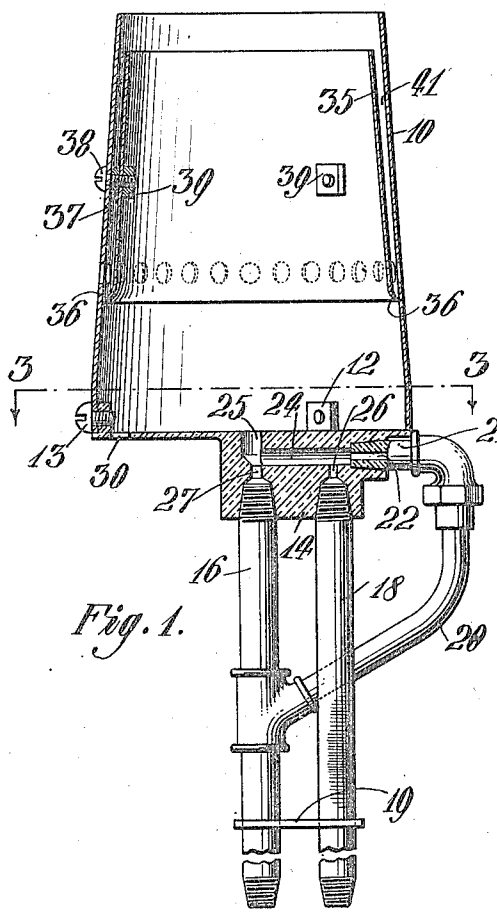

Fig. 1.

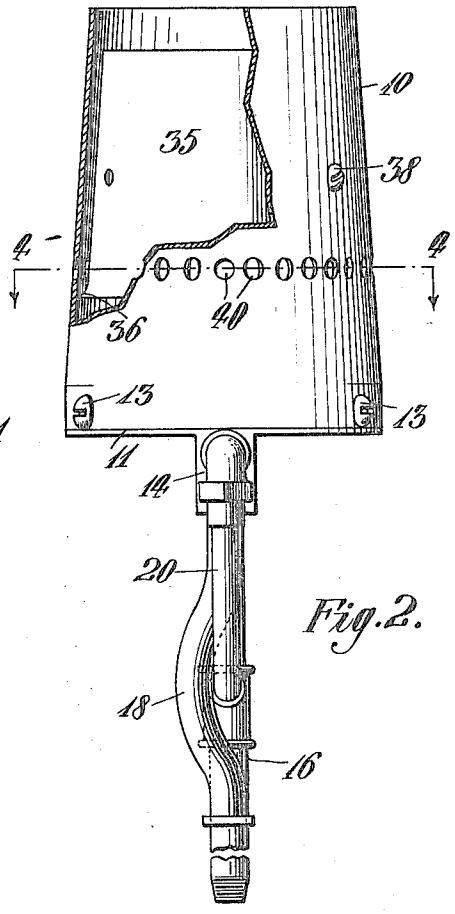

Fig. 2.

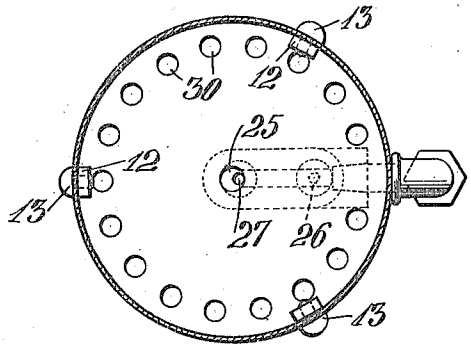

Fig. 3

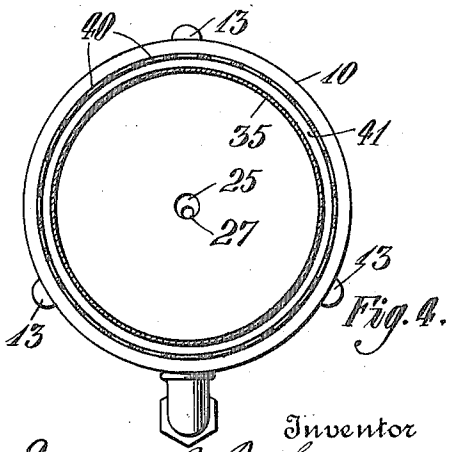

Fig. 4.

Witnesses:
Fred. Roeger.
Hans C. Boos

Inventor
Edward J. Nolan

E. J. NOLAN.

FUEL OIL BURNER.

APPLICATION FILED NOV. 10, 1914.

1,158,541.

Patented Nov. 2, 1915.

2 SHEETS—SHEET 2.

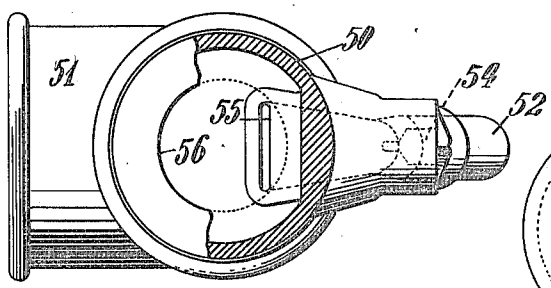

Fig. 6

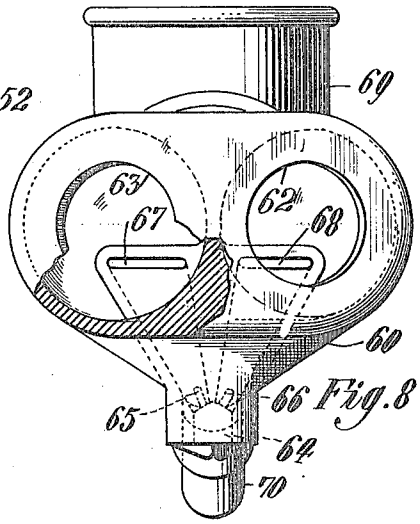

Fig. 8

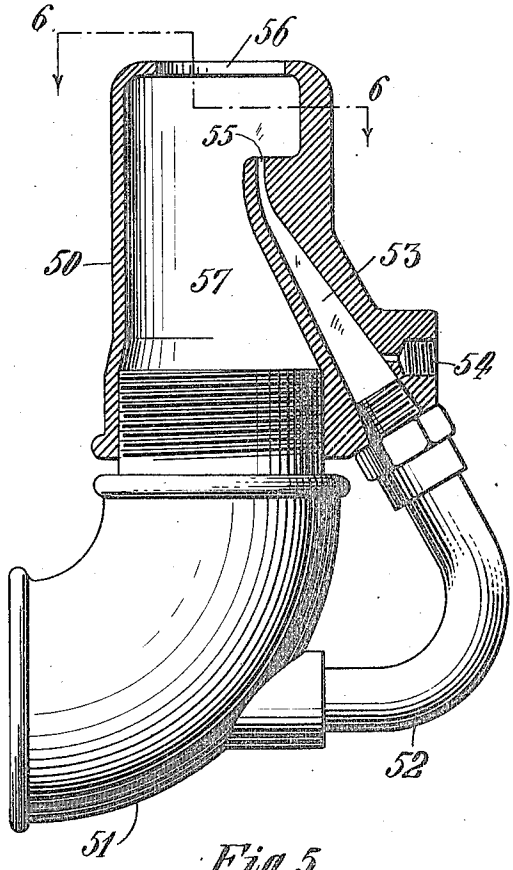

Fig. 5.

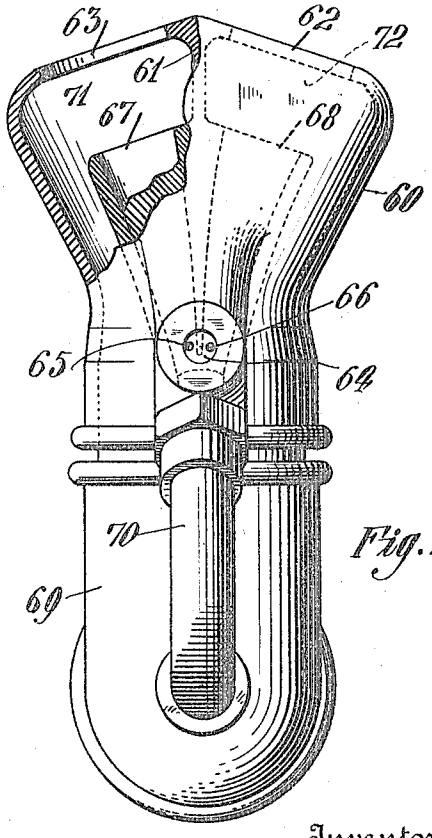

Fig. 7.

Witnesses:
Fred. Roeger
Hans C. Boos

Inventor
Edward J. Nolan

UNITED STATES PATENT OFFICE.

EDWARD J. NOLAN, OF BROOKLYN, NEW YORK.

FUEL-OIL BURNER.

1,158,541. Specification of Letters Patent. Patented Nov. 2, 1915.

Application filed November 10, 1914. Serial No. 871,245.

To all whom it may concern:

Be it known that I, EDWARD J. NOLAN, a citizen of the United States, and a resident of Brooklyn, in the county of Kings and State of New York, have invented certain new and useful Improvements in Fuel-Oil Burners, of which the following is a specification.

This invention relates to improvements in oil burners and particularly to that type adapted for use in burning crude, heavy oils.

The objects of the invention are first, to provide burners in which the oil is thoroughly atomized before ignition and so commingled with steam or air as to form a gaseous spray mixture readily combustible with a steady flame.

A second object is to provide an improved form of portable burner in which the combustion chamber is maintained in a relatively cool condition up to the point of flame discharge. And finally, to provide burners economical alike in action and construction, that are capable of long and continuous service and which are readily operated.

These and other similar objects are attained by the novel construction and combination of parts hereinafter described and shown in the accompanying drawings, forming part of this specification, and in which:

Figure 1 is a partial section and side elevation of a high pressure burner made in accordance with the invention. Fig. 2 is a plan view of the same, parts being broken away showing the interior. Fig. 3 is a cross sectional view taken on line 3—3 of Fig. 1. Fig. 4 is a similar sectional view taken on line 4—4 of Fig. 2. Fig. 5 is a partial side elevation and section view, showing a modified form of single low pressure burner without the combustion chamber. Fig. 6 is a partial end view and section taken on line 6—6 of Fig. 5. Fig. 7 is a plan view showing a modification embracing a double burner, and, Fig. 8 is a front view of the same.

The portable burner comprises a circular combustion chamber, comprising a casing or shell 10 preferably made of sheet metal, conical in shape fitted to a head 11 that is provided with lugs 12 which extend into the casing to receive the retaining screws 13. On the outside of the head 11 is a boss 14 tapped to receive an air pressure pipe 16, slightly above the axial center of the combustion chamber, so as to obtain control of the flame. This boss part may be formed integrally with the head or made separately and attached by bolts or rivets as preferred. A continuation of the boss is also tapped for the entry of the oil pipe 18; both pipes are engaged by suitable connections 19 at various points along their length and furnished with valves (not shown) to control the passages therethrough.

On the pipe 16 is a T, the branch of which carries a by-pass pipe 20 eventually directed downward and terminating in a specially constructed nipple, threaded into the top of the boss 14, at an angle to the pipes 16 and 18. Within the nipple 21 is a restricted central inlet opening 22 ranging with the transverse passage 24 formed in the boss 14, the passage leading to the opening 25 formed in the boss 14, and extending through the head 11 to the interior of the combustion chamber central with its axis. A small opening 26 leads from the pipe 18 into the passage or first mixing chamber 24 through which oil may enter and a similar but larger opening 27 leads from the pressure or blast pipe 16 into the opening 25, but offset therefrom, so that an incoming current is directed sharply across the end of the passage 24.

It is to be understood that the size of the openings 22 and 27 from the blast pipes is governed by the amount of pressure furnished by the blast and that the proper working depends on their being correctly proportioned. Another important feature is the position of the opening 25 relative to the main blast inlet 27, for if the oil be turned in before the blast, any excess would enter the opening 25 and from there pass into the combustion chamber rather than back up into the blast pipe. When oil does accumulate in the blast pipe, as is the case with all other burners using a mixing chamber, it is ejected in a stream causing a flame of undesirable size, dangerous to those close by. The burner head is also formed with perforations 30 for the free admission of atmospheric air, the perforations being spaced nearly equal in a circle within but near the confines of the combustion chamber.

An inner shell 35 having a curved contacting edge 36 is set within the main casing and is further supported and maintained by distance pieces in the form of curved washers 37, the same being held in position by screws 38 engaging with internal nuts 39.

This arrangement provides for an annular open space between the walls of the inner shell and outer casing to which atmospheric air may enter through openings 40 made in the outer casing immediately beyond the curved edge 36. This inner casing may extend from the head but on account of the extra weight, is preferably positioned midway of the outer shell; the extreme outer end terminates at a short distance from the end of the outer shell, the arrangement being substantially so that a line from the center of the opening 25 will touch the outer edges of the lining and outer shell. It may also be remarked that the length of the opening 25 largely controls the spread of the flame and must be properly proportioned with the diameters and length of the burner casings.

It will be understood that the size, shape and angle of the mixing chambers is governed by the amount of pressure on the blast line.

In operation, the oil enters into the passage or first mixing chamber 24 where it meets with an air blast delivered centrally from the by-pass in the manner of an atomizer; the combined gases are carried down and meet with the main air or steam blast that completely vaporizes the mixture, directing it outward into the combustion chamber where, commingling with air entering through the openings in the head, it is ignited, emerging in a flame filling the outlet uniformly. As the flame passes out through the combustion chamber, the air is siphoned from the air space 41 causing a circulation through the ports 40.

In Figs. 5 and 6 is shown a modified form of single low pressure burner 50 connected to the blast pipe 51, the latter being provided with a by-pass 52 leading to an angular channel 53 formed integrally in the burner casing 50. The oil enters through the opening 54, meeting the current from the by-pass pipe 52 at an angle where it is diverted and spread in the passage or first mixing chamber 53, which is gradually decreased in height and increased in width in the manner of a flattened tube, toward the outlet 55 where it enters the main mixing chamber 57; the combined gaseous products are there acted upon by the main air current from the pipe 51 in the main mixing chamber 57 where it is completely atomized and passes through the openings 56 into the combustion chamber (not shown) as a highly inflammable vapor.

A double burner each having essentially the same characteristics as above described, is shown in Figs. 7 and 8 in which the casing 60 is divided at the front end by a partition 61, the casing having outlets 62 and 63 respectively formed in the angularly disposed burner faces, the angle of which governs the combined spread or width of flame issuing from the burner. Oil enters through the opening 64, at the bottom of which are two contracted inlet ports 65 and 66 leading to the flattened conical first mixing chambers 67 and 68. The main blast pipe 69 is arranged to support the burner casing and is provided with a by-pass 70 arranged to divert a volume of air transversely to the small oil ports 65 and 66, partially atomizing the oil in which condition it enters the second or main mixing chambers 71 and 72 through the ports 67 and 68 and is there met by the main blast, completely vaporized and carried through the openings 62 and 63 into the combustion chambers, which may be of brick or other preferred construction. Thus it will be seen that burners of extended capacity are afforded for furnaces and the like, of simple, compact construction, capable completely of vaporizing the heavy oils in present use by reason of the divided air blast and producing a flame of any desirable magnitude.

Having thus described the invention, what I claim as new and desire to secure by Letters Patent, is;

1. An oil burner consisting of an outer casing, constituting a combustion chamber, a perforate head combined therewith, a passage therein for the admission of a single jet of oil, means for atomizing the oil, said means entering the head transversely to said passage and means for conveying air under pressure directly upon the atomized oil centrally of said head.

2. An oil burner consisting of a conical casing, constituting a combustion chamber, a perforate head combined therewith, said head containing passageways, one of which enters said casing, blast pipes communicating with the passageways disposed at divergent angles and an oil pipe entering the pasageway between said blast pipes.

3. An oil burner consisting of an outer casing, constituting a combustion chamber, a perforate head combined therewith, means for admitting oil, atomizing means for the oil, an inner shell contained in said casing, spaced annularly therefrom, and means for the admission of air to the mentioned space.

4. An oil burner consisting of a conical casing, constituting a combustion chamber, a head engaging therewith containing an axial passage open to the casing, a blast pipe entering said head having an inlet communicating with said aperture at the upper edge thereof, a bypass extending from said blast pipe entering said head transversely of said inlet, a chamber therebetween, and an oil pipe having a restricted inlet entering the mentioned chamber at an angle thereto.

5. An oil burner having a frusto-conical combustion chamber, a chambered head at the larger end thereof, means for the inlet

of oil and an air blast to the chamber in said head, said head having an axial passage from the chamber of said head to the combustion chamber, means for the inlet of a second air blast to said axial passage, said passage being so formed as to prevent oil from entering said second-mentioned blast inlet and to cause a spread of the combustible mixture in the combustion chamber.

6. An oil burner having a frusto-conical combustion chamber, a chambered head at the larger end thereof, means for the inlet of oil and an air blast to the chamber in said head, said head having an axial passage from the chamber of said head to the combustion chamber, a lining within said combustion chamber spaced from the walls thereof and having its outer edge located on a line drawn from the center of the mentioned axial passage and the edge of said conical casing and means permitting a circulation of air through said combustion chamber.

7. An oil burner having a spaced double casing, constituting a combustion chamber, ports for the admission of air therebetween, a chambered supporting head provided with perforations, means for the inlet of oil and an air blast to the chamber in said head, an axial passage communicating between the chambers, means for the inlet of a second air blast to said axial passage and a contracted throat between said means and said axial passage, said contracted throat normally preventing oil from entering said second air blast.

8. An oil burner, comprising a unitary casting having an elongated mixing chamber, an outlet at one end of said mixing chamber, at an angle thereto, an air blast passage in register with said outlet, a second air blast passage entering said chamber, and an inlet for oil between said blast passages.

9. An oil burner having a combustion chamber, a chambered head removably engaged therewith, a lining partially covering the interior of said combustion chamber, ports for the admission of air to the space therebetween, a chamber formed transversely in said head, means for the inlet of oil and an air blast to the chamber in said head, said head having an axial passage from the chamber therein to the combustion chamber, means for the inlet of a second air blast to said axial passage and a contracted throat between said second air blast inlet and said axial passage, said throat being offset from said axial passage.

10. An oil burner having a frusto-conical combustion chamber, a chambered head at the larger end thereof, a lining spaced from the walls of said combustion chamber extending inward from near the front end, said lining being outwardly flanged and engaged with the walls of the chamber short of said head, means for the inlet of oil and an air blast to the chamber in said head, said chamber being transverse of said combustion chamber, a second inlet for an air blast, an axial passage between said second air blast inlet and said combustion chamber communicating with the chamber in said head and a restricted offset throat at said second air blast entrance to said axial passage.

In witness whereof I have signed my name to this specification in the presence of two subscribing witnesses.

EDWARD J. NOLAN.

Witnesses:

WARREN E. WILLIS,

HANS C. BOOS.