K. M. DAHL.

OIL BURNING FURNACE.

APPLICATION FILED JAN. 29, 1913.

1,068,744. Patented July 29, 1913.

2 SHEETS—SHEET 1.

Fig. 1.

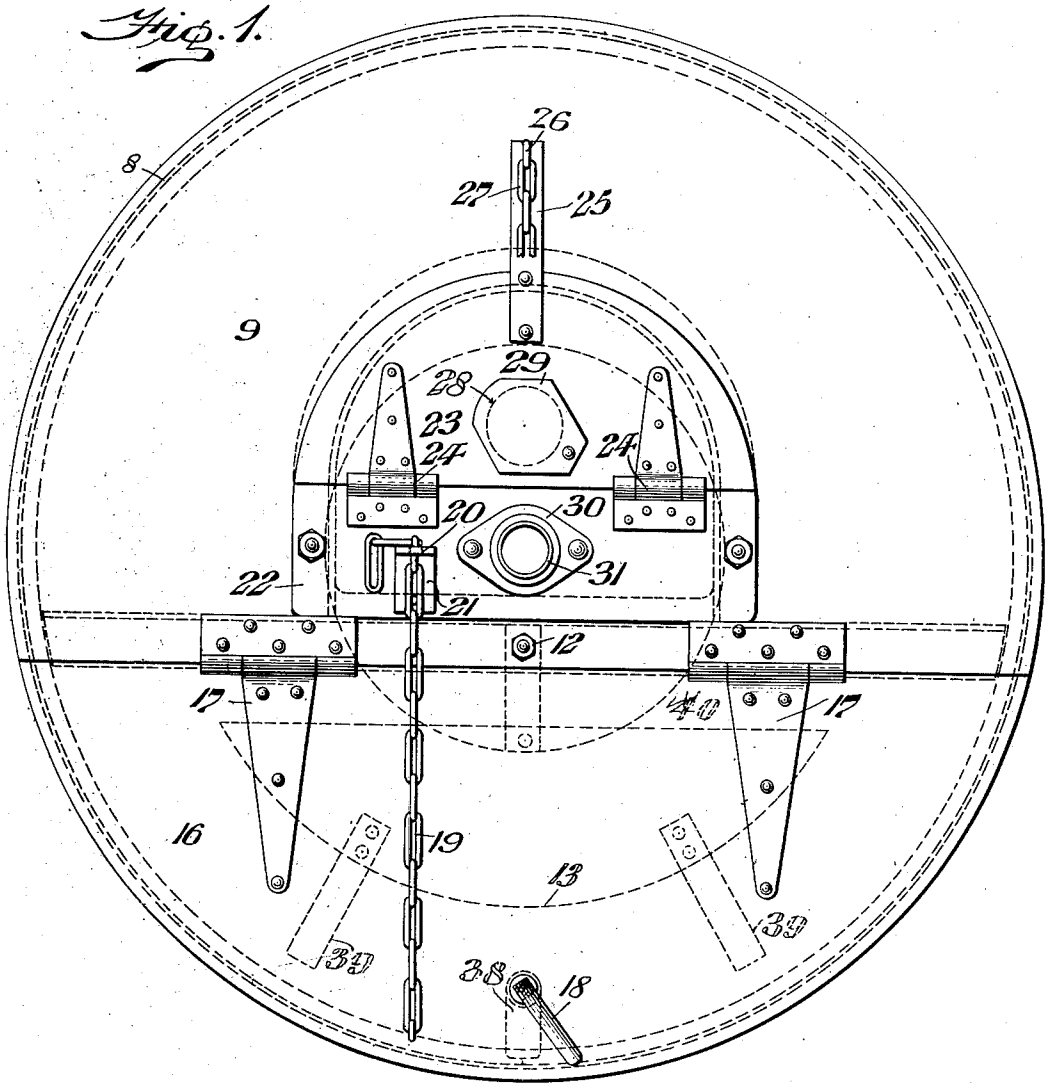

Fig. 4

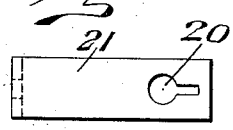

WITNESSES

H. G. Dieterich

P. F. Nagle.

INVENTOR

Knut Martin Dahl

BY Medersheim & Fairbanks

ATTORNEYS

K. M. DAHL.

OIL BURNING FURNACE.

APPLICATION FILED JAN. 29, 1913.

1,068,744.

Patented July 29, 1913.

2 SHEETS—SHEET 2.

Fig. 2.

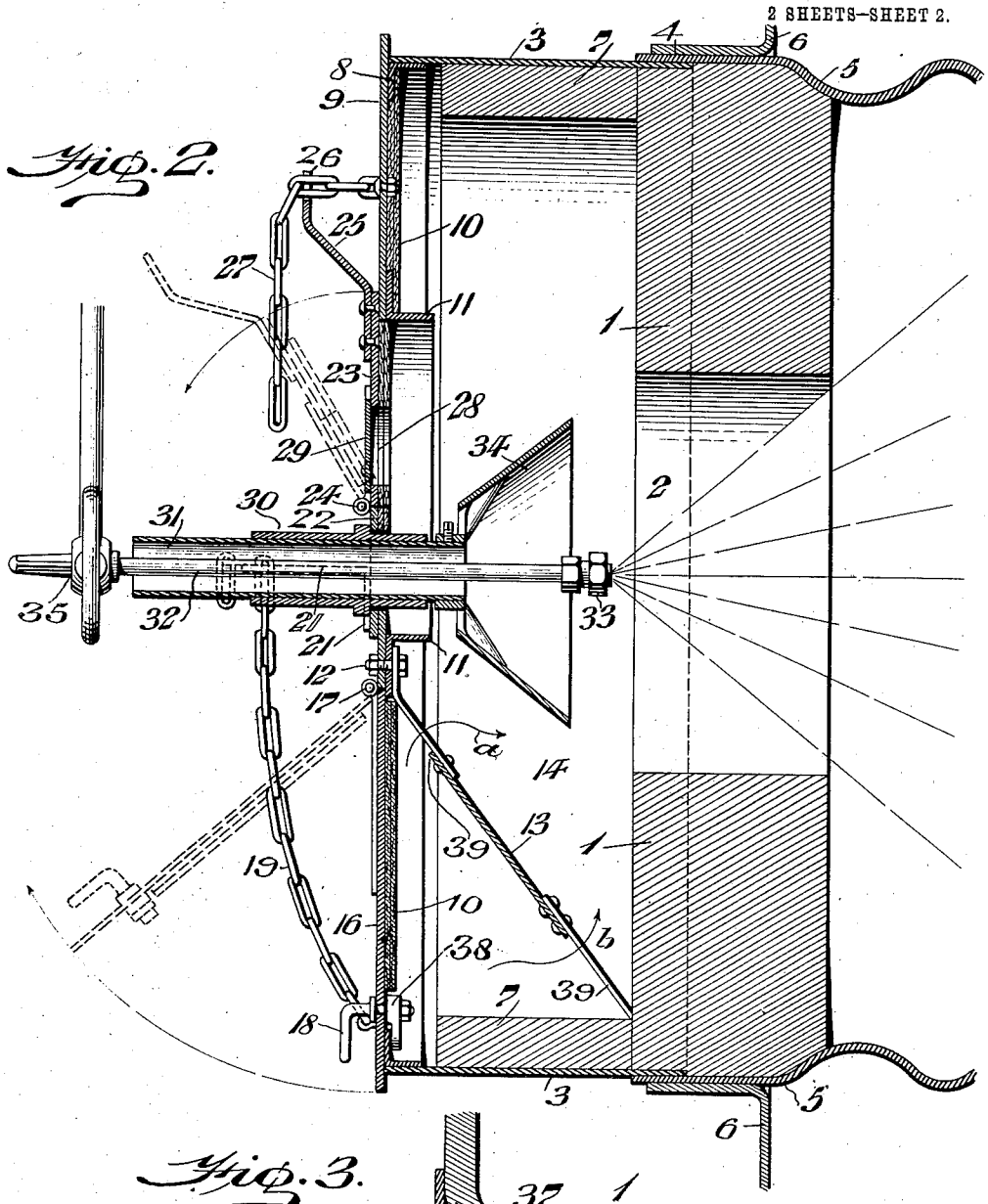

Fig. 3.

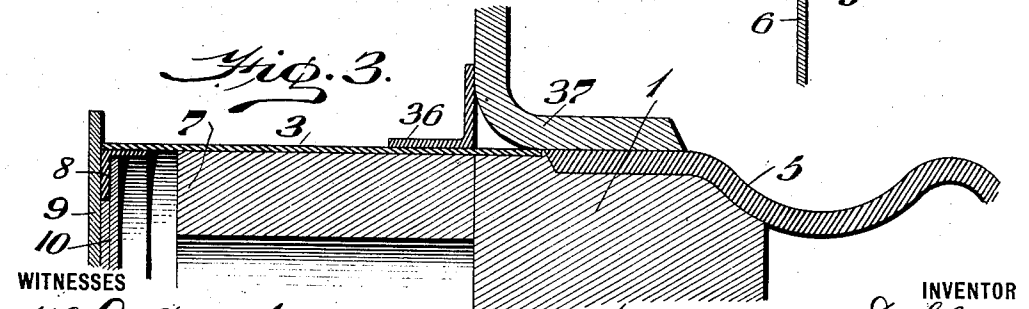

WITNESSES

H. G. Dieterich

P. F. Nagel.

INVENTOR

Knut Martin Dahl.

BY

Wiedersheim & Fairbanks

ATTORNEYS

UNITED STATES PATENT OFFICE.

KNUT MARTIN DAHL, OF SAN FRANCISCO, CALIFORNIA, ASSIGNOR TO UNION IRON WORKS CO., OF SAN FRANCISCO, CALIFORNIA, A CORPORATION OF NEW JERSEY.

OIL-BURNING FURNACE.

1,068,744. Specification of Letters Patent. Patented July 29, 1913.

Application filed January 29, 1913. Serial No. 744,844.

To all whom it may concern:

Be it known that I, KNUT MARTIN DAHL, a citizen of the United States, residing in the city and county of San Francisco, State of California, have invented a new and useful Oil-Burning Furnace, of which the following is a specification.

My invention consists of a novel construction of an oil burning furnace and its adjuncts, and in its broad aspects relates particularly to the novel construction of an extension front for an oil burning furnace, whereby I am enabled to readily equip a furnace or boiler which may have been initially installed to use coal or similar fuel with my novel extension front for use of oil or other liquid hydrocarbon fuel, which can be readily applied to existing boilers without diminishing the evaporation capacity thereof.

My present invention therefore consists of a novel extension front adapted to be attached to any desired type of furnace but especially adapted for use with oil burning furnaces, operating under either forced or natural draft, and having novel means for controlling the admission of air and for preventing radiation of heat.

It further consists of a novel construction of an oil burning furnace front having a novel construction and arrangement of doors.

It further consists of other novel features of construction, all as will be hereinafter fully set forth.

For the purpose of illustrating my invention, I have shown in the accompanying drawings one form thereof which is at present preferred by me, since the same has been found in practice to give satisfactory and reliable results, although it is to be understood that the various instrumentalities of which my invention consists can be variously arranged and organized and that my invention is not limited to the precise arrangement and organization of these instrumentalities as herein shown and described.

Figure 1 represents a front elevation of an extension front for oil burning furnaces, embodying my invention, certain parts being omitted for the sake of clearness of illustration. Fig. 2 represents a sectional elevation of Fig. 1. Fig. 3 represents a sectional elevation showing another manner of securing the extension front to the furnace wall proper. Fig. 4 represents a plan view of a bracket.

Similar numerals of reference indicate corresponding parts in the figures.

Referring to the drawings:—It will be understood that the manner of securing my novel extension front will vary somewhat in accordance with the type of furnace in conjunction with which it is employed.

1 designates the front wall of the furnace usually constructed of fire brick and provided with an opening 2 forming a mixing or commingling chamber.

3 designates the side wall of the extension front which overlaps the front wall 1, as indicated at 4, and connected, if desired, with the furnace casing members 5 and 6. The side wall 3 is annular, in the present instance, and constructed of sheet iron, within which is a fire brick lining 7.

8 designates an angle iron connected with the plate 3 and also with the front plate 9, which latter is provided on its inner face with any desired number of layers of asbestos 10.

11 designates an annular angle iron secured to the plate 9 by fastening devices 12, certain of which latter also secure a baffle plate 13 in position in the preheating chamber 14, which latter is of larger diameter, in the present instance, than the mixing chamber 2. The baffle plate 13 has its top and bottom portions spaced away from the furnace front and the furnace wall 1 respectively, so as to admit ingress of air over its top and bottom edges, and is angularly arranged with respect to a door 16 hinged at 17 to the front plate 9.

38 designates a latch, having an operating handle 18; 19 designates a chain having one end connected with the door 16, said chain being adapted to interlock with an aperture 20 in a bracket 21, carried by a plate 22, secured to the front plate.

23 designates a door hinged at 24 and provided with a bracket 25 having a slot 26 therein adapted to receive a chain 27, one end of which is secured to the front plate 9. The door 23 is apertured, as at 28, to form a sight opening which is normally closed by a pivoted door 29.

The plate 22 is apertured to receive a

thimble 30, within which is longitudinally adjustable, a sleeve 31, open at its outer end to the atmosphere and through which passes the fuel conduit 32 provided with an atomizer 33, preferably centrally located with respect to the mixing chamber 2.

Located within the chamber 14 of the extension front is a hollow cone or similar shaped damper 34 presenting its end of larger diameter to the mixing chamber and longitudinally adjustable with respect to the atomizer or burner 33, which latter may be of any desired construction. For purposes of illustration, the air damper 34 is shown as carried by the sleeve 31 and longitudinally adjustable therewith.

35 designates a controlling valve for the fuel conduit 32.

In the embodiment seen in Fig. 3, the furnace is shown as having an angle 36 secured to the side wall 3 of the extension front and to a plate 37 connected with the furnace casing 5.

In the operation, the fuel, such as oil, after being heated to a desired degree, is forced under a desired pressure through the conduit 32 to the atomizer 33 and a perfect flame is obtained as soon as the oil leaves the burner. The air admission is controlled by the proper manipulation of the doors 16 and 23. The damper 34 and burner 33 are relatively adjustable and, in the present instance, the burner is shown as stationary and the damper 34 longitudinally adjustable with respect to said burner 33.

By securing the annular side wall 3 to the furnace front or the forward end of the boiler shell in the manner described, I am enabled to utilize or attach my invention to boilers of any standard type already installed, without unnecessary dismantling of the same and without detracting from the external appearance thereof, and by lining the extension front with insulating material at 7 and 10, I prevent the radiation of heat into the boiler room. The baffle plate or deflector 13 is preferably curved or arc shaped at its lower edge, as indicated in dotted lines in Fig. 1, and if desired, may be provided at its lower portions, with the feet 39 to retain the deflector in position, the upper edge 40 of the deflector terminating a short distance from the asbestos lining 10, so that air is permitted to flow over the upper and lower edges of the deflector to the commingling chamber 2, as indicated by the arrows *a* and *b* in Fig. 2, and by opening the door 15, the amount of air necessary to promote combustion may be regulated as desired and by the interposition of the deflector, the ingress of the moving air is slightly retarded and the air preheated before reaching the commingling chamber 2. The oil is conducted to the atomizer 33 under pressure and is preferably heated, but such preliminary heating may be dispensed with if desired, or it may be dispensed with after the burner is in operation.

While my invention, in its broad aspects, is capable of use with any suitable atomizer, I prefer to employ the atomizer of my prior patents, No. 1,011,036, dated December 5th, 1911, and No. 1,008,119, dated November 7th, 1911.

It will be understood by those skilled in this art, that in vessels which are already equipped with furnaces, the amount of space available to install an oil burning system is limited, and if the furnace front is cut away to accommodate the system, the evaporation capacity of the boiler is reduced. By the employment of my present invention, it is unnecessary to cut away the furnace wall, and it is only necessary to connect therewith and exterior thereof, my novel extension front, whereby the area of the combustion chamber is not decreased in any manner whatsoever.

It will now be apparent that I have devised a novel and useful construction of an oil burning furnace which embodies the features of advantage enumerated as desirable in the statement of the invention and the above description, and while I have, in the present instance, shown and described a preferred embodiment thereof which has been found in practice to give satisfactory and reliable results, it is to be understood that the same is susceptible of modification in various particulars without departing from the spirit or scope of the invention or sacrificing any of its advantages.

Having thus described my invention, what I claim as new and desire to secure by Letters Patent, is:—

1. An extension front for an oil burning furnace, comprising a side wall, a non-conducting lining therefor, a front plate secured to said side wall, a non-conducting lining therefor, a lower door pivoted to said front plate, and extending across substantially the entire lower portion of said front plate, and an inclined baffle plate attached to the inner portion of said front plate, and adapted to permit the ingress of air over its upper and lower edges to the point of combustion.

2. An extension front for an oil burning furnace, comprising a side wall, a non-conducting lining therefor, a front plate secured to said side wall, a non-conducting lining for said front plate, a lower door pivoted to said front plate, and extending across the lower portion of the furnace front, an inclined baffle within said side wall to retard and deflect the air passing to the point of combustion, and means to adjust the position of said door.

3. In an oil burning furnace, a boiler shell, a front wall therein having a com-

mingling chamber 2 therein, a detachable extension front forming a continuation of said boiler shell, non-conducting lining therefor, a front plate for said extension front and spaced from said wall to form a preheating chamber, a lower door pivoted to said front plate, and an inclined baffle plate in the lower portion of said preheating chamber and adapted to permit the ingress of air over its edge to said commingling chamber.

4. The combination of a furnace wall having an opening therethrough forming a mixing chamber, a detachable extension front secured upon said wall and having an upper and a lower controllable air opening, an oil burner discharging into said mixing chamber, a hollow cone shape damper presenting its face of greater diameter toward said wall, means to longitudinally adjust said damper, and a baffle plate intermediate said lower opening and said burner.

5. The combination of a furnace wall having an opening therethrough forming a mixing chamber, an extension front secured to said wall and having a controllable air opening, a hydrocarbon burner discharging into said mixing chamber, a hollow cone shape damper presenting its face of greater diameter toward said wall, a baffle plate intermediate of said damper and said controllable air opening, and means to longitudinally adjust said damper.

6. The combination of a furnace wall having an opening therethrough forming a mixing chamber, an extension front secured to said wall and having a controllable air opening, and comprising an outer metal casing lined with heat resistant material, a liquid hydrocarbon burner discharging into said mixing chamber, a hollow cone shape damper presenting its face of greater diameter toward said wall, means to longitudinally adjust said damper, and a baffle plate intermediate said opening and damper.

7. The combination of a furnace wall having an opening therethrough forming a mixing chamber, an extension front comprising an annular metal casing secured to said wall and lined with fire brick, a front wall lined with asbestos and having a controllable air opening, a baffle plate in the lower portion of said extension front, a sleeve adjustable through said front wall, a liquid hydrocarbon burner within said sleeve and discharging into said mixing chamber, a cone shaped damper between said front wall and said burner, and means exterior of said extension front to longitudinally adjust said damper with respect to said burner.

8. The combination of a furnace wall having an opening therethrough forming a mixing chamber, an extension front forming a preheating chamber exterior of said wall and comprising an annular metal casing secured to said wall and lined with fire brick, and a front wall lined with asbestos and having a plurality of controllable air openings, means in said preheating chamber to retard and deflect the air passing from one of said openings to said mixing chamber, a sleeve adjustable through said front wall, a burner within said sleeve and discharging into said mixing chamber, an apertured damper between said front wall and said burner, and means exterior of said extension front to longitudinally adjust said damper with respect to said burner.

9. An extension front for an oil burning furnace, comprising a side wall secured to the furnace front, a non-conducting lining therefor, a front wall secured to said side wall, a non-conducting lining for said front wall, a lower door pivoted to said front wall, an apertured plate secured to said front plate above said door, an upper door pivoted to said apertured plate and provided with a controllable peep hole, means to secure said first door in its adjusted position, means to secure said second door in its adjusted position, an inner flanged plate secured to said front plate and surrounding the aperture of said apertured plate and said upper door, and a baffle secured to said apertured plate and of less dimensions than said lower door and angularly inclined with respect thereto.

10. The combination of a furnace wall having an opening therethrough forming a mixing chamber, an extension front secured to said wall and having a controllable air opening, a hydrocarbon burner discharging into said mixing chamber, a hollow cone shaped damper supported substantially concentrically of said burner, means for longitudinally adjusting said damper, and a baffle plate intermediate of said damper and controllable air opening.

KNUT MARTIN DAHL.

Witnesses:
FREDERICK BIRDSALL,
MAURICE ASHER.