May 4, 1965 R. M. WINNAN ETAL 3,181,596

BI-FOLD DOOR UNIT

Filed Nov. 29, 1962

4 Sheets-Sheet 1

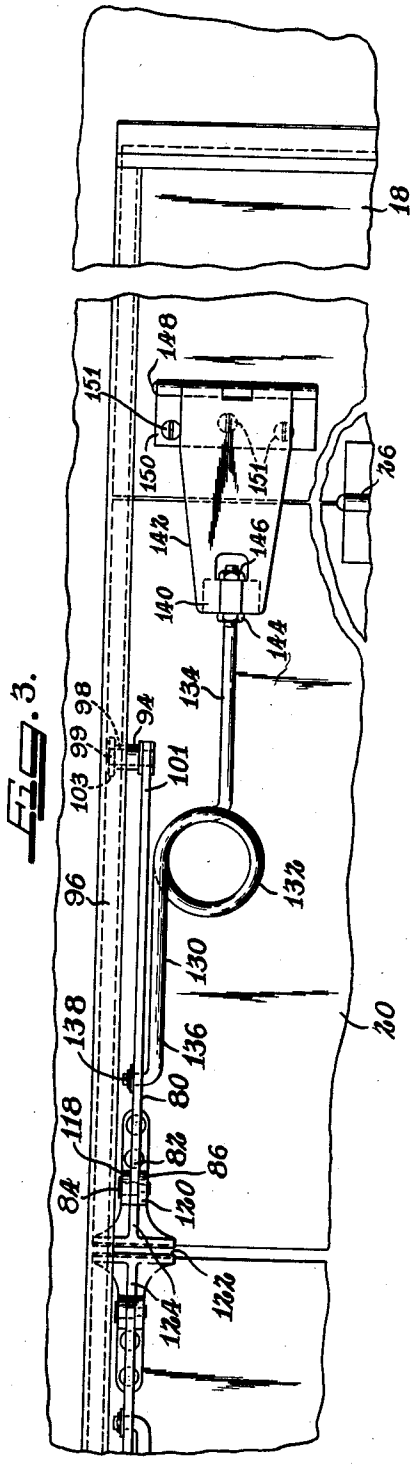

FIG. 3.

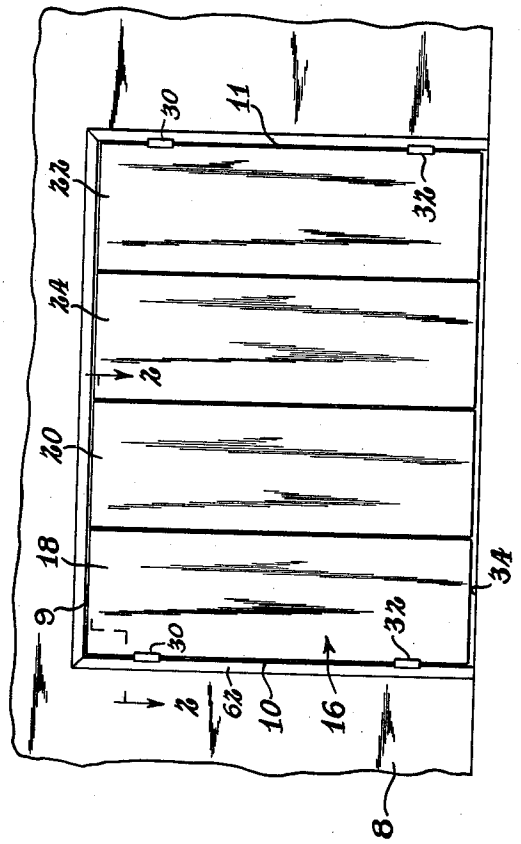

FIG. 1.

INVENTORS
RUSSELL M. WINNAN
WILLIAM D. PORTER
BY
Fidler, Beardsley & Bradley
Attys.

May 4, 1965 R. M. WINNAN ETAL 3,181,596

BI-FOLD DOOR UNIT

Filed Nov. 29, 1962 4 Sheets-Sheet 2

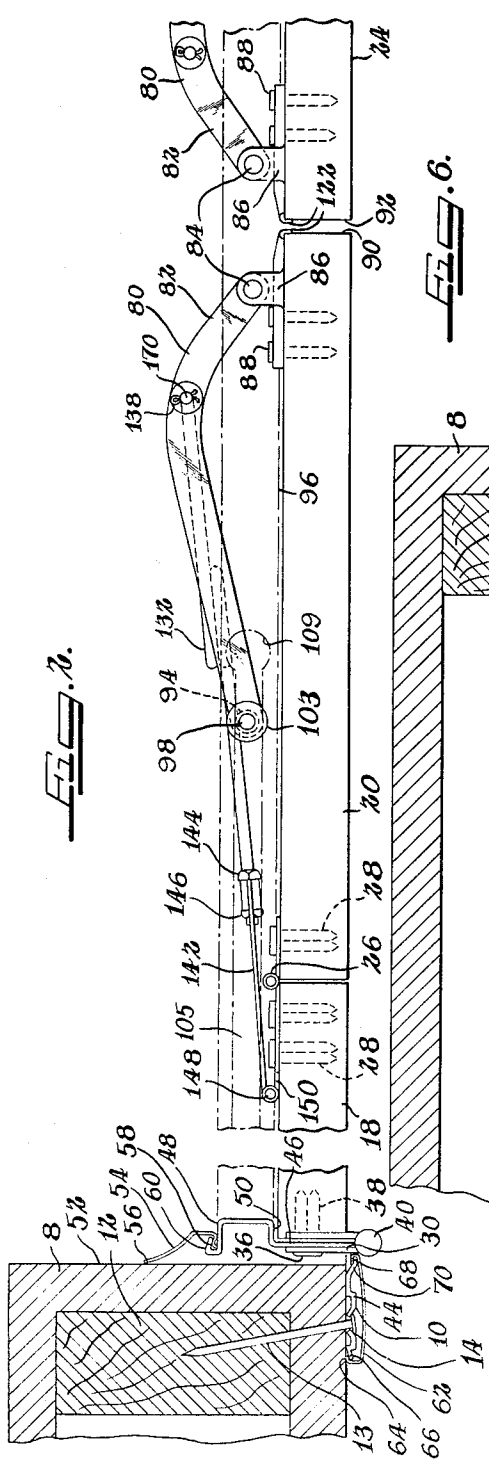

Fig. 2.

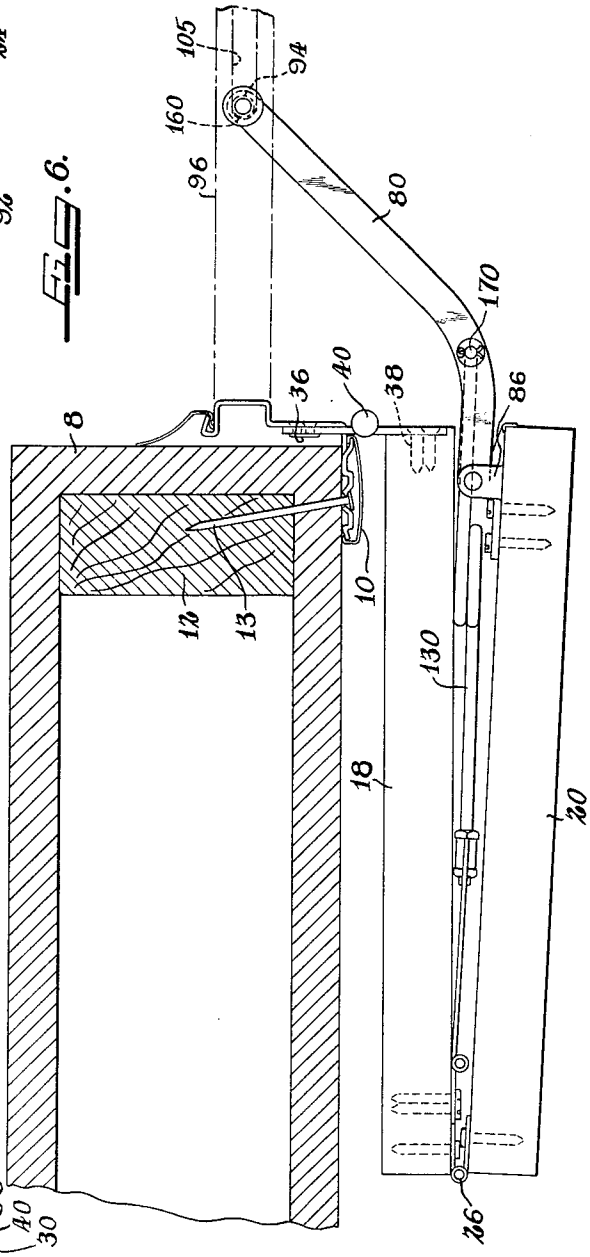

Fig. 6.

INVENTORS
RUSSELL M. WINNAN
WILLIAM D. PORTER
BY
Fidler, Beardsley & Bradley
Attys.

May 4, 1965 R. M. WINNAN ETAL 3,181,596

BI-FOLD DOOR UNIT

Filed Nov. 29, 1962 4 Sheets-Sheet 3

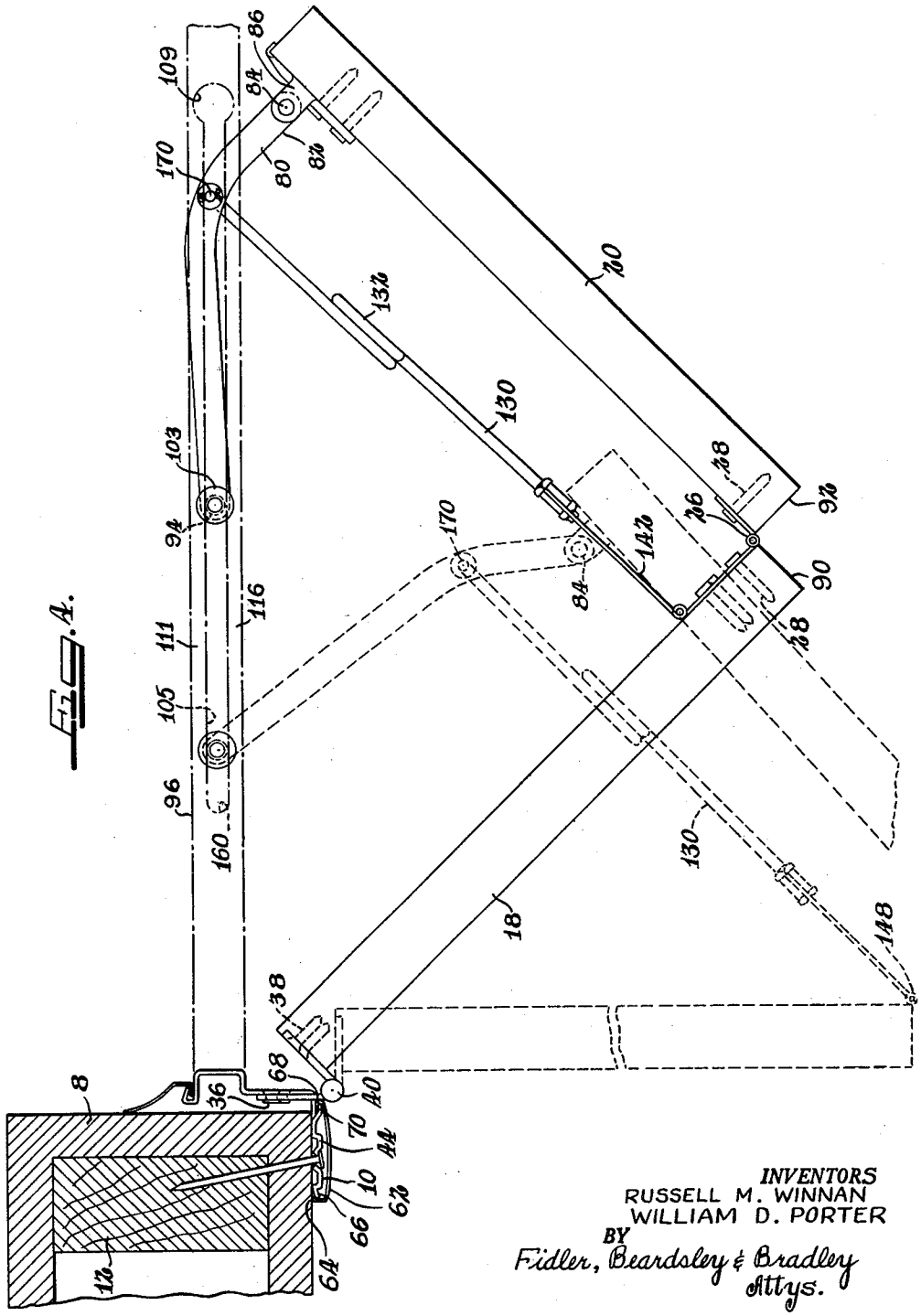

FIG. 4.

INVENTORS
RUSSELL M. WINNAN
WILLIAM D. PORTER
BY
Fidler, Beardsley & Bradley
Attys.

May 4, 1965 R. M. WINNAN ETAL 3,181,596

BI-FOLD DOOR UNIT

Filed Nov. 29, 1962 4 Sheets-Sheet 4

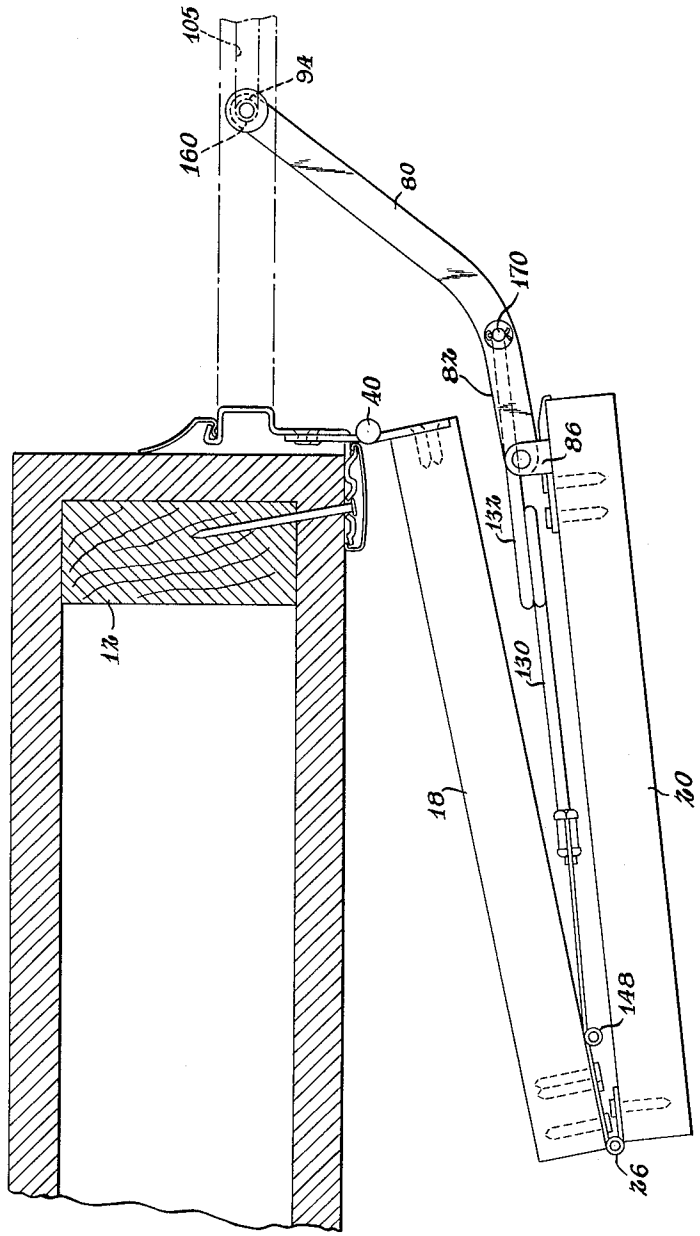

Fig. 5.

INVENTORS
RUSSELL M. WINNAN
WILLIAM D. PORTER
BY
Fidler, Beardsley & Bradley
Attys.

United States Patent Office

3,181,596
Patented May 4, 1965

3,181,596

BI-FOLD DOOR UNIT

Russell M. Winnan, Miami, and William D. Porter, Hialeah, Fla., assignors to American Screen Products Company, Chicago, Ill., a corporation of Florida

Filed Nov. 29, 1962, Ser. No. 240,783
17 Claims. (Cl. 160—206)

This invention relates to improvements in bi-fold doors, and is more particularly directed to new and improved bi-fold door units and hardware assemblies therefor.

Heretofore, difficulty has been encountered in the design of bi-fold door units comprising door sections hinged to each other and to the door frame which can be readily swung between fully opened and fully closed positions located approximately 180° apart and while such units have been provided they have not fully satisfied the problems. Design problems in the manufacture of such bi-fold door units are that of providing a hardware assembly which will adequately control the movement of the hinged door sections between the open and closed positions and which will be substantially concealed when the door sections are open. Hardware assemblies of the prior art have the disadvantage of being complex expensive structures with moving parts that can malfunction during movement of the door sections of the unit between the open and closed positions. Among the other problems associated with such door units is that of maintaining the door sections in the opened and closed positions.

With the present invention, the problems and difficulties of the prior art are substantially overcome by the provision of simple bi-fold door hardware, which controls the movement of the door sections of the door unit along predetermined paths, which remains substantially concealed, which has a minimum of moving parts, and which positions and holds the door sections under tension.

Accordingly, an object of the present invention is to provide a new and improved bi-fold door unit.

Another object of the present invention is to provide a bi-fold door unit including a plurality of door sections hinged together, and means for controlling movement of the door sections between first and second positions.

Still another object of the present invention is to provide a bi-fold door unit including means for preventing free swinging movement of the outer door section of the unit.

A further object of the present invention is to provide a bi-fold door unit including a plurality of door sections hinged together and means for applying tension to the door sections during the final stages of opening and closing of the door sections.

A still further object of the present invention is to provide a bi-fold door unit including a plurality of door sections hinged together, and means for automatically applying tension to the door sections during the final stages of opening and closing of the door unit, which tension can be adjusted.

Another object of the present invention is to provide a bi-fold door unit having a plurality of door sections hinged together which requires a positive external force to overcome a pre-tensioning of the door sections in order to open or close the doors.

Still another object of the present invention is to provide a hardware assembly for controlling the opening and closing movements of bi-fold door units, which assembly is simple in construction and has limited moving parts.

A further object of the present invention is to provide a hardware assembly for automatically controlling opening and closing movements of door sections of a bi-fold door unit, which assembly remains substantially concealed.

A still further object of the present invention is to provide a hardware assembly for controlling opening and closing movements of bi-fold door sections and including a tension control device which applies tension to the doors during the initial and final stages of the door opening and closing operations.

These and other objects, features and advantages of the present invention will become readily apparent from a careful consideration of the following detailed description, when considered in conjunction with the accompanying drawing, illustrating a preferred embodiment of the present invention, wherein like reference numerals and characters refer to like and corresponding parts throughout the several views, and wherein:

FIG. 1 is a view in front elevation of a bi-fold door unit constructed in accordance with the principles of the present invention;

FIG. 2 is an enlarged fragmentary view taken along line 2—2 of FIG. 1;

FIG. 3 is an enlarged fragmentary rear view of the door unit of FIG. 1 illustrating the tension control arm and guide arm arrangement of FIG. 2 with the door sections in closed positions;

FIG. 4 is a view similar to FIG. 2 illustrating a pair of hinged door sections in a partially opened position;

FIG. 5 is a view similar to FIG. 4 illustrating a pair of door sections in another partially opened position, and

FIG. 6 is a view similar to FIG. 5 illustrating a pair of door sections in the fully opened positions.

Although the present invention has a variety of applications, the drawings hereof illustrate a bi-fold door unit mounted in an opening in a wall of a room.

Mounted in an opening formed in wall 8 of a room is a frame assembly for a bi-fold door unit which comprises a top header 9 and side jambs 10 and 11. The frame is secured, as appears in FIG. 2, to a stud 12 by nails 13 which pass through openings 14 formed in the side jambs 10 and 11. The side jambs and top header may be constructed of wood or, as shown in the drawing, may be constructed of roll formed or extruded metal, such as aluminum.

The bi-fold door unit is generally indicated by the numeral 16 in FIG. 1 and comprises a first pair of door sections 18 and 20 and a second pair of door sections 22 and 24. The door sections 18 and 20 are joined, as appears in FIG. 2, by butt hinges 26 which are secured, as by screws 28, to the rear surface of the door sections 18 and 20. Similar butt hinges (not shown) secure the door sections 22 and 24. The hinged door sections 18 and 20, and 22 and 24 are secured to the side jambs 10 and 11, respectively, by hinges 30 and 32 so that the bottom edges of the doors are raised slightly above the floor 34 to facilitate opening and closing of the doors. The hinges 30 and 32 are secured, as by riveting, to the side jamb 10, as at 36, and secured, as by screws 38, to the side edge of the outer doors 18 and 22 adjacent the jambs (FIG. 2). The hinge pivot pin 40 is located exteriorly of the front surface of the door section 18. Thus, with the above-described arrangement, the door sections 18 and 20 and door sections 22 and 24 are free to pivot about the hinges 26 and hinges 30 and 32 outwardly, as appears in FIG. 4.

Each of the side jambs 10 and 11, as appears in FIG. 2, is L-shaped in configuration and includes one side flange 44 in which the nail bores or apertures 14 are provided and another flange 46 to which is riveted the hinges 30 and 32. The flanges 44 and 46 extend perpendicularly to each other and the flange 46 carries a raised channel-shaped portion 48 which extends the length of the door sections and provides a door-stop surface 50 therefor, as clearly appears in FIG. 2.

It will be observed that the flange 46 may be in spaced relation to the side 52 of the wall 8 so as to provide clearance for inserting the unit in rough or finished openings of

varying sizes. As appears in FIG. 2, vertically extending jamb trim strips 54 may be provided, one trim strip 54 for each of the side jambs 10 and 11, and header 9. These trim strips 54, constructed preferably of a resilient plastic, bear at one end 56 against the side wall 52 and are provided with a flange 58 at the other side thereof which is trapped in an inturned and inwardly angled trapping flange 60 formed of the end of channel 48. These trim strips may be eliminated in certain installations if desired.

A trim strip 62 which extends vertically with the flange 44 of the side jamb 10 is provided to mask the jamb flange 44 (FIG. 2). On one side thereof, the flange 44 has an outwardly and upwardly angled trapping flange 64 which is provided to hold an inturned flange 66 of the strip 62. The trim strip 62 also carries opposite the flange 66 a second inturned flange 68 which seats behind an outturned flange or plurality of spaced flanges 70 raised from the surface of the jamb flange 44 and at an angle to the plane thereof. Preferably the trim 62 is of flexible material, such as plastic, so that the trim may be either slid longitudinally on the flange 44 by the installer, or may be snapped on, depending upon the preferences of the installer.

A feature of the present invention resides in the provision of hardware for controlling the movement of the door sections of the door unit during movement of the door sections from between fully opened and fully closed positions. Another feature of the present invention resides in the provision of hardware which, when actuated, applies tension automatically to the door sections during initial and final opening and closing movements of the door sections. In addition, such hardware also maintains the door sections under tension when the door sections are in the fully opened or fully closed positions, so that a positive external force must be exerted or applied to pull the doors from either the fully opened or fully closed positions and in an amount sufficient to overcome the said tension. The present invention also provides means for adjusting the tension applied to the doors. This hardware is simple and inexpensive in construction and is substantially concealed during operation, so as not to give an offensive appearance.

As appears in FIG. 2, the means for controlling movement of the door sections includes a pair of angled door guide arms or follower arms 80, one guide arm 80 being provided for each set of door sections 18 and 20, and 22 and 24. These door guide arms 80 in conjunction with the other hardware parts guide the opening and closing movements of the door sections.

As appears in FIG. 2 and FIG. 3, each of the angled door guide arms 80 is pivotally connected at one end 82 by a pivot pin 84 to a bracket 86 which is mounted, as by screws 88, to the rear surfaces of the outer door sections 20 and 24, respectively, adjacent the leading edges 90 and 92 thereof. At its end opposite the end 82, each of the guide arms 80 fixedly carries a guide member 94 which is preferably constructed of a material having a low coefficient of sliding friction, such as nylon, for sliding movement of the guide member 94 linearly in a longitudinally slotted guide channel 96. The guide member 94 is a nylon sleeve bored to receive a pin 98, which, as best appears in FIG. 3, carries a head 99 which is fitted in a counterbore formed in the guide member 94. The pin 98 is fixedly secured by the head 99 in the counterbore of the guide member and, thus, to the guide member 94. The opposite end of the guide member 94 is fixedly secured to the end 101 of the guide arm 80 by the pin 98 and, thus, the guide member 94 is fixedly carried by the arm 80. The guide member 94 also has a radial flange 103 which serves to prevent the member 94 from leaving the slot 105 in the guide channel 96 during linear sliding movement of the guide member along the channel.

In the embodiment the guide channel 96 is part of the top header 9. The guide channel 96 has a pair of axial slots 105 formed therein which are spaced inwardly from the plane of the door sections or rearwardly of the door sections a distance sufficient to permit pivotal movement of the guide arm 80 and linear sliding movement of the guide member 94 in the channel 96 during the opening and closing movements of the door sections.

The guide channel 96 is preferably a channel having the pair of slots 105 formed therein which slots extend longitudinally of the channel and terminate in spaced relation to each other at one end and in spaced relation to the jambs at their other ends. Adjacent each other, each of the guide slots 105 has an enlarged entrance portion 109 (FIGS. 2, 4 and 6) to permit insertion and removal of the guide member 94 from the slots 105. The guide channel 96 is so constructed that the flange 103 rides on the inner surfaces of a pair of inturned and facing flanges 111 and 116 of the channel 96 which defines the slot 105, as appears in FIG. 4. The slots 105 are so dimensioned that the guide member 94 may slide linearly along the slot 105 between first and second positions determined by the fully opened and fully closed positions of the door sections. The weight of the door sections is primarily carried by the jamb hinges 30 and 32.

As aforesaid, the brackets 86 are connected to the rear surfaces of the outer door sections adjacent the facing edges 90 and 92 of the outer door sections 20 and 24. Each of the brackets 86 carries an upstanding lug, lugs 118 and 120, respectively, which are in spaced relation to each other (FIG. 3) and each of which is bored to receive the pivot pin 84. The lugs 118 and 120 thus serve as a yoke for the end 82 of the guide arm 80. Preferably, each of the brackets 86 includes a nylon part having a forwardly-turned flange 122 (FIGS. 2 and 3) which serves as a bumper or wear plate. In addition each of the nylon parts of the brackets 86 includes a raised portion 124 (FIG. 3) which acts as a stop, as hereinafter more fully described.

To assist in control of the movement of the door sections between the fully opened and fully closed positions, a tension control arm 130 is provided which cooperates with the guide arm 80 to accomplish this result. The tension control arm 130 is provided to apply tension automatically to the door sections against the external force required to pull the door sections outwardly to initiate movement of the door sections from the fully closed position shown in FIG. 2.

Each of the tension control arms 130, as appears in FIG. 3, is a torsion spring which comprises a body portion constructed of a coil of spring material, indicated by the numeral 132 in FIG. 3, an inner door connecting arm 134 and a guide arm connecting arm 136.

The arm 136 may be pivotally connected to the guide arm 80 in any conventional manner, and, for purposes of illustration, is shown in FIG. 3 as having an upturned end extending through a bore formed in the guide arm 80 and pivotally secured thereto, as by a cotter pin 138.

The connecting arm 134 passes through an opening of a bracket strap 40 carried by a hinge plate 142. A pair of adjusting nuts 144 and 146 fitted to the end of the arm 134 adjustably secure the arm 134 to the hinge plate 142. The nuts 144 and 146 provide means for adjusting the tension in the control arm 130. The hinge plate 142 is secured by a pivot pin 148 to a mounting plate 150 secured as by screws 151 to the inner door section 18. The plate 150 is mounted to the door section 18 adjacent the top and the outer edge thereof for purposes hereinafter described.

In the fully closed position shown in FIG. 2, the tension control arm 130 and the guide arm 80 cooperate with the guide member 94, bracket 86 and hinge plate 142 to maintain the door sections 18 and 20 in closed position under tension against the guide channel 96, which serves as a stop.

It will be observed from FIG. 2 that the guide member 94 is located at a point between the control arm 130 and the pivot pin 84 of the guide arm 80 and the longitudinal axis of the control arm 130 is behind or past (FIG. 2)

the guide member 94. When in this position, the tension control arm 130 holds the door sections 18 and 20 in the fully closed position as viewed in FIG. 2.

To initiate opening of the door sections, an external force is applied to a pull (not shown) which is located adjacent the hinge 26 on the outer surface of the doors 20 and 24. This external force is applied outwardly and must be in an amount sufficient to overcome the force applied by the tension control arm 130 in holding the door sections 18 and 20 in the fully closed positions. The door sections 18 and 20 then begin to pivot and fold outwardly (or downwardly as viewed in FIG. 2) about the hinges 26, 30 and 32. Such outward movement of the door sections causes the hinge plate 142 (FIG. 2) to move outwardly (or downwardly as viewed in FIG. 2) and such movement of the hinge plate 142 causes pivoting of the tension control arm 130 about the pivot point 170 (FIG. 2) on the guide arm 80. The lugs 118 and 120 of the left hand bracket simultaneously pivot about the point 84 counterclockwise, as viewed in FIG. 2. During this initial outward movement of the door sections, the tension control arm 130 maintains a tension force acting against the external force of the pull of the individual opening of the doors.

When the tension control arm 130 has pivoted about the point 170 so that the longitudinal axis of the control arm 130 has passed beneath the guide member 94, as viewed in FIG. 2, the tension applied to the door sections by the tension control arm is such as to cause the door sections to be moved because the tension applied to the spring in their opening direction until the tension in control 130 is released.

After such tension is released, the doors can move in opening direction to the relative positions shown in full lines in FIG. 4. In moving the door sections to this full line position shown in FIG. 4, the guide member 94 slides linearly in the channel 96 toward the wall 8 of the room as the end 82 of the guide arm 80 continues to pivot about the pin 84 and this action continues until the door sections reach the positions shown in dotted lines in FIG. 4. During such movement the end of the arm 80 fixedly carrying the guide member 94 pivots clockwise, and the tension control arm 130 continues to pivot about point 170.

The door sections 18 and 20 continue to pivot about hinges 30 and 32 and guide arm 80 and control arm 130 continue their pivoting action as the door sections move toward the positions shown in FIG. 5 shortly after the door sections move beyond the position shown in dotted lines in FIG. 4, guide member 94 engages the end 160 of slot 105. During subsequent movement the guide member 94 bears against end 160 of slot 105 as seen in FIGS. 5 and 6. As the door sections continue movement from just past the dotted line position in FIG. 4 toward the positions of FIG. 5 tension forces will be set up through control arm 130, guide arm 80 and hinge plate 142. This tension will be exerted between the end 160 of slot 105 and pivot pin 148 (or the pin of hinge 26 since pin 148 and 26 are fixedly connected). In moving the door sections to the positions shown in FIG. 5, the pivot pin 26 moves to a point above an imaginary line drawn between the axis of the guide member 94 and the axis of hinge pin 40, as viewed in FIG. 5. When pivot pin 26 reaches this imaginary line the tension forces will be at a maximum. Movement of the pivot pin across this imaginary line to a position above the line will cause the tension forces to be applied to the door sections 18 and 20 in a direction to move the door sections 18 and 20 to the fully open positions against the wall surface, and, thus, will insure that the door unit moves to the fully opened position, shown in FIG. 6. In addition, this tension applied to the door sections by the control arm 130 (since arm 130 is a spring member) will maintain the door sections in the fully opened position, until an external force is once again applied thereto to overcome the tension applied by the arm 130 to move the door sections through the positions shown in the drawing or to the fully closed positions shown in FIG. 2. Also, it should be appreciated that due to the pivot locations and their positionment in closed position, a force would be exerted through the linkage to hold the doors closed even if arm 130 was not under tension.

The nylon part of bracket 86 has a raised portion 124 that serves as a stop for control arm 80. When the door sections reach the position shown in FIG. 5 the end 82 of control arm 80 strikes against raised portion 124 to prevent further rotation of control arm 80 about pivot 84 as the door sections move to fully open position. This prevents the axis of pivot pin 170 from moving below a line through pivot 84 and pivot 148 (of FIG. 5) which would cause binding of the hardware.

It will be appreciated that to move the door sections from the fully opened positions to the fully closed positions, the door sections, guide arm, and tension control arm move through approximately the same positions above described but in reverse order.

As the door sections approach the closed position shown in FIG. 2, the plastic flange 122 of bracket 86 strikes the front side of guide channel 96 and slide therealong. As the door section moves toward closed position the longitudinal axis of control arm 130 will be below pivot 94 as seen in FIG. 2. As this axis moves toward pivot 94 (upward in FIG. 2) the tension will increase in arm 130.. After arm 130 moves upwards past pivot 94 (FIG. 2) this tension will then be exerted between pivots 148 and 170 to force and hold the door sections in closed position.

Thus, it will be observed that the bi-fold door unit of the present invention provides a new and improved movable door guide arm having adjacent one end thereof a pivotal connection to the outer door section for controlling movement of the leading edge 90 of the outer door section along a predetermined path as the door sections are moved between fully opened and fully closed positions. In addition, the present invention features means for controlling movement of the opposite end of the guide arm along a predetermined path during movement of said door sections between the fully opened and fully closed positions. Moreover, movable means carried between the guide arm and the inner door section is provided for applying tension to the said door sections when the door sections are in predetermined positions relative to each other. The present invention has a particular application for door units in which the door sections are movable between fully closed positions and fully opened positions which are 180° apart. The movable tension control arm, carried between the guide arm and the inner door section, is actuatable automatically to apply tension to the door sections when the door sections approach both the fully opened positions and the fully closed positions. In addition, this tension is applied by the tension control arm to hold the door sections in either the fully opened positions or fully closed positions with a predetermined amount of force which must be overcome by the application of an external force to move the door sections from either of these positions. However, once an initial force has been applied to the door sections the momentum of the door sections and guiding actions of the hardware will usually move them to the desired position even if the force is removed.

Although various modifications of the present invention will become readily apparent to those versed in the art, it should be understood that what is intended to be encompassed within the scope of the patent warranted hereon are all such embodiments as reasonably and properly come within the scope of the contribution to the art hereby made.

We claim:

1. A bi-fold door unit including at least an inner door section adapted to be hinged to a door frame and an outer door section adapted for hinged movement relative

to the inner door section, a movable door guide arm having adjacent one end thereof a pivotal connection to the outer door section for controlling the movement of the leading edge of the outer door section along a predetermined path as said door sections are moved between opened and closed positions, means for controlling movement of the opposite end of the guide arm along a predetermined rectilinear path during movement of said door sections between said positions, and movable means operably connected to and carried between said guide arm and the inner door section for applying tension to said door sections when the door sections are in predetermined positions relative to each other.

2. The unit of claim 1 wherein said movable means carried between the guide arm and the inner door section is automatically actuatable means for applying said tension only when the door sections approach both the opened position and the closed position.

3. The unit of claim 1 wherein said movable means carried between the guide arm and the inner door section is actuatable means for applying tension to said door sections to hold said sections in both said opened position and said closed position with a predetermined amount of force.

4. The unit of claim 1 wherein said movable means is a torsion spring having one end pivotally connected to the guide arm and the opposite end pivotally connected to the inner door section.

5. The unit of claim 1 wherein said guide arm carries a slidable guide member adjacent said opposite end, and said means for controlling movement of said opposite end of the guide arm includes a slotted channel, said guide member being disposed in said channel for slidable movement therein.

6. The unit of claim 1 wherein said movable means is a link member connected to and extending between said guide arm and said inner door.

7. The unit of claim 1 wherein said movable means includes a resilient member.

8. The unit of claim 1 wherein said guide arm is angled and is pivotally connected at one end to a bracket carried by the upper edge of the outer door section.

9. A hardware assembly adapted for controlling movement of a bi-fold door unit between a fully opened position and a fully closed position and including at least an inner door section adapted to be hinged to a door frame and an outer door section adapted for hinged movement relative to the inner door section, said assembly comprising a movable door guide arm having means at one end for pivotal connection to the outer door section for movement with the outer door section to control movement of the leading edge of the outer door section along a predetermined path as the door sections are moved between opened and closed positions, means carried by said guide arm at one end for controlling pivotal movement of the opposite end of the guide arm along a predetermined rectilinear path defined by a slot of a channel member disposed in a horizontal plane extending parallel to and above the horizontal plane in which the guide arm is disposed during movement of said door sections between said positions, and moveable means carried by the guide arm and having pivoting means at its opposite end for pivotal connection to the inner door section for applying tension to said door sections when the door sections are in predetermined positions relative to each other.

10. The assembly of claim 9 wherein said movable means is a torsion spring having one end pivotally connected to the guide arm and the opposite end adapted for pivotal connection to the inner door section.

11. The assembly of claim 9 wherein said guide arm carries a slidable guide member adjacent said opposite end and said means for controlling movement of said opposite end of the guide arm includes a slotted channel, and said guide member is disposed in said channel for slidable movement therein.

12. The assembly of claim 11 wherein said movable means is a torsion spring having one end pivotally connected to the guide arm and the opposite end thereof including means for pivotal connection of the guide arm to the inner door section.

13. The assembly of claim 9 wherein said movable means forms a link between said guide arm and said inner door.

14. The assembly of claim 9 wherein said movable means includes a resilient member.

15. A bi-fold door unit including at least an inner door section adapted to be hinged to a door frame in the opening thereof and an outer door section hinged to the inner door section for movement relative thereto in said opening, a movable door guide arm having adjacent one end thereof a pivotal connection to said outer door section for controlling the movement of the leading edge of the outer door section along a predetermined path as said door sections are moved between opened and closed positions located approximately 180 degrees apart, means connected to said guide arm for controlling movement of the opposite end of the guide arm along a predetermined rectilinear path during movement of said door sections between said positions, and movable means carried between and operably connected to said guide arm and said inner door section for applying tension to said door sections when the door sections are in predetermined positions relative to each other, said movable means being automatically actuatable to apply said tension only when the adjacent hinged ends of said door sections are located less than 90 degrees from either said opened or closed positions of said door sections.

16. A bi-fold door unit including at least an inner door section adapted to be hinged to a door frame in the opening thereof and an outer door section hinged to the inner door section for movement relative thereto in said opening, a movable door guide arm having adjacent one end thereof a pivotal connection to said outer door section for controlling the movement of the leading edge of the outer door section along a predetermined path as said door sections are moved between opened and closed positions, a slideable guide member carried by the guide arm adjacent its opposite end, means for controlling movement of said opposite end of the guide arm including a slotted channel, said slidable guide member being disposed in said channel for slideable movement therein, said means controlling movement of said opposite end of the guide arm along a predetermined rectilinear path during movement of said door sections between said positions, and movable means connected to and carried between said guide arm and the inner door section for applying tension to said door sections when the door sections are in predetermined positions relative to each other, said movable means including a torsion spring having one end pivotally connected to the guide arm and its opposite end pivotally connected to the inner door section.

17. The assembly of claim 12 wherein said means for pivotal connection of the guide arm to the inner door section is located adjacent one end of said guide arm for pivotal connection of the guide arm to a bracket carried by an edge of the inner door section.

References Cited by the Examiner

UNITED STATES PATENTS

674,678	5/01	Geran	16—80
1,381,744	6/21	Riggs	160—199
1,481,239	1/24	Folland	160—199
1,528,267	3/25	Rott	16—73
1,986,178	1/35	Ainsworth	160—199
2,667,221	1/54	Terry et al.	160—188
2,725,099	11/55	Fries	160—188

HARRISON R. MOSELEY, *Primary Examiner.*