(12) INTERNATIONAL APPLICATION PUBLISHED UNDER THE PATENT COOPERATION TREATY (PCT)

(19) World Intellectual Property Organization
International Bureau

(43) International Publication Date
10 May 2012 (10.05.2012)

PCT

(10) International Publication Number
WO 2012/058751 A1

(51) **International Patent Classification**:
F16K 17/04 (2006.01) ***F16K 3/34*** (2006.01)
F01M 1/02 (2006.01) ***F16N 23/00*** (2006.01)
F16K 17/08 (2006.01)

(21) **International Application Number**:
PCT/CA2011/001204

(22) **International Filing Date**:
28 October 2011 (28.10.2011)

(25) **Filing Language**: English

(26) **Publication Language**: English

(30) **Priority Data**:
61/408,761 1 November 2010 (01.11.2010) US

(71) **Applicant** *(for all designated States except US)*: **MAGNA POWERTRAIN INC.** [CA/CA]; 50 Casmir Court, Concord, Ontario L4K 4J5 (CA).

(72) **Inventors; and**
(75) **Inventors/Applicants** *(for US only)*: **WILLIAMSON, Matthew** [CA/CA]; 243 Weldrick Road West, Richmond Hill, Ontario L4C 5J2 (CA). **GANESAN, Karthikeyan** [CA/CA]; 225 Vanhorne Ave., Apt.# 910, North York, Ontario M2J 2T9 (CA).

(74) **Agents**: **PORAT, Alex** et al.; Magna International Inc., 337 Magna Drive, Aurora, Ontario L4G 7K1 (CA).

(81) **Designated States** *(unless otherwise indicated, for every kind of national protection available)*: AE, AG, AL, AM, AO, AT, AU, AZ, BA, BB, BG, BH, BR, BW, BY, BZ, CA, CH, CL, CN, CO, CR, CU, CZ, DE, DK, DM, DO, DZ, EC, EE, EG, ES, FI, GB, GD, GE, GH, GM, GT, HN, HR, HU, ID, IL, IN, IS, JP, KE, KG, KM, KN, KP, KR, KZ, LA, LC, LK, LR, LS, LT, LU, LY, MA, MD, ME, MG, MK, MN, MW, MX, MY, MZ, NA, NG, NI, NO, NZ, OM, PE, PG, PH, PL, PT, QA, RO, RS, RU, RW, SC, SD, SE, SG, SK, SL, SM, ST, SV, SY, TH, TJ, TM, TN, TR, TT, TZ, UA, UG, US, UZ, VC, VN, ZA, ZM, ZW.

(84) **Designated States** *(unless otherwise indicated, for every kind of regional protection available)*: ARIPO (BW, GH, GM, KE, LR, LS, MW, MZ, NA, RW, SD, SL, SZ, TZ, UG, ZM, ZW), Eurasian (AM, AZ, BY, KG, KZ, MD, RU, TJ, TM), European (AL, AT, BE, BG, CH, CY, CZ, DE, DK, EE, ES, FI, FR, GB, GR, HR, HU, IE, IS, IT, LT, LU, LV, MC, MK, MT, NL, NO, PL, PT, RO, RS, SE, SI, SK, SM, TR), OAPI (BF, BJ, CF, CG, CI, CM, GA, GN, GQ, GW, ML, MR, NE, SN, TD, TG).

Published:

— *with international search report (Art. 21(3))*

(54) **Title**: PRESSURE RELIEF VALVE WITH ORIFICE

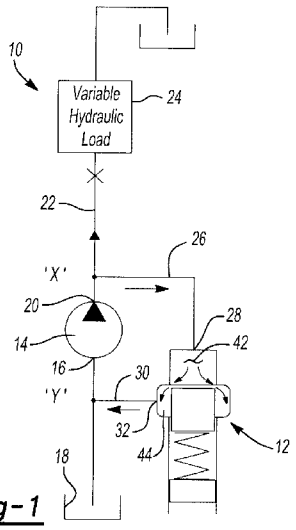

Fig-1

(57) **Abstract**: A pressure relief valve includes a housing including an inlet chamber adapted to be in communication with an outlet of a pump and an outlet chamber adapted to be in communication with a pump inlet. The housing includes a bore having a first end in communication with the inlet chamber and a main spill aperture in communication with the bore and the outlet chamber. A piston includes an orifice and an axially spaced apart aperture. The piston is axially moveable within the bore between a first position whereat the piston seals the inlet chamber from the outlet chamber, a second position whereat the inlet and outlet chambers are in fluid communication with one another via only the orifice, and a third position whereat the inlet and outlet chambers are in fluid communication with one another via the orifice and the aperture. A spring biases the piston toward the first position.

WO 2012/058751 A1

PRESSURE RELIEF VALVE WITH ORIFICE

CROSS-REFERENCE TO RELATED APPLICATIONS

[0001] This application claims the benefit of U.S. Provisional Application No. 61/408,761, filed on November 1, 2010. The entire disclosure of the above application is incorporated herein by reference.

FIELD

[0002] The present disclosure relates to pressure relief valves for pumps. More specifically, a pressure relief valve includes multiple axially spaced apart outlet ports to provide reduced pump output at low to moderate operating speeds.

BACKGROUND

[0003] Fluid displacement pumps provide fluid at a volume flow rate that is proportional to the rotational speed of a pump input member. The fluid volume pumped per input member revolution is substantially constant. As such, the pump outputs a relatively high volume flow rate when the rotational speed of the pump input member is high. Depending on the application of the pump, an output volume flow rate greater than a desired flow rate may be provided.

[0004] In particular, many internal combustion engines are equipped with lubrication pumps to provide pressurized lubricant to one or more moving components. Typical lubrication pumps are sized to provide a maximum output pressure at a predetermined operating speed. Many vehicle engines are rarely operated at maximum speed where maximum pump output is required. The engine frequently operates at lower rotational speeds. At the lower engine speeds, the pump output may be greater than required. A higher output pressure is maintained than necessary. An inefficient conversion of energy to heat may result thereby reducing the efficiency of the engine and pump combination. While many lubrication pumps are equipped with a pressure relief valve to assure that a maximum pressure within the lubrication system is not exceeded, these simple systems do not address the need for a reduced pump output at low to moderate engine operating speeds.

[0005] Some engine lubrication systems attempt to include components to reduce the pump output in the low to moderate engine speed range of operation. The previously known arrangements, however, may include high cost solutions incorporating multiple relief valves, solenoids and other control hardware. As such, it may be beneficial to provide a simplified pressure relief valve for increasing the energy efficiency of a pump.

SUMMARY

[0006] This section provides a general summary of the disclosure, and is not a comprehensive disclosure of its full scope or all of its features.

[0007] A pressure relief valve includes a housing including an inlet chamber adapted to be in communication with an outlet of a pump and an outlet chamber adapted to be in communication with a pump inlet. The housing includes a bore having a first end in communication with the inlet chamber and a main spill aperture in communication with the bore and the outlet chamber. A piston includes an orifice and an axially spaced apart aperture. The piston is axially moveable within the bore between a first position whereat the piston seals the inlet chamber from the outlet chamber, a second position whereat the inlet and outlet chambers are in fluid communication with one another via only the orifice, and a third position whereat the inlet and outlet chambers are in fluid communication with one another via the orifice and the aperture. A spring biases the piston toward the first position.

[0008] A pressure relief valve comprises a housing including an inlet chamber and an outlet chamber. The housing includes a bore having a first end in communication with the inlet chamber, an orifice in communication with the outlet chamber, and a main spill aperture axially spaced apart from the orifice and in communication with the outlet chamber. A piston is axially moveable within the bore between a first position whereat the piston seals the inlet chamber from the outlet chamber, a second position whereat the inlet and outlet chambers are in fluid communication with one another via only the orifice, and a third position whereat the inlet and outlet chambers are in fluid communication with one another via the orifice and the main spill aperture. A spring biases the piston toward the first position.

[0009] Further areas of applicability will become apparent from the description provided herein. The description and specific examples in this summary are intended for purposes of illustration only and are not intended to limit the scope of the present disclosure.

DRAWINGS

[0010] The drawings described herein are for illustrative purposes only of selected embodiments and not all possible implementations, and are not intended to limit the scope of the present disclosure.

[0011] Figure 1 is a schematic of a fluid pumping system equipped with a pressure relief valve constructed in accordance with the teachings of the present disclosure;

[0012] Figure 2 is a fragmentary plan view of the pressure relief valve schematically depicted in Figure 1;

[0013] Figure 3 is a fragmentary cross-sectional view of the pressure relief valve shown in Figure 2;

[0014] Figures 4a through 4e provide fragmentary cross-sectional side views of a pressure relief valve having a piston axially translated at different positions;

[0015] Figure 5 is a graph depicting a discharge pressure versus pump speed relationship for a pump having a fixed hydraulic load resistance;

[0016] Figure 6 is a graph depicting a discharge pressure versus discharge flow relationship for a pump operating a fixed speed with an increasing hydraulic load resistance;

[0017] Figure 7 is a graph depicting a discharge pressure versus pump speed for a standard pressure relief valve compared to a pressure relief valve equipped with an axially offset orifice;

[0018] Figure 8 is a graph depicting a discharge pressure versus discharge flow providing the same comparison as Figure 7;

[0019] Figure 9 is a fragmentary view of another pressure relief valve;

[0020] Figure 10 is a fragmentary cross-sectional view of the pressure relief valve depicted in Figure 9;

[0021] Figure 11 is a graph showing discharge pressure versus discharge flow for similar pressure relief valves having multiple orifices;

[0022] Figure 12 is a discharge pressure versus discharge flow graph;

[0023] Figure 13 is a fragmentary view depicting a portion of a pressure relief valve;

[0024] Figure 14 is another discharge pressure versus discharge flow graph;

[0025] Figure 15 is a fragmentary view of a pressure relief valve providing a performance curve shown in Figure 14;

[0026] Figures 16-22 are fragmentary views of different pressure relief valves having varying orifice configurations;

[0027] Figures 23-26 are fragmentary views of different pressure relief valves having alternative main spill aperture shapes;

[0028] Figure 27 is a fragmentary cross-sectional view of another pressure relief valve;

[0029] Figure 28 is a sectional fragmentary perspective view of a pump equipped with a pressure relief valve;

[0030] Figure 29 is a fragmentary sectional view of an alternate pressure relief valve; and

[0031] Figure 30 is a cross-sectional view of an alternate piston.

[0032] Corresponding reference numerals indicate corresponding parts throughout the several views of the drawings.

DETAILED DESCRIPTION

[0033] Example embodiments will now be described more fully with reference to the accompanying drawings.

[0034] Figure 1 is a schematic depicting an exemplary fluid pumping system 10 including a pressure relief valve 12 constructed in accordance with the teachings of the present disclosure. Fluid pumping system 10 includes a pump 14 depicted as a fixed displacement pump. It should be appreciated that pump 14 may also be a variable displacement pump without departing from the scope of the present disclosure. Pump 14 includes an inlet 16 in fluid communication with a fluid reservoir 18. Pump 14 also includes an outlet 20

providing pressurized fluid to a passageway or line 22 and a hydraulic load 24. The hydraulic load may include lubrication passageways associated with moving components of an engine (not shown) such as a valve train. Once the fluid has been transferred to hydraulic load 24, the fluid returns to fluid reservoir 18.

[0035] Fluid pumping system 10 also includes a passageway or line 26 providing pressurized fluid from outlet 20 to an inlet 28 of pressure relief valve 12. A return passageway 30 interconnects an outlet 32 of pressure relief valve 12 with inlet 16.

[0036] Pressure relief valve 12 may be integrally formed with pump 14 and positioned within a common housing 40 as shown in Figure 2. Housing 40 includes an inlet chamber 42 in communication with inlet 28 and an outlet chamber 44 in communication with outlet 32. Valve 12 includes a stepped bore 46 in housing 40 in which a piston 48 and a spring 50 are arranged. A plug 52 is threadingly engaged with housing 40 to cap or seal bore 46 and trap piston 48 and spring 50 within housing 40. It should be appreciated that plug 52 may alternatively be positioned at the opposite end of bore 46 and that the end of bore 46 containing plug 52 would become a blind bore and not extend through an end face 54 of housing 40.

[0037] Stepped bore 46 includes an enlarged diameter portion 56 including an internal thread in receipt of plug 52. An adjacent reduced diameter portion 58 is in slidable receipt of piston 48. Stepped bore 46 also includes a further reduced diameter portion 59 interconnecting inlet chamber 42 and the portion 58. A stop face 60 is formed at one end of bore portion 58. Piston 48 includes an end face 64 that is biased into engagement with stop face 60 by spring 50 when valve 12 is closed. A wall 66 separates bore portion 58 from outlet chamber 44. A vent or dampening aperture 68 extends through wall 66 to place bore 46 in fluid communication with outlet chamber 44. Vent 68 prevents hydraulic lock of piston 48 allowing the piston to axially translate within bore 46.

[0038] Housing 40 includes an orifice 70 and a main spill aperture 72 axially spaced apart from one another with reference to an axis of translation 74 of piston 48. Each of orifice 70 and main spill aperture 72 interconnect portion 58 with outlet chamber 44. A land 76 is a portion of wall 66 that is uninterrupted

and axially positioned between a trailing edge 77 of orifice 70 and a leading edge 79 of main spill aperture 72.

[0039] Piston 48 is a substantially circular cylindrical member including an outer cylindrical surface 80 that is sized to closely meet with portion 58. Piston 48 includes a blind bore 82 in receipt of a portion of spring 50. Blind bore 82 includes a cylindrical surface 84 and an end surface 86. One end of spring 50 engages end surface 86 while an opposite end of spring 50 is positioned within a pocket 88 of plug 52.

[0040] Figures 4a - 4e are useful to explain the operation of pressure relief valve 12. Figure 5 represents a discharge pressure versus speed relationship obtained when pump 14 is operated with a fixed hydraulic load resistance placed in lieu of the variable hydraulic load 24 shown in Figure 1. Figure 6 represents a discharge pressure versus discharge flow relationship when pump 14 is operated at a constant speed and the hydraulic load 24 is varied from substantially no load at point 1 to a simulated dead-head condition at point 5.

[0041] Each of the numerals 1-5 in Figures 5 and 6 relate to different axial positions of piston 48 as depicted in Figures 4a - 4e. In particular, Figure 4a shows piston 48 at position 1 where end face 64 engages stop face 60 and valve 12 is closed. No fluid flows from inlet chamber 42 to outlet chamber 44. Position 2 is depicted in Figure 4b. In Figure 4b, piston 48 is axially displaced to the threshold or uppermost edge of orifice 70. Flow does not occur between inlet chamber 42 and outlet chamber 44 when piston 48 is located at position 2. With reference to Figures 5 and 6, pressure increases during pump operation as piston 48 travels from position 1 to position 2 due to an increase in pump speed and/or an increase in the hydraulic load resistance within system 10. The discharge pressure continues to increase until a sufficient pressure is generated to overcome the force provided by spring 50 at its closed position plus the increased force to axially translate piston 48 from position 1 to position 2.

[0042] As discharge pressure continues to increase, piston 48 moves from position 2 to position 3. At this time, pressurized fluid from inlet chamber 42 passes through orifice 70 into outlet chamber 44. Piston 48 continues to axially

translate to position 3 at which orifice 70 is fully open. By reviewing Figure 5, it should be appreciated that the provision of orifice 70 substantially modifies the shape of the curve by reducing the increase in discharge pressure per increase of pump speed.

[0043] As pump speed or hydraulic load continues to increase, piston 48 continues to axially travel from position 3 toward position 4. During this portion of travel, the pressure of fluid acting on end face 64 increases to overcome the increasing load provided by spring 50 due to further compression of the spring. At position 4, as shown in Figure 4d, piston 48 is positioned at the threshold of main spill aperture 72. At position 4, fluid continues to flow through orifice 70 but does not flow through main spill aperture 72. When hydraulic load and/or pump speed continue to increase, piston 48 travels from position 4 to position 5. During this portion of piston travel, fluid travels from inlet chamber 42 to outlet chamber 44 through both orifice 70 and main spill aperture 72. The rate of increase in discharge pressure per increase in pump speed or increase in hydraulic load is once again substantially reduced. This reduced rate of discharge pressure increase is depicted in both Figures 5 and 6 as the line segment between position 4 and position 5.

[0044] Figures 7 and 8 compare the curves of Figures 5 and 6 with traces representing standard pressure relief valve operation. In Figure 7, the lower trace 100 represents a discharge pressure versus pump speed trace for a system equipped with pressure relief valve 12. Trace 102 relates to discharge pressure versus pump speed for a typical pressure relief valve having a main spill way but without an axially spaced orifice. Figure 8 shows a discharge pressure versus discharge flow trace 104 corresponding to the operation of pressure relief valve 12. A trace 106 represents the operation of the same standard pressure relief valve associated with trace 102 shown in Figure 7. The shaded area between the curves represents an amount of energy saved due to reducing the pressure generated by pump 14 through the use of pressure relief valve 12. As is shown in Figures 7 and 8, the reduction in pressure at low to moderate engine and pump operating speeds may be substantial. A corresponding substantial energy savings may be realized.

[0045] Figures 9 and 10 depict another pressure relief valve identified at reference numeral 112. Valve 112 is substantially similar to valve 12 with the exception that three orifices 170a, 170b and 170c extend through wall 166 instead of singular orifice 70 shown in Figure 2. Accordingly, the remaining features of relief valve 112 will be identified with like numerals increased by 100.

[0046] Orifices 170a, 170b and 170c each have the same shape and diameter and are positioned adjacent one another at a common axial distance from stop face 160. Figure 11 depicts the change in the discharge pressure versus discharge flow relationship due to the addition of not only a singular orifice but each additional orifice such as 170a, 170b and 170c. In particular, the discharge pressure versus discharge flow trace 106 represents the output characteristics of a system equipped with the standard pressure relief valve having no axially offset orifice. Trace 104 relates to a singular orifice. A trace 203 defines the discharge pressure versus discharge flow relationship for a valve equipped with two orifices aligned along a common transverse axis. Trace 205 relates to the discharge pressure versus discharge flow characteristics of pressure relief valve 112 having three orifices 170a, 170b, 170c positioned as shown in Figures 9 and 10.

[0047] Multiple orifices may be used to shape the performance curve as desired. The size, shape and axial position of individual orifices may be varied to tailor the performance characteristics of the pressure relief valve. Figure 12 displays trace 104 with portions of the trace being identified with letters A, B and C. By changing geometrical aspects of the pressure relief valve, characteristics of the discharge pressure versus discharge flow curve may be adjusted. To vary dimension A on the discharge pressure versus discharge flow curve, the total orifice area may be changed. As previously shown in Figure 11, distance A varies by adding orifices 170a, 170b and 170c. Characteristic dimension B may be varied by changing dimension D shown in Figure 13 and/or varying the rate of spring 150. Discharge pressure versus discharge flow characteristic C may be modified by adjusting dimension E as shown in Figure 13 and/or varying the rate of spring 150.

[0048] Figures 14 and 15 relate to another pressure relief valve 212 that is substantially similar to valve 12 and valve 112. Valve 212 includes a first orifice 270a, a second orifice 270b and a third orifice 270c. First orifice 270a includes a greater diameter than orifices 270b, 270c. Furthermore, orifice 270a is positioned a first axial distance from a leading edge 279 of main spill aperture 272. Second orifice 270b is closer to edge 279 while orifice 270c is positioned even closer to leading edge 279 of main spill aperture 272. The diameters of the orifices also reduce in size from first orifice 270a being largest and third orifice 270c being the smallest. Figure 14 depicts how this arrangement once again varies the discharge pressure versus discharge flow trace.

[0049] Figures 16-18 provide examples of other pressure relief valves 312, 412 and 512, respectively, having multiple circular orifices positioned in staggered axial locations. Valve 312 is equipped with orifices 370a, 370b, 370c and 370d, being commonly sized and positioned at different axial locations. Figure 17 shows valve 412 having orifices 470a - 470h. Figure 18 relates to valve 512 having orifices 570a, 570b and 570c. Orifice 570b has a larger diameter than orifices 570a and 570c.

[0050] Figures 19-22 depict pressure relief valves 612, 712, 812 and 912, respectively. These valves include orifices having non-circular aperture shapes. In particular, valve 612 includes an elongated slot-like orifice 670. Valve 712 includes a hat-shaped orifice 770. Figure 21 depicts valve 812 having a V-shaped orifice 870. Figures 22 shows valve 912 having a first elongated vertically oriented orifice 970a positioned adjacent to a somewhat smaller elongated orifice 970b.

[0051] Figures 23-26 depict various pressure relief valves that are substantially similar to one another with the exception that the shape of the main spill aperture has been changed. In the prior Figures, the main spill aperture was shaped as a transversely oriented rectangular shape having rounded corners. Figure 23 depicts a main spill aperture 1072 having a pocket portion with an offset leading edge 1079. Figure 24 shows valve 1112 having a main spill aperture 1172 with a sloped leading edge 1179.

[0052] Pressure relief valve 1212 includes a first main spill aperture 1272a and a second main spill aperture 1272b laterally spaced apart from one another. Aperture 1272a includes an offset leading edge 1279a. Aperture 1272b includes an offset leading edge 1279b. It should be appreciated that regardless of the number of main spill apertures or their shape, land 1276 remains axially positioned between main spill apertures 1272a, 1272b and orifices 1270a and 1270b. The provision of a land is common throughout each of the variations depicted.

[0053] Figure 26 shows pressure relief valve 1312 including a circular main spill aperture 1372. By modifying the shape and axial position of main spill apertures 1072, 1172, 1272 and 1372, distance D shown in Figure 13 is varied. Feature B of Figure 12 is varied accordingly. By modifying the shape of the main spill aperture, the slope of the discharge pressure versus discharge flow trace between points 4 and 5 is varied. Changing the size, shape and axial location of the main spill aperture provides a pressure relief valve manufacturer additional options to vary the shape of the discharge pressure versus discharge flow and discharge pressure versus speed traces.

[0054] Figures 27 and 28 relate to another pressure relief valve 1412 that is substantially similar to pressure relief valve 12. According, like elements will be identified with similar numerals beginning with 1400. Pressure relief valve 1412 is integrally formed with pump 1414 and includes a modified piston 1448 having a recess 1449 formed in end face 1454 at one end of piston 1448. Recess 1449 includes a substantially cylindrical side wall 1451 intersecting an uninterrupted bottom surface 1479. A plurality of apertures 1455 are circumferentially spaced apart from one another extending through the side wall 1451 of piston 1448.

[0055] Figure 27 corresponds to axial position 5 of Figure 4e where the main spill aperture is open. In the arrangement shown in Figure 27, pressurized fluid travels from inlet chamber 1442, through orifice 1470 and into outlet chamber 1444. When piston 1448 is at position 5, another fluid pathway is open. Specifically, fluid flows from inlet chamber 1442, into recess 1449, through apertures 1455, through main spill aperture 1472 and into outlet chamber 1444.

This design allows a leading edge 1479 of main spill aperture 1472 to be positioned axially further from orifice 1470. The available space for spring 1450 is also changed due to the inclusion of a wall 1457 separating blind bore 1482 and recess 1449.

[0056] Figure 29 relates to an alternate pressure relief valve 1512 that shares some features with pressure relief valve 1412, as well as others. As such, similar elements will be identified with like numerals beginning with 1500. Pressure relief valve 1512 differs from the previously described relief valves in that housing 1540 is not equipped with an orifice such as orifice 70 of pressure relief valve 12. Housing 1540 includes an inlet chamber 1542 and an outlet chamber 1544. A main spill aperture 1572 extends through housing 1540 interconnecting inlet chamber 1542 and outlet chamber 1544.

[0057] A plug 1552 is threadingly engaged with housing 1540 to trap a spring 1550 and a piston 1548 within a bore 1546. Piston 1548 includes a plurality of apertures 1555 circumferentially spaced apart from another and extending through a side wall 1551 of piston 1548. Piston 1548 also includes a plurality of circumferentially spaced apart orifices 1600 axially spaced apart from apertures 1555.

[0058] Figure 29 depicts piston 1548 at the most retracted axial position where flow between inlet chamber 1542 and outlet chamber 1544 is blocked. As piston 1548 translates axially to the left when viewed in Figure 29, orifice 1600 will first pass an edge 1602 of main spill aperture 1572. Fluid flows from inlet chamber 1542 into a recess 1549 of piston 1548, through orifices 1600, through main spill aperture 1572 and into outlet chamber 1544.

[0059] As fluid pressure acting on piston 1548 increases, the piston continues to axially travel toward plug 1552. It should be appreciated that during this portion of the operation of valve 1512, fluid flows through orifices 1600 but not apertures 1555. The axial distance between orifices 1600 and apertures 1555 and the force provided by spring 1550 define the pressure relief valve operational characteristics. After piston 1548 translates the axial extent of a land 1604 positioned between orifice 1600 and aperture 1555, a leading edge 1606 of

aperture 1555 will pass edge 1602 to begin fluid flow through apertures 1555. Pressurized fluid flows through orifices 1600 and apertures 1555.

[0060] The operating characteristics of valve 1512 are substantially the same as valve 12 and as depicted in Figures 5 and 6. The shape of the traces may be modified in the same manner as any of the previously described valves except that any additional orifices or modifications to orifice size, shape, or axial position are provided on piston 1548 instead of housing 1540. For each of the alternate embodiments described relating to valve 1512, only one main spill aperture 1572 is provided with no orifice being formed in housing 1540. By constructing valve 1512 in this manner, a family of pressure relief valves having different characteristics may be provided by simply replacing piston 1548 with a similar piston having a different orifice and/or aperture configuration.

[0061] Figure 30 depicts an exemplary alternate piston 1548a having first orifices 1600a, second orifices 1600b and apertures 1555a axially spaced apart from one another. A common housing 1540 may be used for each of the different pressure relief valves. Reduced costs relating to the machining of housing 1540 may be realized.

[0062] The foregoing description of the embodiments has been provided for purposes of illustration and description. It is not intended to be exhaustive or to limit the disclosure. Individual elements or features of a particular embodiment are generally not limited to that particular embodiment, but, where applicable, are interchangeable and can be used in a selected embodiment, even if not specifically shown or described. The same may also be varied in many ways. Such variations are not to be regarded as a departure from the disclosure, and all such modifications are intended to be included within the scope of the disclosure.

CLAIMS

What is claimed is:

1. A pressure relief valve, comprising:

a housing including an inlet chamber adapted to be in communication with an outlet of a pump and an outlet chamber adapted to be in communication with a pump inlet, the housing including a bore having a first end in communication with the inlet chamber, and a main spill aperture in communication with the bore and the outlet chamber;

a piston including an orifice and an axially spaced apart aperture, the piston being axially moveable within the bore between a first position whereat the piston seals the inlet chamber from the outlet chamber, a second position whereat the inlet and outlet chambers are in fluid communication with one another via only the orifice, and a third position whereat the inlet and outlet chambers are in fluid communication with one another via the orifice and the aperture; and

a spring biasing the piston toward the first position.

2. The pressure relief valve of claim 1 wherein the housing includes an aperture aligned with the bore, the aperture being closed by a plug attached to the housing, the spring having one end engaging the plug and an opposite end engaging the piston.

3. The pressure relief valve of claim 2, wherein the housing includes a wall separating the bore from the outlet chamber, the main spill aperture extending through the wall.

4. The pressure relief valve of claim 1, wherein the piston includes first and second coaxially aligned recesses, the first recess being in receipt of the spring, the second recess being in communication with the inlet chamber, the orifice and the aperture transversely extending through a wall of the piston to

allow fluid to flow from the inlet chamber, through the orifice, and through the aperture when the piston is at the third position.

5. The pressure relief valve of claim 1, wherein the piston includes an additional orifice spaced apart from the orifice and in communication with the outlet chamber, the piston allowing fluid to flow through both of the orifice and the additional orifice when at the second position.

6. The pressure relief valve of claim 1, wherein the piston includes an additional orifice spaced apart from the orifice and in communication with the outlet chamber, the piston allowing fluid to flow through the another orifice but not the aperture when located at an axial position between the second and third positions.

7. The pressure relief valve of claim 6, wherein an axial distance between the orifice and the additional orifice is adjustable to vary a discharge pressure versus discharge flow relationship of the pump.

8. The pressure relief valve of claim 1, wherein the piston includes a plurality of additional orifices axially aligned with and circumferentially spaced apart from the orifice.

9. The pressure relief valve of claim 8, wherein the piston includes a plurality of additional apertures axially aligned with and circumferentially spaced apart from the aperture.

10. The pressure relief valve of claim 1, further including another piston having another orifice spaced apart from another aperture a different distance than a distance between the orifice and the aperture of the piston, the another piston replacing the piston to provide a different discharge pressure versus discharge flow relationship of the pump.

11. A pressure relief valve, comprising:

a housing including an inlet chamber adapted to be in communication with an outlet of a pump and an outlet chamber adapted to be in communication with a pump inlet, the housing including a bore having a first end in communication with the inlet chamber, an orifice in communication with the outlet chamber, and a main spill aperture axially spaced apart from the orifice and in communication with the outlet chamber;

a piston axially moveable within the bore between a first position whereat the piston seals the inlet chamber from the outlet chamber, a second position whereat the inlet and outlet chambers are in fluid communication with one another via only the orifice, and a third position whereat the inlet and outlet chambers are in fluid communication with one another via the orifice and the main spill aperture; and

a spring biasing the piston toward the first position.

12. The pressure relief valve of claim 11, wherein the housing includes an aperture aligned with the bore, the aperture being closed by a plug attached to the housing, the spring having one end engaging the plug and an opposite end engaging the piston.

13. The pressure relief valve of claim 12, wherein the housing includes a wall separating the bore from the outlet chamber, the orifice and the main spill aperture extending through the wall.

14. The pressure relief valve of claim 13, wherein the wall includes an uninterrupted land separating the orifice and the main spill aperture.

15. The pressure relief valve of claim 11, wherein the piston includes first and second coaxially aligned recesses, the first recess being in receipt of the spring, the second recess being in communication with the inlet chamber, the piston including a transversely extending aperture through which fluid flows when the piston is at the third position.

16. The pressure relief valve of claim 11, wherein the housing includes an additional orifice spaced apart from the orifice and in communication with the outlet chamber, the piston allowing fluid to flow through both of the orifice and the additional orifice when at the second position.

17. The pressure relief valve of claim 11, wherein the housing includes an additional orifice spaced apart from the orifice and in communication with the outlet chamber, the piston allowing fluid to flow through the another orifice but not the main spill aperture when located at an axial position between the second and third positions.

18. The pressure relief valve of claim 17, wherein an axial distance between the orifice and the additional orifice is adjustable to vary a discharge pressure versus discharge flow relationship of the pump.

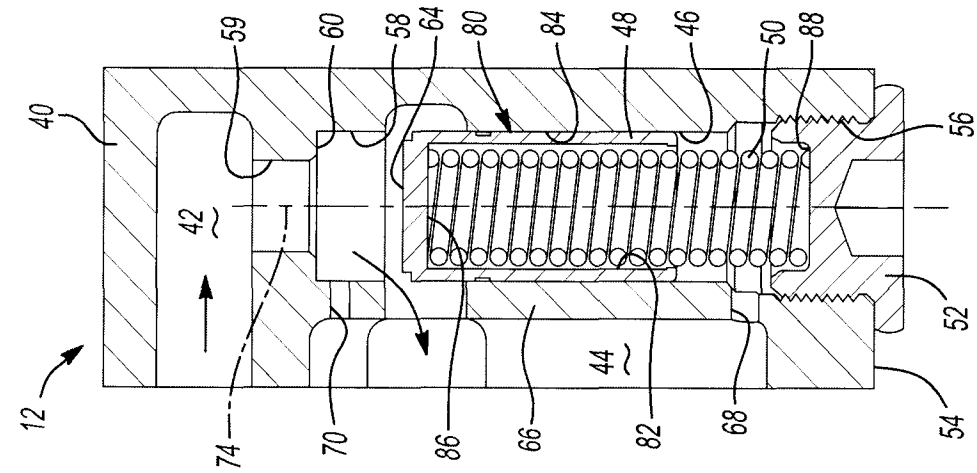

Fig-3

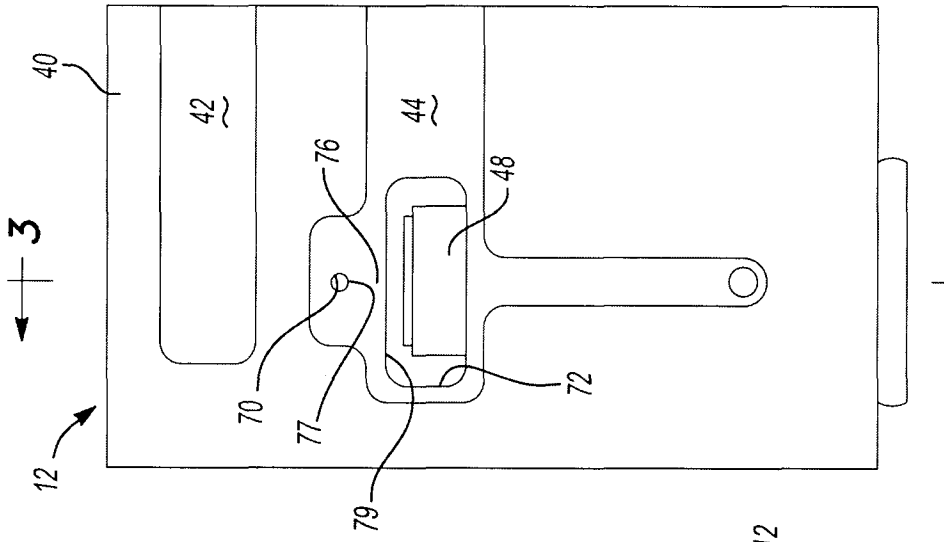

Fig-2

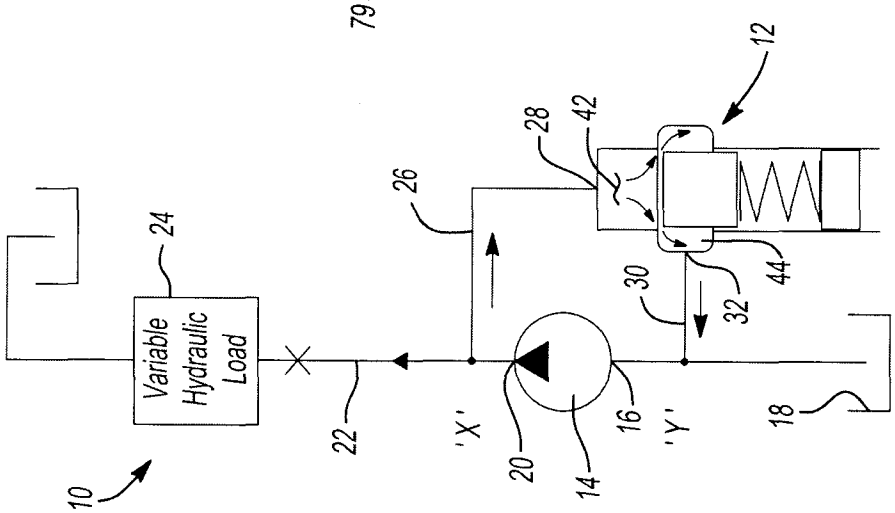

Fig-1

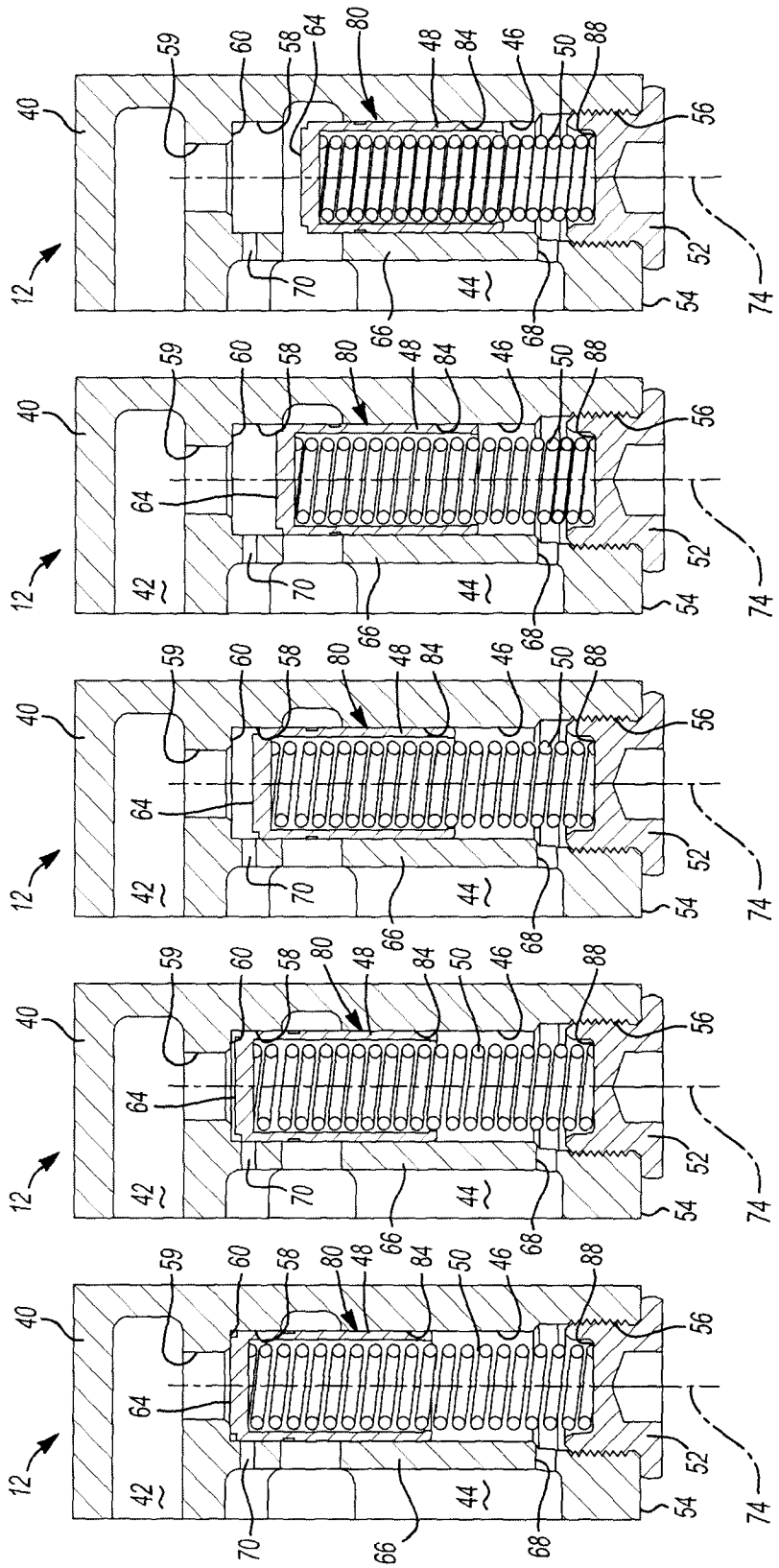

Fig-4A Fig-4B Fig-4C Fig-4D Fig-4E

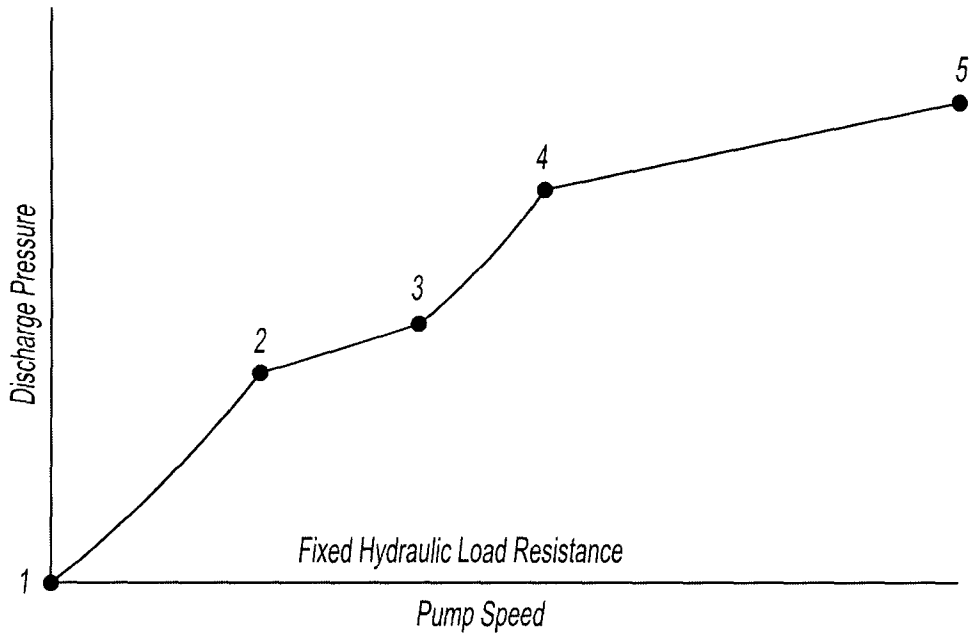
Discharge Pressure
1
2
3
4
5
Fixed Hydraulic Load Resistance
Pump Speed

Fig-5

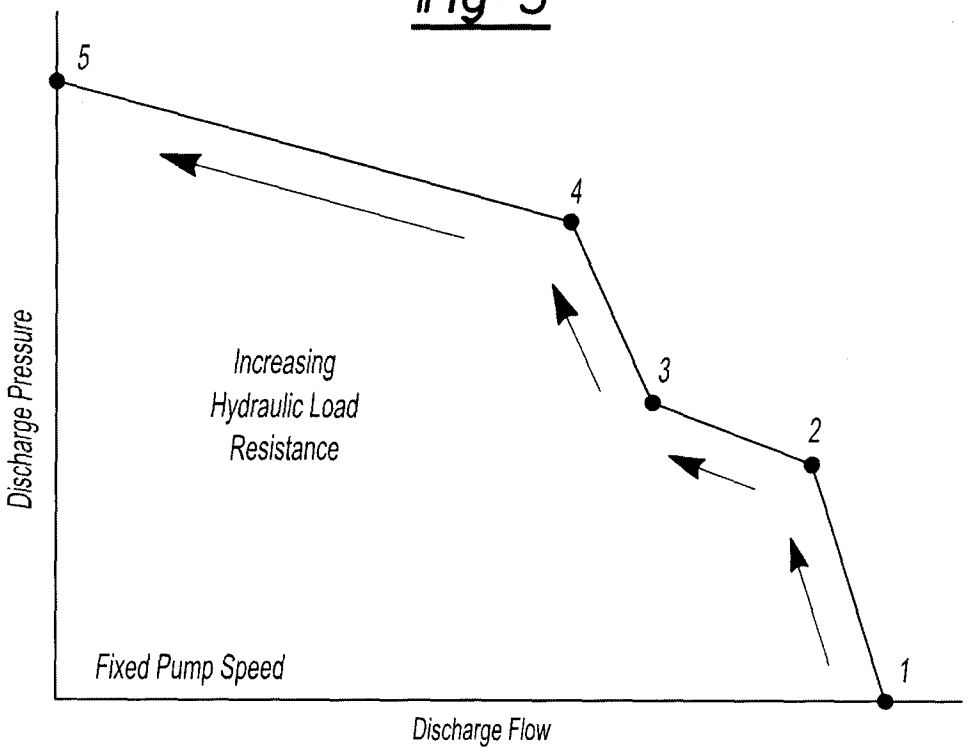
Discharge Pressure
5
4
3
2
1
Increasing
Hydraulic Load
Resistance
Fixed Pump Speed
Discharge Flow

Fig-6

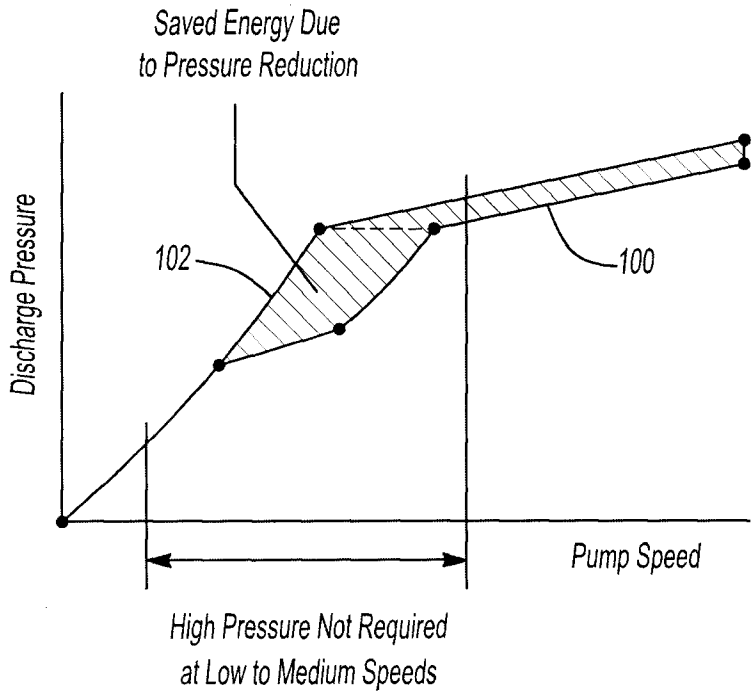
Saved Energy Due
to Pressure Reduction
Discharge Pressure
102
100
Pump Speed
High Pressure Not Required
at Low to Medium Speeds

Fig-7

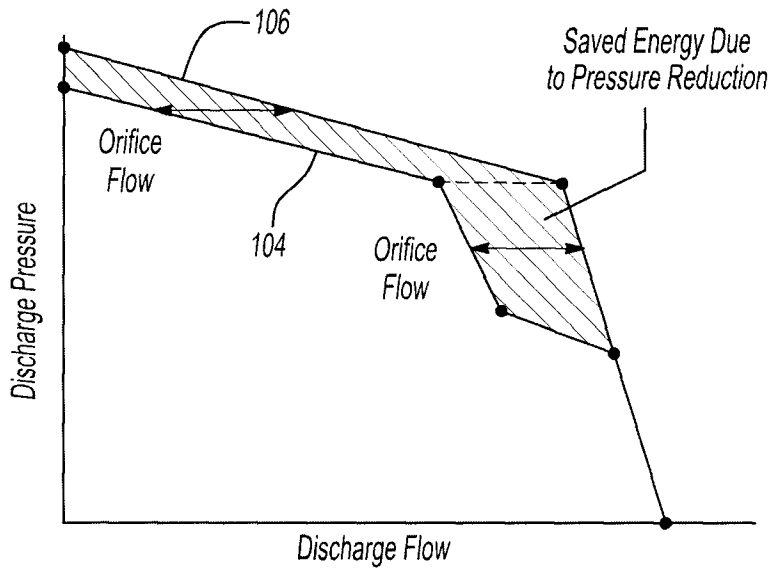
106
Saved Energy Due
to Pressure Reduction
Orifice
Flow
104
Orifice
Flow
Discharge Pressure
Discharge Flow

Fig-8

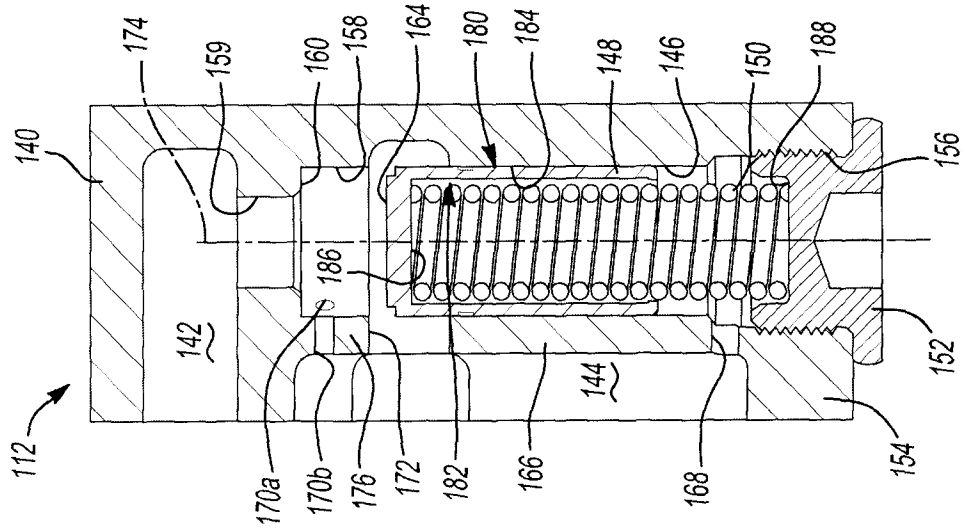
174
159
160
158
164
180
184
148
146
150
188
140
156
186
142
144
152
112
154
170a
170b
176
172
182
166
168

Fig-10

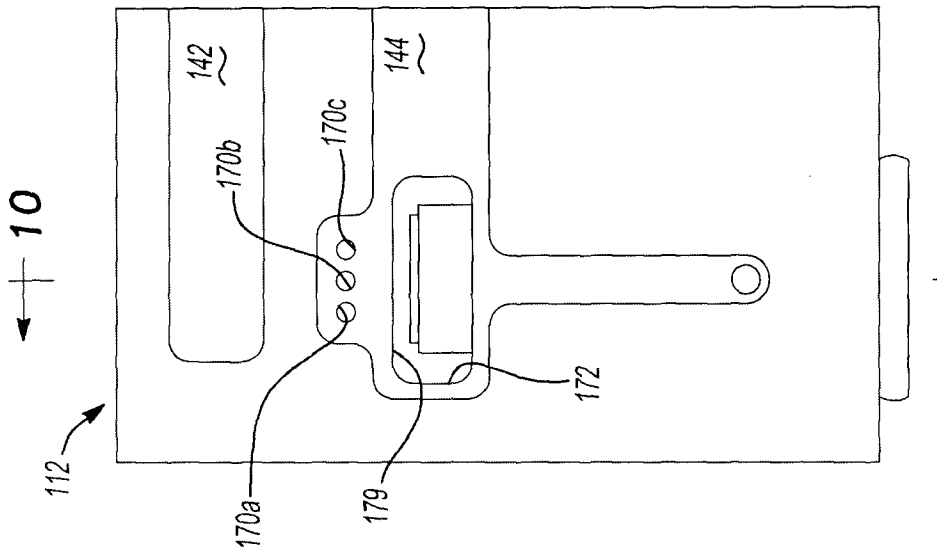
10
142
144
170b
170c
172
112
170a
179
10

Fig-9

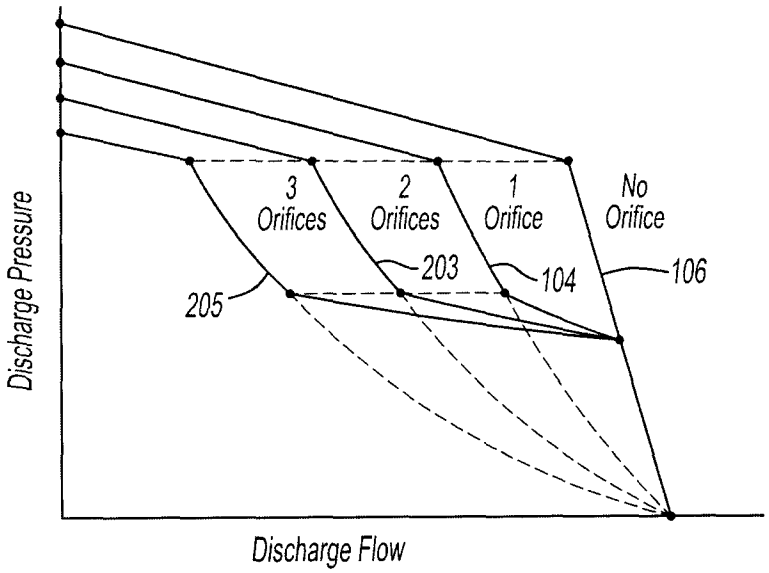
Discharge Pressure
3 Orifices
2 Orifices
1 Orifice
No Orifice
203
104
106
205
Discharge Flow

Fig-11

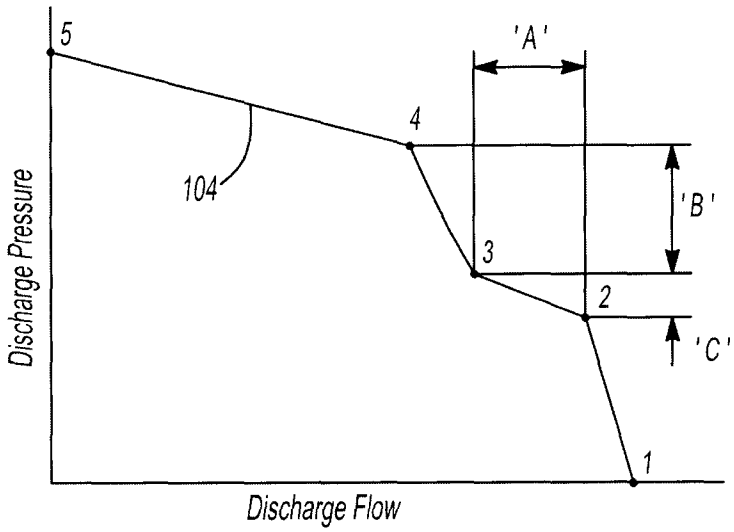
5
'A'
4
104
'B'
3
2
'C'
1
Discharge Pressure
Discharge Flow

Fig-12

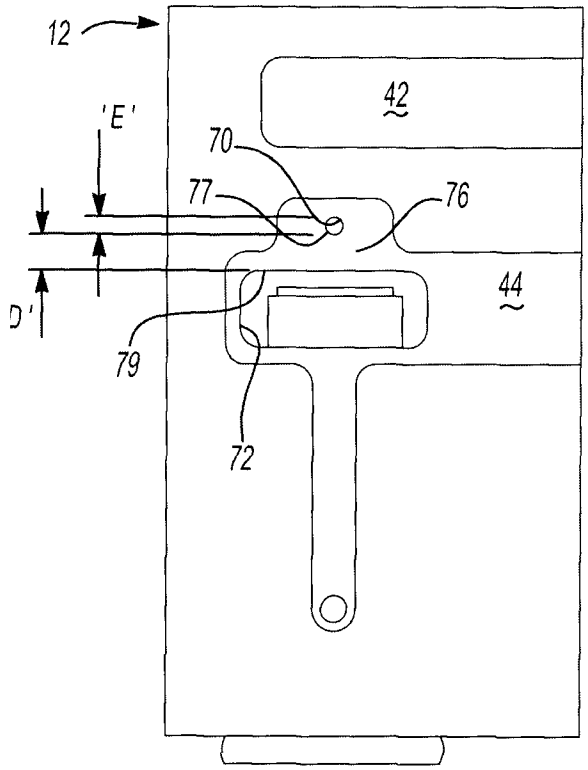
12
'E'
70
77
76
42
44
D'
79
72

Fig-13

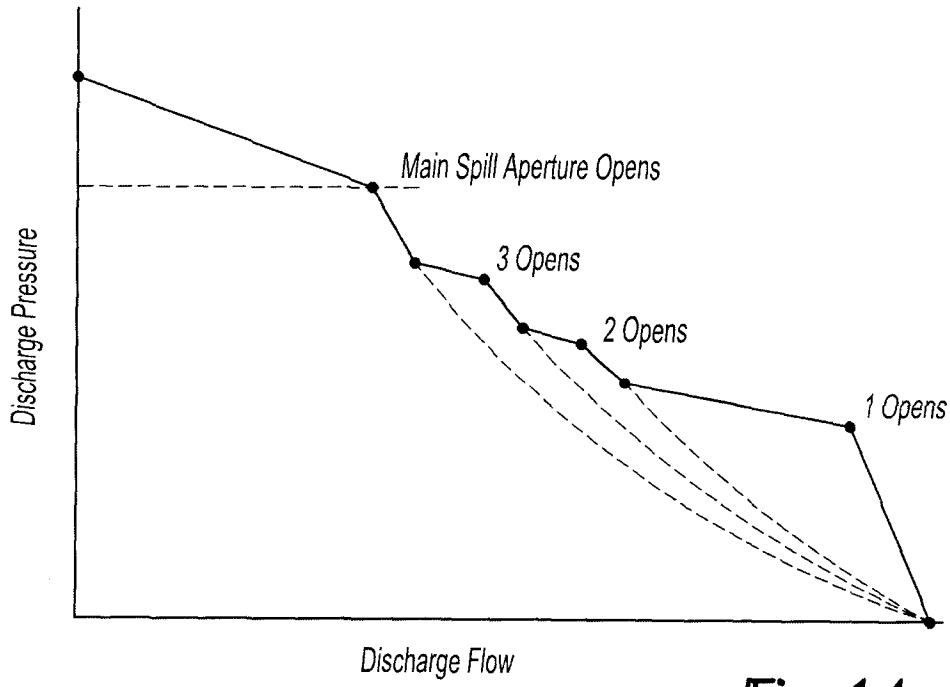
Main Spill Aperture Opens
3 Opens
2 Opens
1 Opens
Discharge Pressure
Discharge Flow

Fig-14

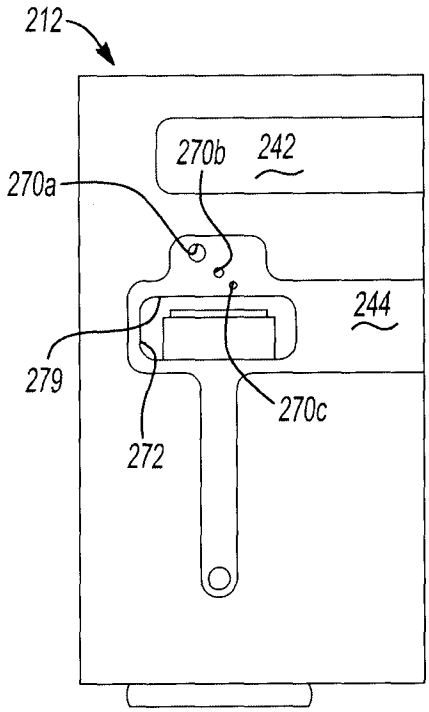

Fig-15

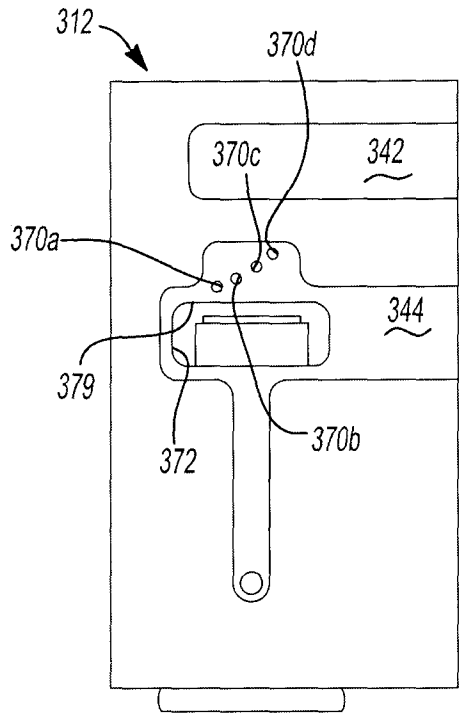

Fig-16

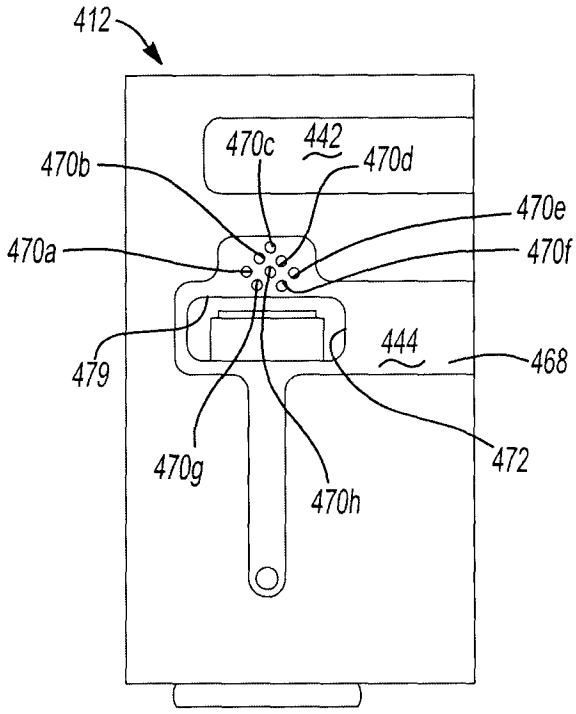

Fig-17

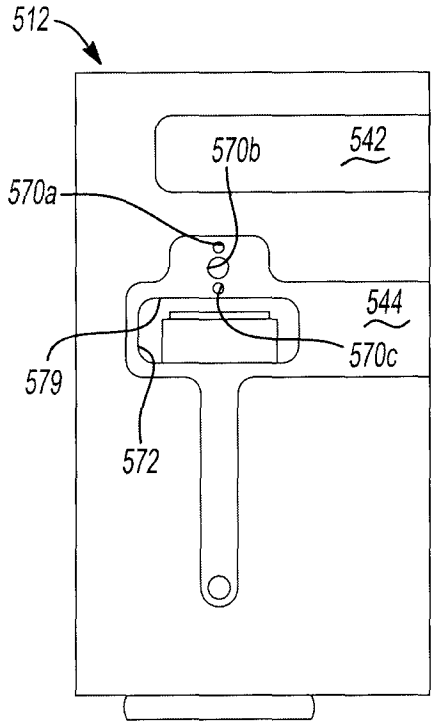

Fig-18

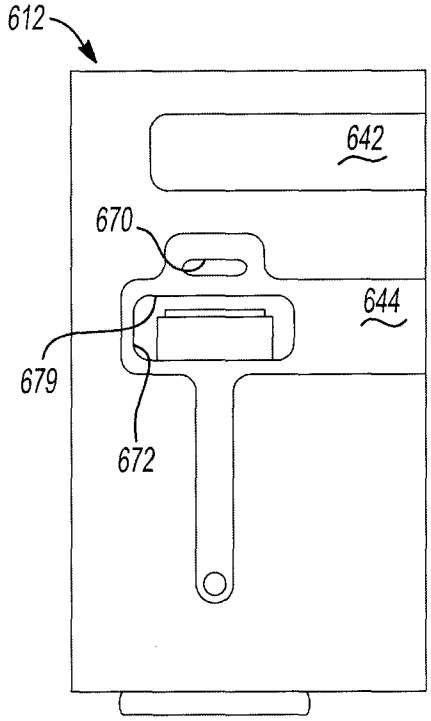

Fig-19

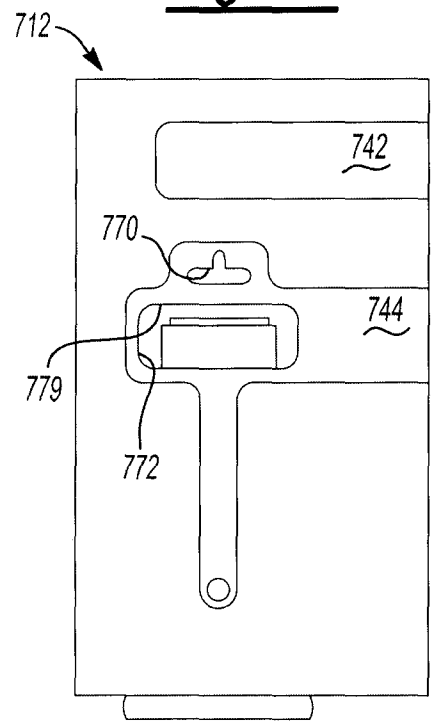

Fig-20

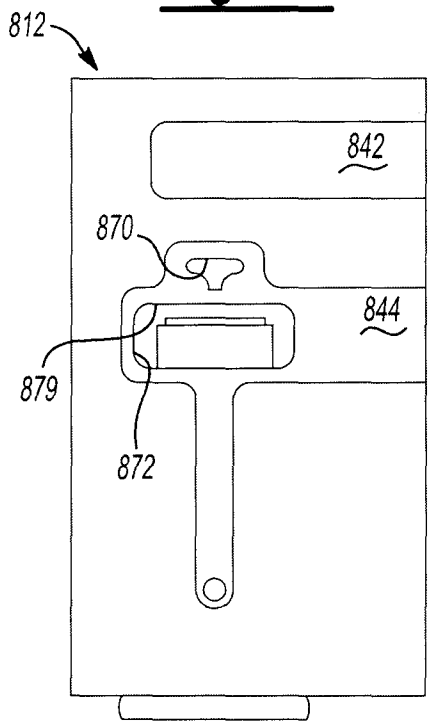

Fig-21

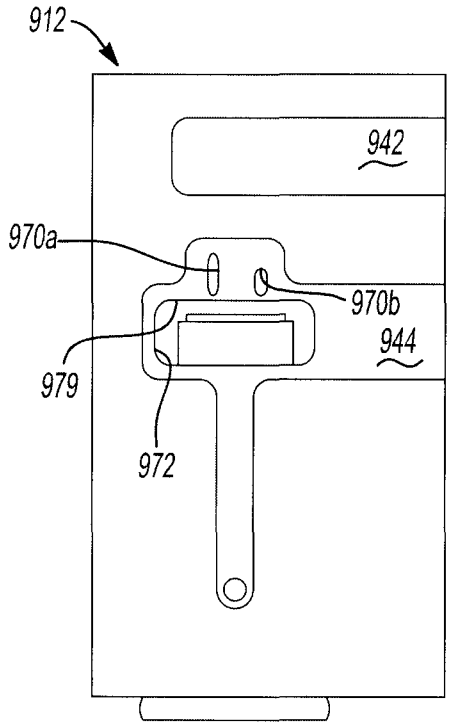

Fig-22

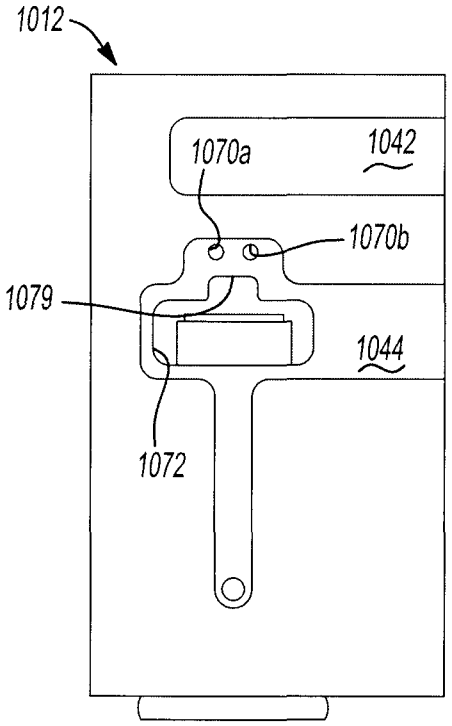

Fig-23

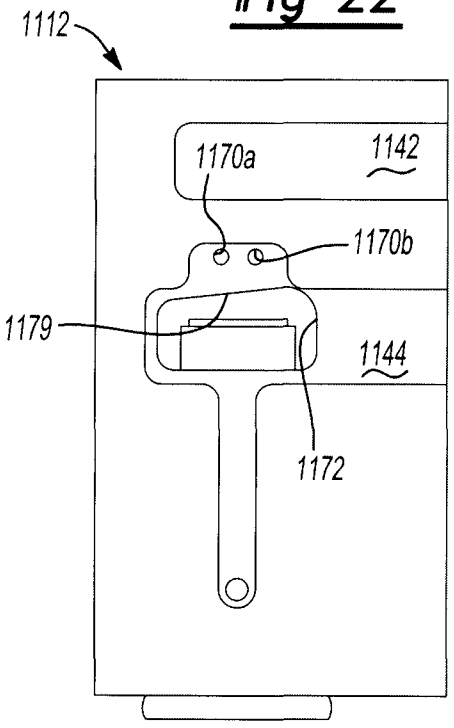

Fig-24

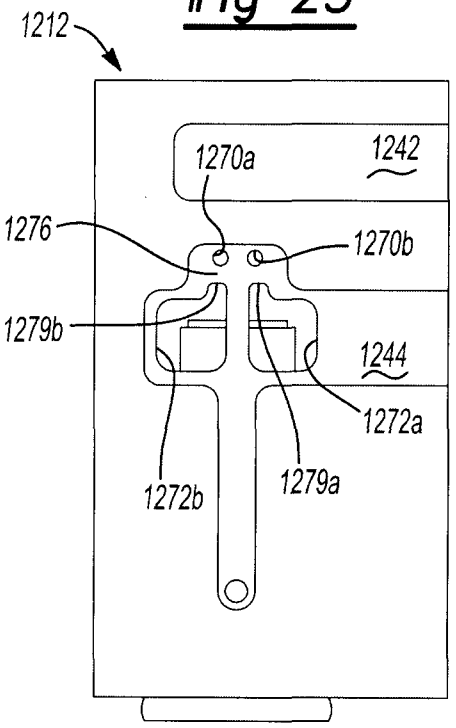

Fig-25

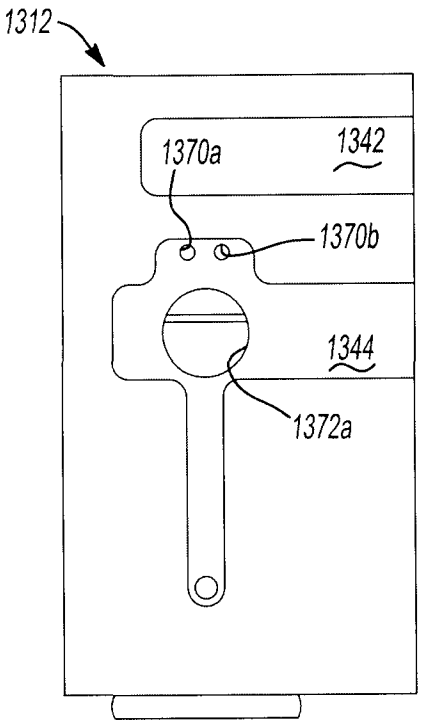
1312
1370a
1342
1370b
1344
1372a

Fig-26

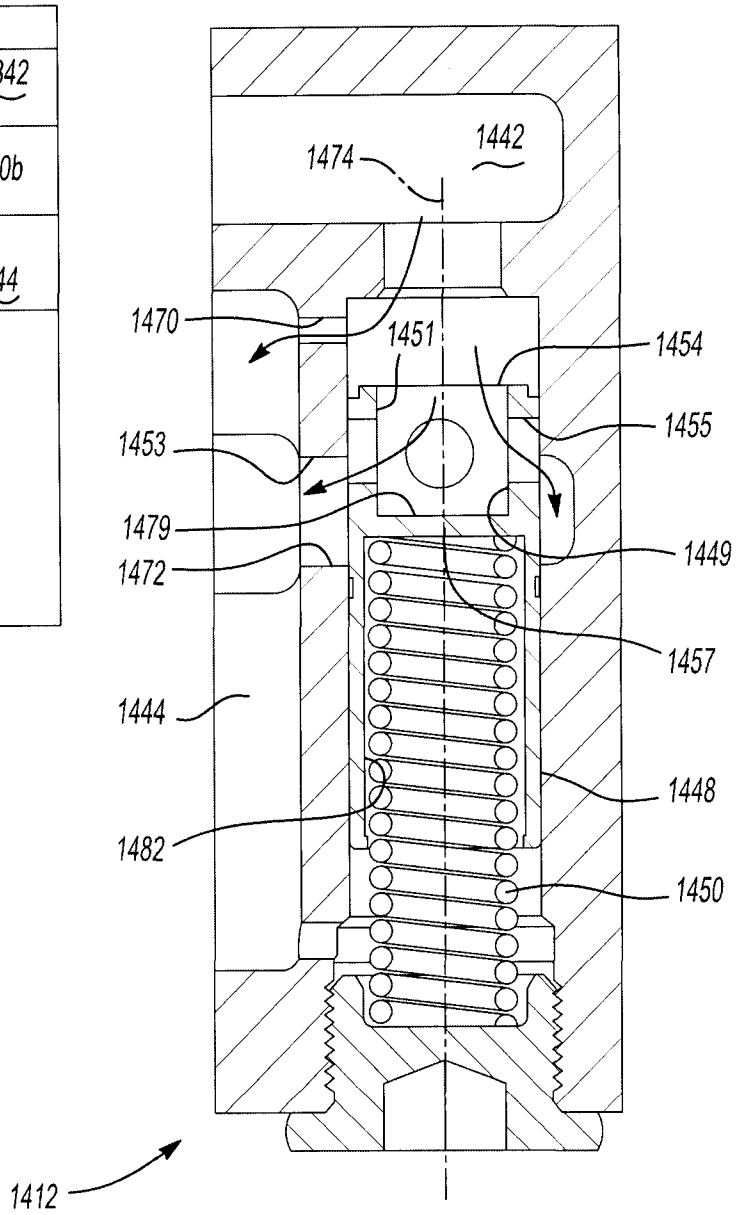
1474
1442
1470
1451
1454
1455
1453
1479
1472
1449
1457
1444
1448
1482
1450
1412

Fig-27

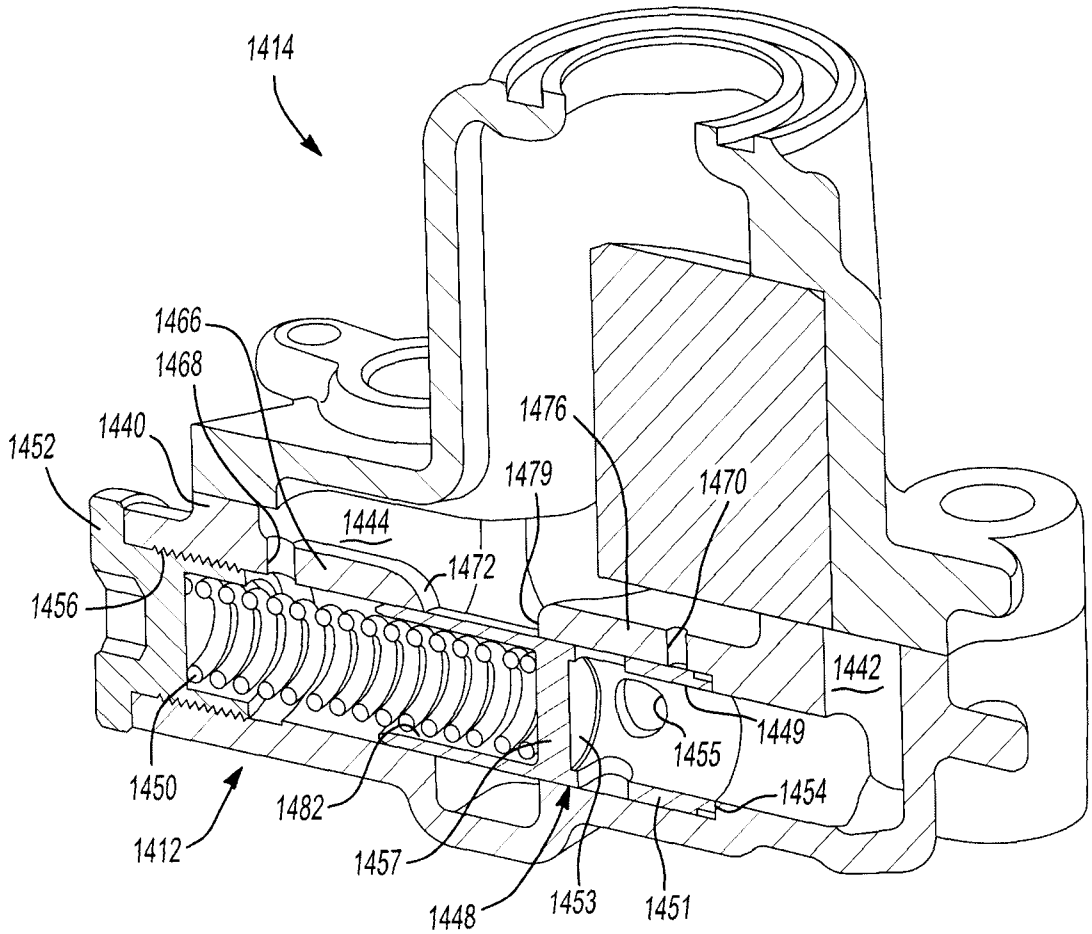
1414
1466
1468
1440
1452
1476
1479
1470
1444
1472
1456
1442
1449
1455
1450
1482
1454
1412
1457
1448
1453
1451

Fig-28

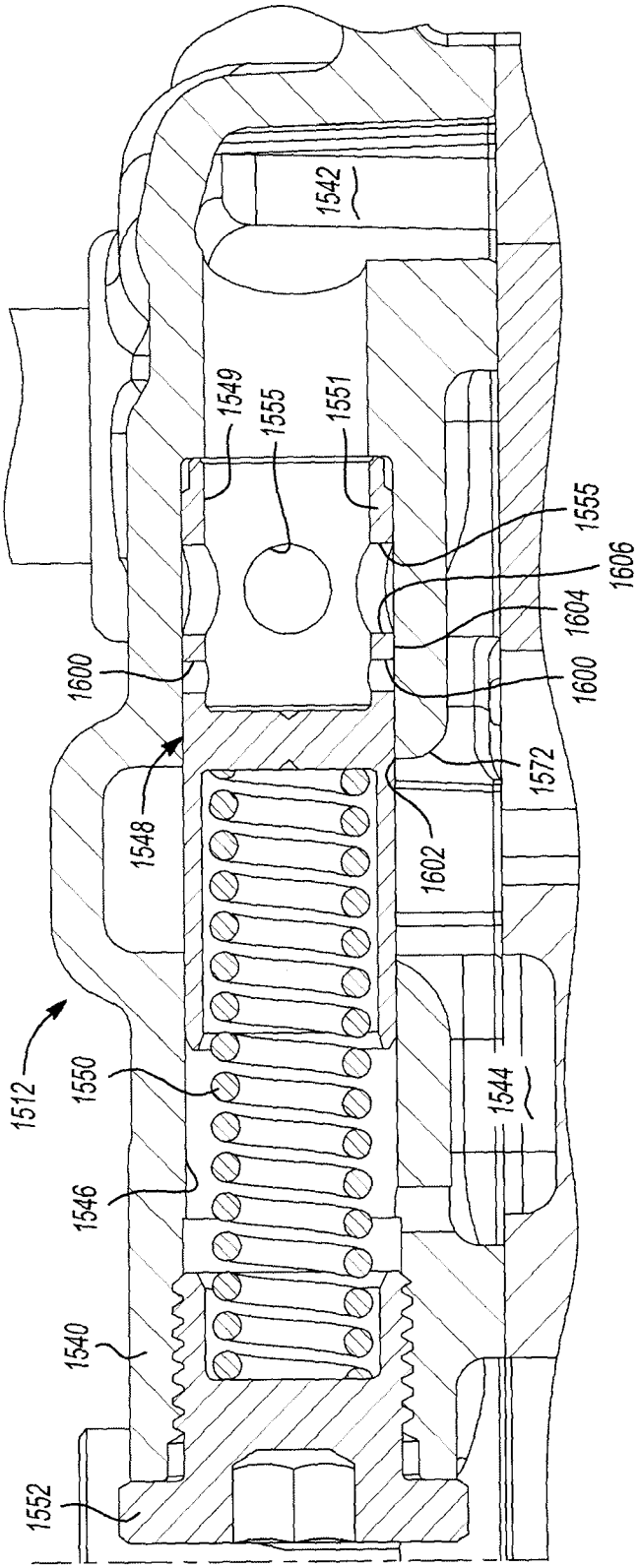
1542
1549
1555
1551
1555
1606
1604
1600
1600
1572
1548
1602
1512
1550
1544
1546
1540
1552

Fig-29

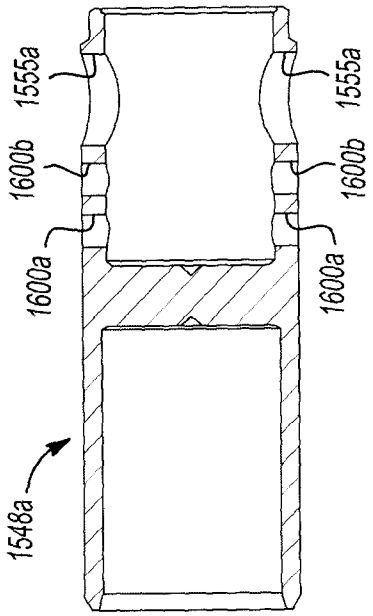
1555a
1555a
1600b
1600b
1600a
1600a
1548a

Fig-30

INTERNATIONAL SEARCH REPORT

International application No.
PCT/CA2011/001204

A. CLASSIFICATION OF SUBJECT MATTER

IPC: ***F16K 17/04*** (2006.01) , ***F01M 1/02*** (2006.01) , ***F16K 17/08*** (2006.01) , ***F16K 3/34*** (2006.01) , ***F16N 23/00*** (2006.01)

According to International Patent Classification (IPC) or to both national classification and IPC

B. FIELDS SEARCHED

Minimum documentation searched (classification system followed by classification symbols)

IPC: ***F16K 17/04*** (2006.01) , ***F01M 1/02*** (2006.01) , ***F16K 17/08*** (2006.01) , ***F16K 3/34*** (2006.01) , ***F16N 23/00*** (2006.01)

Documentation searched other than minimum documentation to the extent that such documents are included in the fields searched

Electronic database(s) consulted during the international search (name of database(s) and, where practicable, search terms used)
Epoque (Epodoc, Full Text) & Canadian Patent Database (Intellect)
Keywords: press*, reli*, valv*, hous*, chamb*, in*, out*, pump*, pist*, spring*, fluid*, bor*, port*, orific*, etc.

C. DOCUMENTS CONSIDERED TO BE RELEVANT

Category*	Citation of document, with indication, where appropriate, of the relevant passages	Relevant to claim No.
A	CA 2,533,801 A1 (WILLIAMSON, M. et al.) 24 July 2006 (24-07-2006) *Whole document*	1-18
A	US 3,972,345 A (COURT, K.) 03 August 1976 (03-08-1976) *Whole document*	1-18
A	GB 711,606 A (Bendix Aviation Corporation) 07 July 1954 (07-07-1954) *Whole document*	1-18
A	US 5,186,198 A (KENNEDY, P.G.) 16 February 1993 (16-02-1993) *Whole document*	1-18

[ ] Further documents are listed in the continuation of Box C. [X] See patent family annex.

* Special categories of cited documents :

"A" document defining the general state of the art which is not considered to be of particular relevance

"E" earlier application or patent but published on or after the international filing date

"L" document which may throw doubts on priority claim(s) or which is

"T" later document published after the international filing date or priority date and not in conflict with the application but cited to understand the principle or theory underlying the invention

"X" document of particular relevance; the claimed invention cannot be considered novel or cannot be considered to involve an inventive step when the document is taken alone

"Y" document of particular relevance; the claimed invention cannot be

Date of the actual completion of the international search	Date of mailing of the international search report
13 January 2012 (13-01-2012)	24 January 2012 (24-01-2012)

Name and mailing address of the ISA/CA	Authorized officer
Canadian Intellectual Property Office Place du Portage I, C114 - 1st Floor, Box PCT 50 Victoria Street Gatineau, Quebec K1A 0C9 Facsimile No.: 001-819-953-2476	Stephane Ouellette (819) 934-0089

INTERNATIONAL SEARCH REPORT

Information on patent family members

International application No.
PCT/CA2011/001204

Patent Document Cited in Search Report	Publication Date	Patent Family Member(s)	Publication Date
CA2533801A1	24 July 2006 (24-07-2006)	CA2533801A1	24 July 2006 (24-07-2006)
		US2006185737A1	24 August 2006 (24-08-2006)
US3972345A	03 August 1976 (03-08-1976)	AU1367976A	10 November 1977 (10-11-1977)
		CA1029272A1	11 April 1978 (11-04-1978)
		DE2623109A1	02 December 1976 (02-12-1976)
		FR2312701A1	24 December 1976 (24-12-1976)
		FR2312701B3	16 February 1979 (16-02-1979)
GB711606A	07 July 1954 (07-07-1954)	None	
US5186198A	16 February 1993 (16-02-1993)	CA2125388A1	24 June 1993 (24-06-1993)
		CA2125388C	05 January 1999 (05-01-1999)
		WO9312335A1	24 June 1993 (24-06-1993)