June 7, 1949. E. BOURLAND 2,472,563

CAN LINE DIVIDER

Filed Dec. 9, 1946 2 Sheets-Sheet 1

Fig. 1.

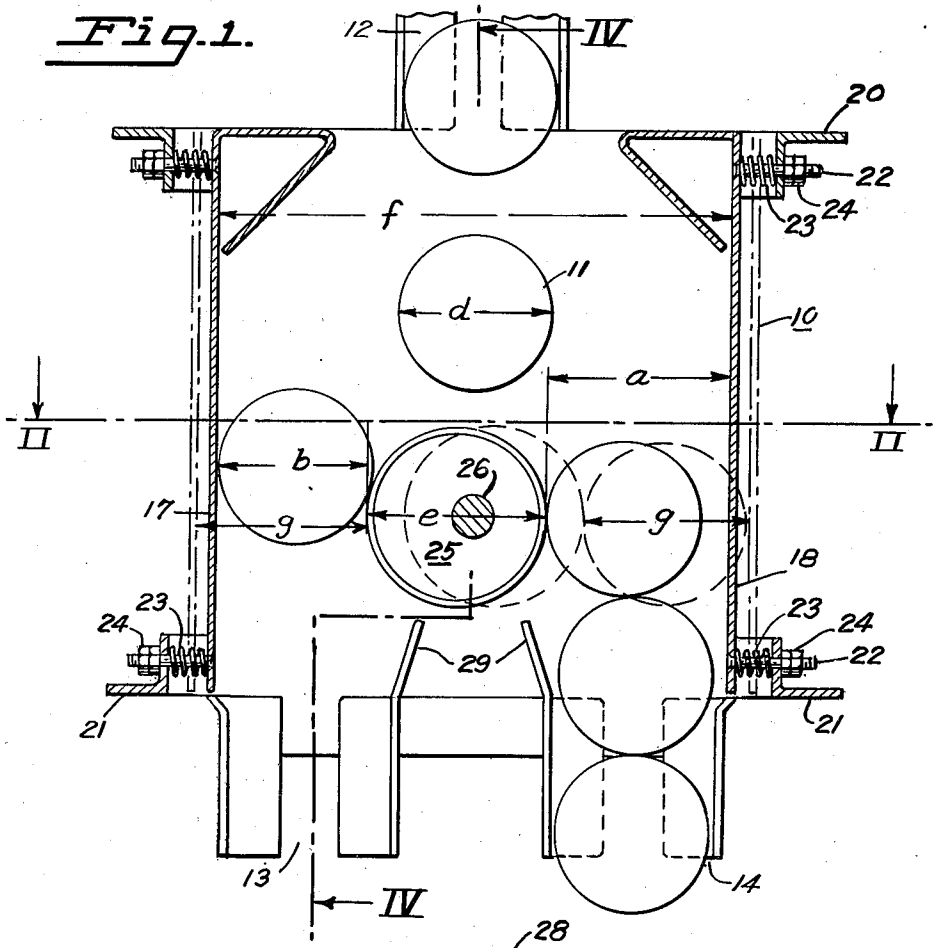

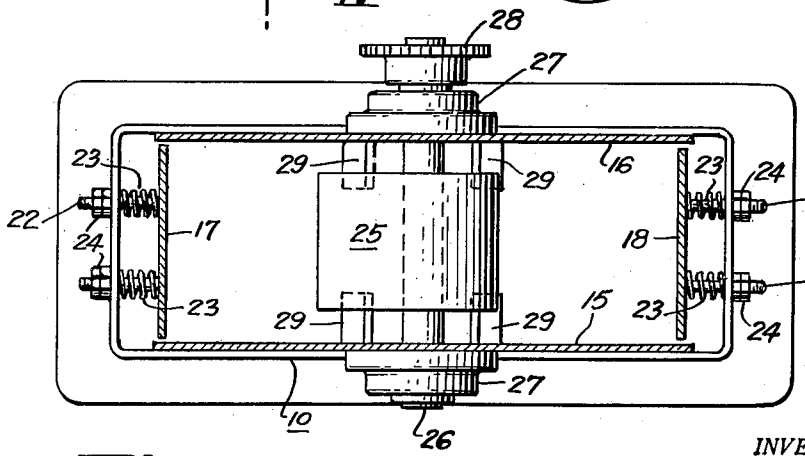

Fig. 2.

INVENTOR.
ELI BOURLAND
BY A. Bourland Cleveland
ATTORNEY

June 7, 1949. E. BOURLAND 2,472,563

CAN LINE DIVIDER

Filed Dec. 9, 1946 2 Sheets-Sheet 2

Fig. 4.

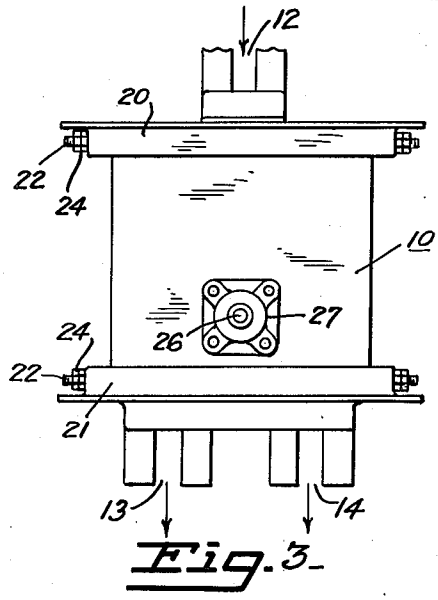

Fig. 3.

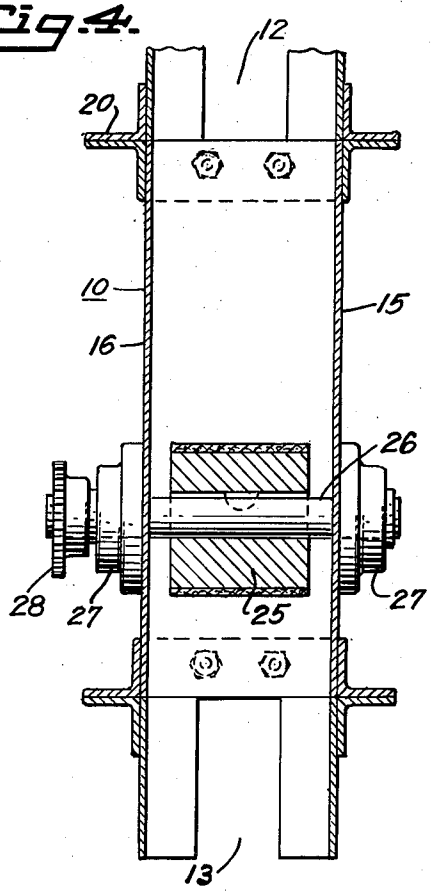

Fig. 5.

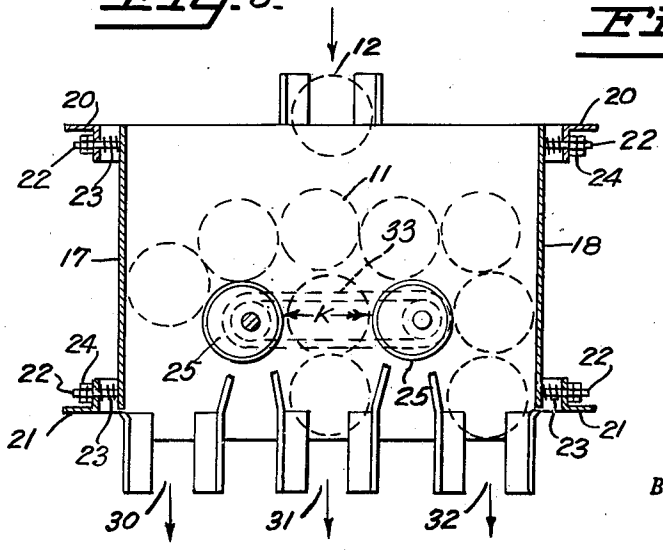

Fig. 6.

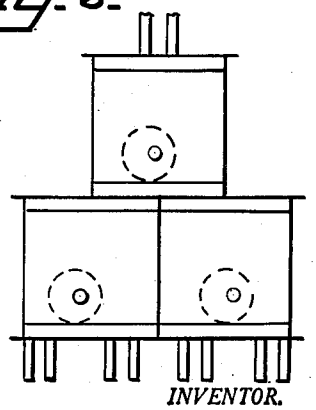

INVENTOR.
ELI BOURLAND
BY A. Bourland Owen
ATTORNEY

Patented June 7, 1949

2,472,563

UNITED STATES PATENT OFFICE

2,472,563

CAN LINE DIVIDER

Eli Bourland, Millbrae Highlands, Calif., assignor to Pacific Can Company, San Francisco, Calif., a corporation of Nevada

Application December 9, 1946, Serial No. 714,993

10 Claims. (Cl. 193—31)

1

This invention relates to an improved can line divider.

One object of the invention is to provide a can line divider which will divert cans or other cylindrical or spherical bodies fed from any source into two or more lines.

Another object of this invention is to provide a can divider which will cause a minimum of wear upon the cans; to provide a device of maximum simplicity and few moving parts; to provide a can line divider that needs no synchronizing with other parts; to provide a can line divider that will not injure cans backed up in the machine by blocked discharge lines; to provide a can line divider that will feed an uninterrupted supply of cans to one line and divide the surplus cans between one or more other lines, etc.

Other objects and advantages of this invention will appear from the following description.

In the drawings:

Fig. 1 is a sectional view in front elevation of a device embodying this invention;

Fig. 2 is a plan view taken along the line II—II of Fig. 1;

Fig. 3 is a view in front elevation showing the exterior of the device;

Fig. 4 is a view in side elevation partly in section taken on the line IV—IV of Fig. 1;

Fig. 5 is a sectional view in front elevation of a modified form of the device; and

Fig. 6 is a diagrammatic view of a modification.

The housing 10 encloses a rectangular box-like area in which a line of cans entering in single file will be divided into two lines of single file. The cams 11 enter at 12 and leave through the openings 13 and 14.

The housing 10 used to illustrate the invention is made up of a front plate 15, a rear plate 16, and two resiliently mounted side plates 17 and 18. Around the top and bottom of the housing 10 are angle-iron frames 20 and 21 to which the front plate 15 and the rear plate 16 are fastened. Bolts 22 extend from the side plates 17 and 18 and are slidably mounted in the frames 20 and 21 where the springs 23 hold them in a yielding position. The inward position of the side plates is regulated by the lock nuts 24.

Separation of the single line of cans entering the housing 10 at 12 into two lines of cans leaving the housing at 13 and 14 is accomplished by the expedient of an eccentrically mounted soft bodied cylinder 25 set with its axis in substantial alignment with the axis of the cans. Preferably the cylinder 25 is rotated by the shaft 26 mounted in bearings 27 in the plates 15 and 16. A sprocket 28 in the shaft 26 receives a chain or belt from any suitable power source.

In a device for separating the line of cans into two lines, one cylinder 25 is sufficient, and it is

2

mounted substantially parallel with the bottom of the housing 10 and with the side plates 17 and 18, and above and between the outlet openings 13 and 14. Suitable conveyor systems connect to the inlet 12 and the outlet 13 and 14 to handle the cans before and after separation. The preferred relation of the dimensions of the cylinder 25 and the cans 11 to the space between the two extreme positions of the cylinder and the side plates 17 and 18 is such that there should be less space than the can diameter between the side plate and the cylinder when the cylinder is in its position closest to the side plate, and more space than the can diameter when the cylinder is in its position farthest from the side plate. In other words, the cylinder should have such a diameter and be mounted off center on the shaft 26 to such an amount, that as it rotates, its positions of maximum clearance from the side plates 17 and 18 will provide a space a more than equal to the diameter d of the cans passing therethrough and its positions of minimum clearance will provide a space b less than the diameter d of the cans.

The shaft 26 preferably should be approximately equidistant from the plates 17 and 18, and high enough so that the cylinder 25 will clear the lips 29 of the outlet openings 13 and 14.

This will be made clear in Fig. 1 where a is the distance between the side plate 18 and the edge of the cylinder 25 when the cylinder is farthest away from the plate 14; b is the distance between the side plate 17 and the edge of the cylinder 25 when the cylinder is closest to the side plate 17 and the springs 23 are extended; d is the diameter of the cans 11; e is the diameter of the cylinder 25; and f is the width between the side walls 17 and 18 when held in by their springs 23. One other dimension is of interest, namely, that shown by g. This is taken when the side plate 17 has been forced outwardly because a can 11 was caught between the face of the cylinder 25 and the plate 17. Something has to give because the distance b is less than d, the can diameter; so the dimension g is equal to d the can diameter. When the side wall 17 is in the dotted line position, the spring 23 should still have clearance for further compression as a safeguard against a can or other object of greater dimension than d getting caught between the cylinder 25 and the side plate 17. The preferable relationship of these dimensions can be summarized as follows:

a should be greater than d
b should be less than d
g should be at least equal to d

With these relationships in mind the operation of the device will be clear. The cans pour into the housing at 12. If the cylinder 25 is in the position shown in full lines in Fig. 1 when a can

11 hits it, the can will be deflected to the right. If it is moving fast it may fall through the opening *a* into the outlet 14 before the cylinder 25 has rotated into its dotted line position and the clearance dimension becomes *g* or less than the can diameter. If the cylinder 25 is rotating slowly several cans may pass through the space *a* into the outlet 14 before the cylinder rotates enough to make the clearance over the outlet 13 equal to the can diameter *d*. So long as this latter clearance is equal at least to *d* the cans will be diverted into the outlet 13 and its conveyor C, while no cans will be going into the outlet conveyor at 14.

While the present device could be set to send alternate cans in exact alternate sequence into the outlets 13 and 14, this is not usually necessary in practice, so it does not matter if several cans go into one outlet before it is closed off and several cans then go into the other outlet. The result will average out so that a fairly equal division of the cans is made between the two outlets.

It sometimes happens that the cans being fed into the outlet conduits at 13 and 14 will not be taken out of the conduit as fast as they are fed into it with the result that the cans will back up into the housing 10 as shown on the right hand side. When this occurs (as well as when a can happens to come into the space between the cylinder 25 and the side plate 18 as the space is narrowing so that the can is caught and held by the cylinder 25) the cylinder 25 will press on the can 11 and through it force the side plate 18 outwardly into the dotted line position. This causes no injury to the can or to the machine. When the cans blocking the outlet 14 move on, the can adjacent the cylinder 25 will drop down as soon as the dimension becomes equal to *a*.

This feature makes the device foolproof and eliminates injury to the cans a well as eliminating any need for synchronizing the divider with other parts of the can line, especially if the machines located beyond the outlet conduits 13 and 14 have to be stopped from time to time. With this device the operator need not concern himself with stopping rotation of the cylinder 25 because no injury will come to the cans held on it when the line stops moving.

In Fig. 5 is shown a modification of the device where the line of cans is to be diverted into three outlet conduits 30, 31 and 32. The object of this device is not to get an equal division of the cans between the three outlets, but to feed cans without hindrance into the middle outlet and into the outside outlets go the overflow. This has an advantage, for if the outlets 30, 31 and 32 are connected to three filling machines, for example, then the operator can feed the cans in at 12 at the capacity of the three filling machines. The result will be that each line will get its fair share of cans.

In Fig. 5 the same reference numerals are used where possible. There are two cylinders 25 driven by a chain 33 to keep the cylinders synchronized to each other. The dimensions between the side plates 17 and 18 and the cylinders 25 are the same as on Fig. 1. The dimension *k* is constant and is equal to the dimension *a* in Fig. 1; that is, *k* should be greater than the can diameter *d*.

In operation the device of Fig. 5 will feed a continuous line of cans to the center outlet 31 through the gap *k* between the cylinders. There will be little interference with this flow of cans into the outlet 31 from the rotation of the cylinders 25. If the machine connected to the center line 31 uses up cans as fast as they are coming through the inlet 12, very few cans will be diverted to the outlets 30 and 32. However, the minute that cans slow down in the conduit 31 they will back up into the space *k* between the cylinders 25 and additional cans entering at 12 will be deflected to the side outlets 30 and 32. They will enter these outlets during the time the cylinders 25 are away from the side plates 17 and 18 by the dimension *a*.

A way of getting a line of cans divided into four lines is to use three of the devices like Fig. 1 arranged in pyramid-like form with the outlet 13 of the top one connected to the inlet 12 of the lower left one and the outlet 14 of the top one connected to the inlet 12 of the lower right one. This is shown diagrammatically in Fig. 6.

It will be apparent from the description and drawings that I have provided a device which is simple to construct and which is also simple to adjust so that different sized cans may be divided. The word "can" as used herein and in the claims is intended to cover spherical bodies and cylindrical articles other than cans in the popular sense of the word.

Changes may be made in the size, shape, material and arrangement of parts which do not depart from the spirit of my invention or from the scope of my claims.

I claim:

1. In a can line divider, the combination with a receptacle having side plates, of cylindrical means rotatably mounted in said receptaile so as to move in a generally horizontal position toward and away from said side plates as it rotates, a can feeding inlet opening into said receptacle and positioned so that the articles being fed will lie adjacent said cylindrical means; resilient mounting means for said side plates so that during rotation of said cylindrical means the spacing between said means and the adjacent side plate will vary from a space through which said can will not pass to a space through which it will pass; means for rotating said cylindrical means, and outlets in the bottom of said receptacle through which each can will be discharged.

2. In a can line divider, the combination with a receptacle having side plates, a pair of cylindrical means rotatably mounted in said receptacle so as to move in a generally horizontal position toward and away from said side plates as it rotates, a can feeding inlet opening into said receptacle and positioned so that the articles being fed will lie adjacent said cylindrical means; resilient mounting means for said side plates so that during rotation of said cylindrical means the spacing between said means and the adjacent side plate will vary from a space through which said can will not pass to a space through which it will pass; means for rotating said cylindrical means; and outlets in the bottom of said receptacle through which each can will be discharged.

3. A can line divider, including a housing having an inlet adapted to receive cans, a plurality of outlets in its bottom for said cans, and sides adjacent the outside edges of said outlets, a shaft mounted in said housing substantially parallel with its bottom and parallel with said sides and above and between said outlets, means for rotating said shaft, and a cylinder mounted off center on said shaft and of such a diameter that as it rotates its positions of maximum clearance

from said sides will provide a space more than equal to the diameter of the cans passing therethrough, and its position of minimum clearance from said sides will provide a space less than equal to the diameter of the cans passing therethrough, said sides and the periphery of said cylinder being resiliently movable with respect to each other under abnormal stress.

4. A can line divider, including a housing having an inlet adapted to receive cans, a plurality of outlets in its bottom for said cans, and resiliently mounted side plates adjacent the outside edges of said outlets, a shaft mounted in said housing substantially parallel with its bottom and parallel with said side plates and above and between said outlets, means for rotating said shaft, and a cylinder mounted off center on said shaft and of such a diameter that as it rotates its positions of maximum clearance from said side plates will provide a space more than equal to the diameter of the cans passing therethrough, and its positions of minimum clearance from said side plates will provide a space less than equal to the diameter of the cans passing therethrough.

5. A can line divider, including a housing having an inlet adapted to receive cans, a plurality of outlets in its bottom for said cans, and sides adjacent the outside edges of said outlets, a shaft mounted midway between said sides in said housing substantially parallel with its bottom and parallel with said sides and above and between said outlets, means for rotating said shaft, and a cylinder mounted off center on said shaft and of such a diameter that as it rotates its positions of maximum clearance from said sides will provide a space more than equal to the diameter of the cans passing therethrough, and its positions of minimum clearance from said sides will provide a space less than equal to the diameter of the cans passing therethrough, said sides and the periphery of said cylinder being resiliently movable with respect to each other under abnormal stress.

6. A can line divider including a housing having an inlet to receive cans, a plurality of outlets for said cans in the bottom of said housing, and resiliently mounted side plates at the side extremities of said housing; eccentric means rotatably positioned in said housing substantially parallel to said side plates and to the bottom of said housing; the size and eccentricity of said means being such that a can can pass between said means and each of said side plates during part of each period of rotation and cannot pass between said means and said plates during another part of each said period.

7. A can line divider including a housing having an inlet to receive cans, a plurality of outlets for said cans in the bottom of said housing, and resiliently mounted side plates at the side extremities of said housing; eccentric means rotatably positioned in said housing substantially parallel to said side plates and to the bottom of said housing; the size and eccentricity of said means being such that a can can pass between said means and each of said side plates during part of each period of rotation and cannot pass between said means and said plates during another part of each said period, the maximum opening between said means and one said plate occurring at a different time from that of the maximum opening between said means and the other said plate.

8. A can line divider, including a housing having an inlet adapted to receive cans, a main outlet in its bottom and one or more outlets adjacent said main outlet, and sides adjacent the outside edges of said housing, a pair of cylindrical means mounted on a generally horizontal axis for eccentric rotation in said housing adjacent said sides, the spacing between said cylindrical means being greater than the diameter of a can whereby an unobstructed way is provided for the passage of cans to said main outlet, and the spacing between each said cylindrical means and its adjacent sides being such that a can can pass between it and said sides during part of each cycle of rotation and cannot pass during the balance of said cycle of rotation, one of said sides and the periphery of the cylindrical means adjacent thereto being resiliently movable with respect to each other upon cans lodging in the space therebetween, and means for rotating said cylindrical means.

9. A can line divider, including a housing having an inlet adapted to receive cans, a main outlet in its bottom and one or more outlets adjacent said main outlet, and side plates adjacent the outside edges of said housing, a pair of cylindrical means mounted on a generally horizontal axis for eccentric rotation in said housing adjacent said side plates, the spacing between said cylindrical means being greater than the diameter of a can whereby an unobstructed way is provided for the passage of cans to said main outlet, and the spacing between each said cylindrical means and its adjacent side plate being such that a can can pass between it and said side plate during part of each cycle of rotation and cannot pass during the balance of said cycle of rotation, and means for rotating said cylindrical means in unison whereby the space between adjacent surfaces of said cylindrical means will remain substantially constant.

10. A can line divider, including a housing having an inlet adapted to receive cans, a plurality of outlets in its bottom for said cans, and side plates adjacent the outside edges of said outlets, a plurality of shafts mounted in said housing substantially parallel with its bottom and parallel with said side plates and above and between said outlets, means for rotating said shafts at the same speed, and a plurality of cylinders each mounted off center on its respective shaft, and spaced so that at all times a can can pass between adjacent cylinders, and spaced in relation to said side plates and of such a diameter that as the cylinder adjacent either of said side plates rotates the position of maximum clearance from the adjacent plate will provide a space through which a can will pass, and the position of minimum clearance will provide a space less than equal to the diameter of the cans passing therethrough.

ELI BOURLAND.

REFERENCES CITED

The following references are of record in the file of this patent:

UNITED STATES PATENTS

Number	Name	Date
1,940,526	Berger	Dec. 19, 1933
2,127,924	Kimball et al.	Aug. 23, 1938