United States Patent

[11] **3,575,070**

[72] Inventor **Frank L. Nichols**
Warsaw, Ind.

[21] Appl. No. **767,440**
[22] Filed **Oct. 14, 1968**
[45] Patented **Apr. 13, 1971**
[73] Assignee **Osborn Manufacturing Corporation**
Warsaw, Ind.

[54] **PINCER TYPE TOOL**
7 Claims, 5 Drawing Figs.

[52] **U.S. Cl.** **81/416,** 81/417, 267/153, 30/261
[51] **Int. Cl.** **B25b 7/08**
[50] **Field of Search** ..... 81/302, 321—2, 416, 417, 427; 30/244, 253, 261, 57.1; 267/153, 154; 64/27 (R); 16/74, 75, 180; 287/101

[56] **References Cited**

UNITED STATES PATENTS

1,954,934	4/1934	Houdaille et al.	16/75
3,490,756	1/1970	Spier	81/417X
663,565	12/1900	Fisher	30/261
908,947	1/1909	Burkhart	81/417X
1,646,427	10/1927	Skidmore	64/11
1,657,348	1/1928	Drumm	81/417X
1,733,771	10/1929	Baker	64/27(R)
1,753,985	4/1930	Flinterman	267/57.1
2,449,654	9/1948	Jessop	64/27(R)
3,458,933	8/1969	Rogers	81/417

FOREIGN PATENTS

446,033	4/1936	Great Britain	64/27(R)

Primary Examiner—Robert C. Riordon
Attorney—Le Blanc & Shur

ABSTRACT: Disclosed is a pincer-type tool having elongated members pivotally mounted in overlying relation one to the other intermediate their ends with the jaw and handle portion of each member lying on respective opposite sides of the other member. The overlying portions of the members have recesses facing one another and a block of elastomeric material is disposed within the recesses with the members being pivotally secured one to the other by a rivet extending through the overlying portions and the elastomeric element. The recesses and element are complementarily polygonally shaped such that the elastomeric block biases the members into a predetermined position relative to one another. The recesses are arranged to normally locate the jaws of the members in butting or spaced relation one to the other in the respective embodiments hereof.

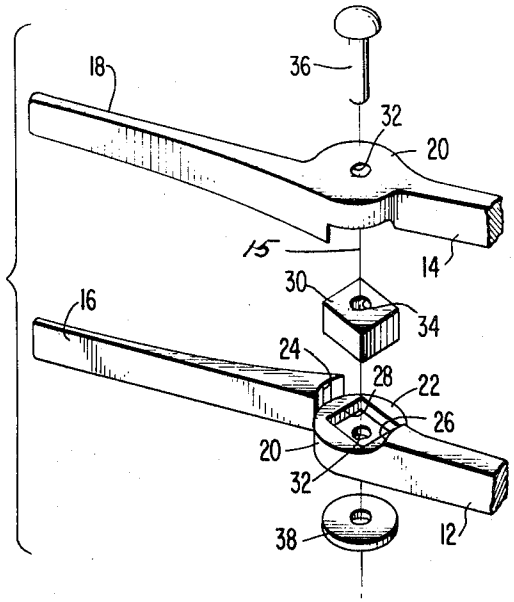

FIG. 2

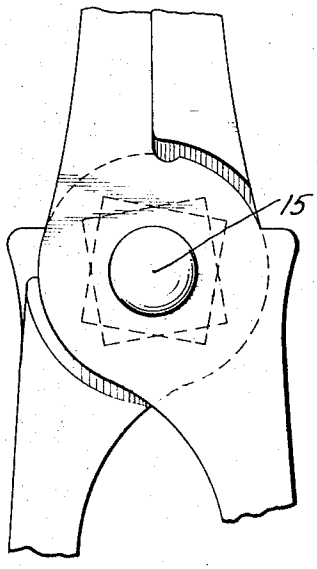

FIG. 3

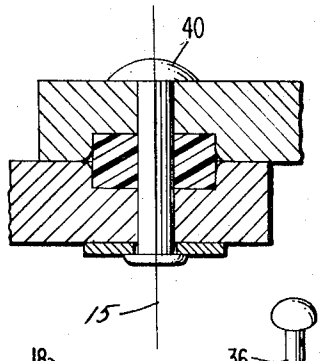

FIG. 4

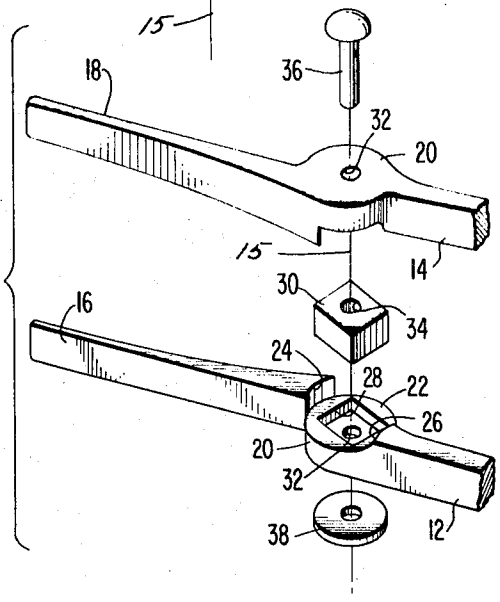

FIG. 1

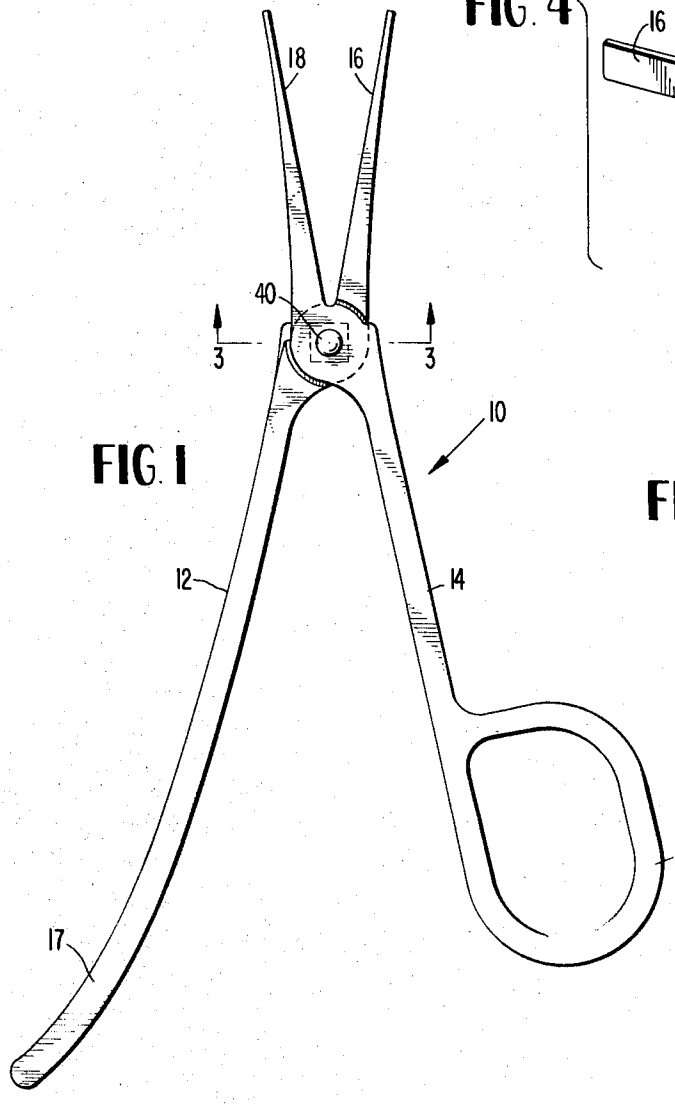

FIG. 5

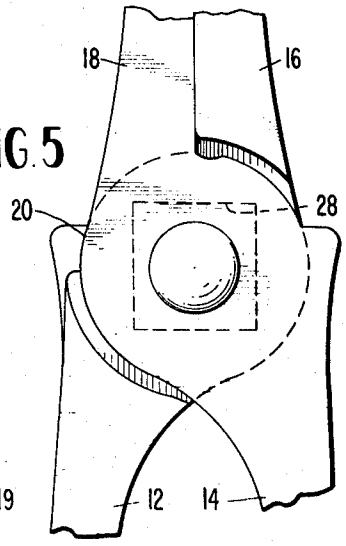

INVENTOR
FRANK L. NICHOLS

BY LeBlanc & Shur
ATTORNEYS

PINCER TYPE TOOL

The present invention relates to an improved tool of the pincer type and particularly relates to improved pliers wherein the members of the pliers are uniquely biased into a predetermined position.

Pincer-type tools, for example pliers, wire cutters and the like, generally comprise a pair of members pivotally secured one to the other intermediate their ends with each member overlapping and crossing the other member. The oppositely-facing like ends of the members on one side of the pivotal axis are comprised of jaws or work surfaces having serrations, knurled surfaces or the like, while the opposite like ends on the other side of the pivotal axis are comprised of handles by which the tool may be manipulated. Most often, the pivotal mounting comprises a pin or bolt-type connection loosely holding the members of the tool together for free pivotal movement. When applying the tool to the work, it will be appreciated that the members must first be manipulated to space the working surfaces one from the other as to enclose the work and then manipulated to move toward one another to clamp the work between the jaws. Manipulation of the tool in this manner is awkward and cumbersome, particularly when manipulated by one hand as in the usual case.

Certain pincer-type tools have been provided with springs for maintaining the jaws of the tool in a predetermined position. For example, wire cutters, pruning shears and the like are often provided with springs to accomplish this purpose. This type of pincer tool often has a helical spring disposed between the handles of the tool normally holding the tool jaws in a fully opened position. Thus, the work can be readily disposed between the jaws of the tool, and the handles moved toward one another to perform the intended function of the tool, for example, cutting. The helical spring, however, often interferes with the manipulation of the tool and injury is sometimes caused to fingers caught within the coils of the spring when the handles are squeezed toward one another. Additionally, these tools require a substantial number of parts, time consuming assembly of such parts, and, as a result, are costly to manufacture. In short, there has remained many problems in the manufacture and use of a pincer-type tool, particularly of those tools wherein its members are biased into a predetermined position.

The present invention overcomes or minimizes the above-discussed disadvantages and difficulties associated with prior pincer tools of this type and provides an improved pincer-type tool or pliers providing significant advantages in construction and mode of use over prior tools of this type. Particularly, the present invention provides a pincer-type tool having a pair of tool members pivotally mounted one to the other intermediate their ends and in overlying relation one to the other. The oppositely facing like ends on one side of the pivotal axis are comprised of jaws while the opposite ends of the members on the other side of the pivotal axis are comprised of a pair of handles by which the tool may be manipulated and the jaws disposed in selected positions relative to one another.

It is a significant feature hereof that the members are biased to a predetermined position relative to one another by an elastic block disposed at the pivotal juncture of the two members. Specifically, the overlapping portions of the members are provided with recesses which open toward one another and receive opposite end portions of the elastic block. The block has a polygonally configured periphery, and the recesses are correspondingly polygonally configured such that the opposite end portions of the elastic block engaging within the recesses are precluded from relative rotation while simultaneously the members are rotatable relative to one another by distorting the elastic block. The members are pivotally secured one to the other with the elastic block disposed therebetween by a rivet pin extending through the overlapping portions of the members and the elastic block.

In one form hereof, the recesses are oriented on the members such that they lie in exact lateral registry one with the other (that is, the sides of the polygonally shaped recesses lie in lateral alignment each with the other) when the jaws of the pincer tool butt one another. In this manner, the elastic block normally maintains the jaws of the tool in butting relation one with the other. To open the tool jaws, the members are pivoted relative to one another against the natural bias of the elastic block and, after use, the jaws will return to their normal closed position under the bias of the elastic block.

In another form hereof, the recesses are oriented relative to the members of the tool such that they lie in exact lateral registry one with the other when the tool jaws are spaced at a predetermined angular relation one from the other, i.e., in the fully open position. This is particularly useful where the tool is used for clamping about small objects as the jaws are thus normally maintained in spaced relation one to the other to readily receive the object. By squeezing the handles of the members against the bias of the elastic block, the object may be readily clamped. By releasing the handles, the members return to the predetermined position under the natural bias of the elastic block.

With the foregoing construction, it will be seen that the tool is comprised of a minimum number of parts which greatly facilitates assembly of the tool. Moreover, the members of the tool can be readily formed, for example of cast aluminum, with the recesses being formed simultaneously therewith and in accurate location relative to one another and to the pivotal axis of the assembled tool. Thus it will be appreciated that the present pincer-type tool can be readily and easily fabricated and assembled and at minimum expense.

Accordingly, it is a primary object of the present invention to provide an improved pincer-type tool.

It is another object of the present invention to provide an improved pincer-type tool which is normally biased into a predetermined position.

It is still another object of the present invention to provide an improved pincer-type tool having a pair of members biased into a predetermined position by an element located about the pivotal axis of the members.

It is a further object of the present invention to provide a pincer-type tool having a pair of members biased into predetermined position with the jaws thereof normally spaced one from the other and a tool having the members biased into a predetermined position with the jaws thereof normally disposed in butting relation one to the other.

It is a still further object of the invention to provide an improved pincer-type tool which is readily and easily manufactured and assembled and at minimum cost.

These and further objects and advantages of the present invention will become more apparent upon reference to the following specification, appended claims and drawings wherein:

FIG. 1 is a side elevational view of a pincer-type tool constructed in accordance with the present invention;

FIG. 2 is a fragmentary enlarged elevational view of the pivotal mounting of the members forming the tool hereof;

FIG. 3 is a cross-sectional view thereof taken about line 3–3 in FIG. 1;

FIG. 4 is a fragmentary exploded perspective view of the tool hereof illustrating the pivotal connection between the members of the tool; and

FIG. 5 is a fragmentary enlarged side elevational view of another form of the tool hereof.

Referring to the drawings, particularly to FIG. 1, there is illustrated a pincer-type tool, generally indicated at 10, having a pair of elongated members 12 and 14 pivotally mounted one to the other intermediate their ends as at 15. Members 12 and 14 have respective working surfaces or jaws and 18 formed along oppositely facing like end portions thereof on one side of axis 15. The opposite ends of the respective members 12 and 14 on the other side of axis 15 form handles for the tool with member 12 having an elongated lower curved handle portion 17 and member 14 having a closed loop portion 19 adapted to receive one or more fingers when the tool is manipulated.

Each of the members **12** and **14** has a circular hub portion **20**, the inner face **22** of which is inset from the inside face of the associated member leaving arcuate wall portions **24** and **26** about hub **20** and from which respectively extend jaws **16** and handle portions of the members. The hub portions **20** are inset such that, when the members are pivotally secured one to the other, the wall portions **24** and **26** of each member receive and arcuately overlie the periphery of the hub portion **20** of the opposite member between the wall portions **24** and **26** thereof whereby jaws **16** and **18** and handles **17** and **19** lie substantially in a common plane.

A recess **28** is formed in the hub portion **20** of each of the members **12** and **14**, the recesses opening inwardly toward one another. The recesses are formed to provide a plurality of discrete sides with the illustrated and preferred form of recess **28** being square in shape. A block **30** formed of an elastic material such as rubber or plastic, and having a width substantially equal to the width of the combined recesses **28**, is provided and is similarly configured as the recesses **28**. That is to say, block **30** has a like number of discrete sides as recesses **28** and is complementary to and receivable within the recesses **28**. It will be appreciated that, with the foregoing configuration, relative rotation between the end portion of block **30** and its associated recess in each of the members **12** and **14** is precluded while permitting rotation of members **12** and **14** relative to one another about axis **16**. While the preferred and illustrated form of pincer tool provides a four-sided or square recess and a corresponding shaped block **30**, it will be appreciated that any number of discrete sides can be provided recess **28** and the block **30**. Moreover, it is not necessary that the recess in each member have a like number of sides as the recess in the other member since opposite end portions of block **30** can be formed to have a different number of sides corresponding to the number of sides of the recess in which that end portion of element **30** will be received. Additionally, it will be appreciated that the block **30** and recesses could be cylindrical in shape provided the end portions of the block receivable in the recesses are respectively fixed therein as by bonding with an adhesive. Boreholes **32** and **34** are respectively provided through the hub portions **20** and element **30** and receive a rivet pin **36** which also engages through a washer **38** provided on the side of the pincers opposite a rivet head **40**.

In the form hereof illustrated in FIGS. **1** and **2**, the recesses **28** are formed in the hub portions **20** of the members **12** and **14** such that the recesses **28** lie in exact lateral registry one with the other when the jaws **16** and **18** are angularly spaced one from the other, preferably in a maximum open position. In other words, the angular orientation of the recesses **28** with respect to hub portions **20** is such that the discrete sides thereof are laterally aligned only when the working surfaces **16** and **18** are spaced one from the other as seen in FIG. **1**. It will be appreciated that when the recesses lie in such lateral registry, the elastic block or element **30** is undistorted and lies in its natural configuration. When the handle portions of the member **12** and **14** are squeezed, for example when an object is to be gripped between jaws **16** and **18**, it will be seen that element **30** is distorted and tends to bias or urge the members **12** and **14** back to the original position with the recesses lying in exact lateral registry one with the other. Specifically, portions of the element **30** lying within the respective recesses rotate with the respective members resiliently distorting the element **30** from its natural shape. The element **30** thus biases the members **12** and **14** toward the original predetermined position.

In the form hereof illustrated in FIG. **5**, the recesses **28** are oriented such that they lie in exact lateral alignment one with the other only when jaws **16** and **18** butt one another. It will thus be seen that pivotal movement of members **12** and **14** away from one another to open jaws **16** and **18** resiliently distorts elastic element **30**. When distorted, element **30** tends to return to its natural shape and thereby biases members **12** and **14** into their normal position seen in FIG. **5**.

In a preferred form hereof, the members **12** and **14** are readily die cast of aluminum and the elastic block **30** is comprised of rubber. It will thus be seen that the parts hereof may be readily and easily fabricated and assembled by merely locating the block **30** in the recesses and riveting the members **12** and **14** one to the other. The tool may thus be manufactured at low cost.

It will thus be appreciated that the objects of the present invention are fully accomplished in that there has been provided an improved pincer-type tool which is biased into a predetermined position. Moreover, the element providing the bias to the tool is located in the hub portions of the members forming the tool about the pivotal axis thereof, and thus does not interfere with or otherwise obstruct manipulation of the tool by its handles. Additionally, the foregoing construction provides a readily and easily manufactured pincer tool at low cost.

The invention may be embodied in other specific forms without departing from the spirit or essential characteristics thereof. The present embodiments are therefore to be considered in all respects as illustrative and not restrictive, the scope of the invention being indicated by the appended claims rather than by the foregoing description, and all changes which come within the meaning and range of equivalency of the claims are therefore intended to be embraced therein.

I claim:

1. A tool comprising a pair of elongated tool members pivotally mounted one to the other intermediate their ends for movement between first and second positions with said members lying generally in a common plane substantially normal to the pivotable axis of said members, said members carrying jaws adjacent oppositely facing like end portions thereof on one side of said pivotable axis and laterally overlying one another with the jaw and opposite end portion of each member lying on respective opposite sides of the other member, the overlying portions of said members having polygonally shaped recesses opening inwardly toward one another, and an elastic element disposed between said members about the pivotable axis thereof, opposite end portions of said element being receivable in said recesses with each end portion having a like polygonal configuration as the associated recess to preclude relative rotation between said member and the associated end portion of said element, said element being operable to bias said members for pivotable movement into said first position in response to pivotal movement of said members toward said second position.

2. A tool according to claim **1** wherein said first position locates said jaws in spaced relation one to the other.

3. A tool according to claim **1** wherein said first position locates said jaws in butting relation one with the other.

4. A tool according to claim **1** wherein said elastic element is formed of rubber.

5. A tool according to claim **1** wherein said elastic element is formed of a plastic material.

6. A tool according to claim **1** including a pin securing said members one to the other and extending through said element and the overlying portions of said members.

7. A tool according to claim **1** wherein said element normally retains said members in said first position.