Office de la Propriété Intellectuelle du Canada
Un organisme d'Industrie Canada

Canadian Intellectual Property Office
An agency of Industry Canada

CA 2404627 C 2010/04/27

(11)(21) **2 404 627**

(12) **BREVET CANADIEN**
CANADIAN PATENT

(13) **C**

(86) Date de dépôt PCT/PCT Filing Date: 2001/03/05
(87) Date publication PCT/PCT Publication Date: 2001/09/13
(45) Date de délivrance/Issue Date: 2010/04/27
(85) Entrée phase nationale/National Entry: 2002/09/27
(86) N° demande PCT/PCT Application No.: GB 2001/000941
(87) N° publication PCT/PCT Publication No.: 2001/066828
(30) Priorité/Priority: 2000/03/06 (GB0005377.7)

(51) Cl.Int./Int.Cl. *C25B 11/02* (2006.01), *A61L 2/03* (2006.01), *C02F 1/46* (2006.01), *C02F 1/461* (2006.01), *C25B 9/02* (2006.01), *C02F 1/467* (2006.01)

(72) Inventeurs/Inventors:
HILL, ANDREW, GB;
HILL, JOHN MICHAEL, GB;
PARTINGTON, THOMAS JOHN, GB

(73) Propriétaire/Owner:
ATRAVERDA LIMITED, GB

(74) Agent: ROBIC

(54) Titre : JEU D'ELECTRODES TUBULAIRES
(54) Title: TUBULAR ELECTRODE ASSEMBLY

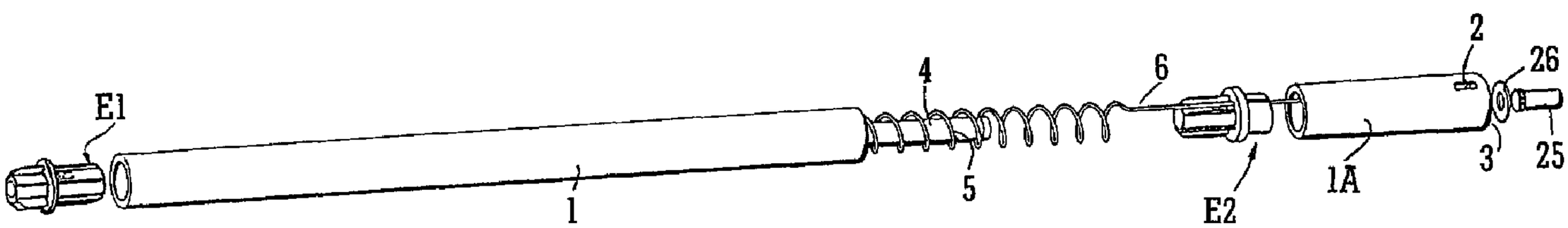

(57) Abrégé/Abstract:
An electrode comprises an outer tube (1) containing a spiral inner electrode (5) which surrounds a rod (4) held at its ends by fittings (E1, E2) in the ends of the tube.

(12) INTERNATIONAL APPLICATION PUBLISHED UNDER THE PATENT COOPERATION TREATY (PCT)

(19) World Intellectual Property Organization
International Bureau

(43) International Publication Date
13 September 2001 (13.09.2001)

PCT

(10) International Publication Number
WO 01/66828 A3

(51) International Patent Classification[7]: C02F 1/46, A61L 2/03, A62D 3/00, C25B 11/02, 9/02

(21) International Application Number: PCT/GB01/00941

(22) International Filing Date: 5 March 2001 (05.03.2001)

(25) Filing Language: English

(26) Publication Language: English

(30) Priority Data:
0005377.7 6 March 2000 (06.03.2000) GB

(71) Applicant *(for all designated States except US)*: **ATRAVERDA LIMITED** [GB/GB]; 11b Stephenson Road, Speedwell Industrial Estate, Staveley, Derbyshire S43 3JN (GB).

(72) Inventors; and
(75) Inventors/Applicants *(for US only)*: **HILL, Andrew** [GB/GB]; Atraverda Limited, 11b Stephenson Road, Speedwell Industrial Estate, Staveley, Derbyshire S43 3JN (GB). **HILL, John, Michael** [GB/GB]; Atraverda Limited, 11b Stephenson Road, Speedwell Industrial Estate, Staveley, Derbyshire S43 3JN (GB). **PARTINGTON, Thomas, John** [GB/GB]; Atraverda Limited, 11b Stephenson Road, Speedwell Industrial Estate, Staveley, Derbyshire S43 3JN (GB).

(74) Agent: **SHAW, Laurence**; Laurence Shaw & Associates, Metropolitan House, 5th Floor, 1 Hagley Road, Edgbaston, Birmingham B16 8TG (GB).

(81) Designated States *(national)*: AE, AG, AL, AM, AT, AU, AZ, BA, BB, BG, BR, BY, BZ, CA, CH, CN, CO, CR, CU, CZ, DE, DK, DM, DZ, EE, ES, FI, GB, GD, GE, GH, GM, HR, HU, ID, IL, IN, IS, JP, KE, KG, KP, KR, KZ, LC, LK, LR, LS, LT, LU, LV, MA, MD, MG, MK, MN, MW, MX, MZ, NO, NZ, PL, PT, RO, RU, SD, SE, SG, SI, SK, SL, TJ, TM, TR, TT, TZ, UA, UG, US, UZ, VN, YU, ZA, ZW.

(84) Designated States *(regional)*: ARIPO patent (GH, GM, KE, LS, MW, MZ, SD, SL, SZ, TZ, UG, ZW), Eurasian patent (AM, AZ, BY, KG, KZ, MD, RU, TJ, TM), European patent (AT, BE, CH, CY, DE, DK, ES, FI, FR, GB, GR, IE, IT, LU, MC, NL, PT, SE, TR), OAPI patent (BF, BJ, CF, CG, CI, CM, GA, GN, GW, ML, MR, NE, SN, TD, TG).

Declarations under Rule 4.17:
— *as to applicant's entitlement to apply for and be granted a patent (Rule 4.17(ii)) for the following designations AE, AG, AL, AM, AT, AU, AZ, BA, BB, BG, BR, BY, BZ, CA, CH, CN, CO, CR, CU, CZ, DE, DK, DM, DZ, EE, ES, FI, GB, GD, GE, GH, GM, HR, HU, ID, IL, IN, IS, JP, KE, KG, KP, KR, KZ, LC, LK, LR, LS, LT, LU, LV, MA, MD, MG, MK, MN, MW, MX, MZ, NO, NZ, PL, PT, RO, RU, SD, SE, SG, SI, SK, SL, TJ, TM, TR, TT, TZ, UA, UG, UZ, VN, YU, ZA, ZW, ARIPO patent (GH, GM, KE, LS, MW, MZ, SD, SL, SZ, TZ, UG, ZW), Eurasian patent (AM, AZ, BY, KG, KZ, MD, RU, TJ, TM), European patent (AT, BE, CH, CY, DE, DK, ES, FI, FR, GB, GR, IE, IT, LU, MC, NL, PT, SE, TR), OAPI patent (BF, BJ, CF, CG, CI, CM, GA, GN, GW, ML, MR, NE, SN, TD, TG)*
— *of inventorship (Rule 4.17(iv)) for US only*

Published:
— *with international search report*

(88) Date of publication of the international search report:
7 March 2002

For two-letter codes and other abbreviations, refer to the "Guidance Notes on Codes and Abbreviations" appearing at the beginning of each regular issue of the PCT Gazette.

WO 01/66828 A3

(54) Title: ELECTRODE ASSEMBLY

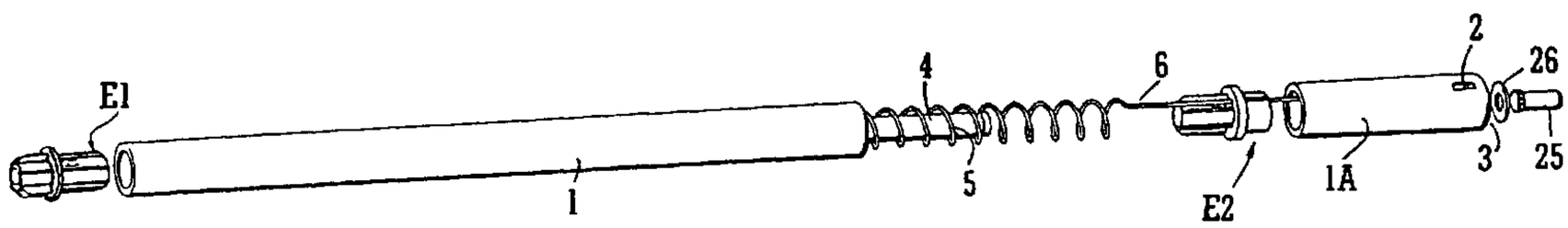

(57) Abstract: An electrode comprises an outer tube (1) containing a spiral inner electrode (5) which surrounds a rod (4) held at its ends by fittings (E1, E2) in the ends of the tube.

TUBULAR ELECTRODE ASSEMBLY

The invention relates to an electrode.

In our EP-0883700B we have described and claimed an electrode for use in electrochemical treatment of metal reinforced concrete, the electrode comprising a generally cylindrical body formed of porous material, the body having an external surface and an internal surface, a power supply conductor in use, being in electrical contact with the internal surface and with a supply of electrical current. The body wall is porous to allow ingress of gas and is preferably formed of a titanium suboxide of the formula TiO_x where is 1.55 to 1.95.

When electrode bodies are required to be supported at their extreme ends, in electrochemical cells, rather than being encased in concrete, it is often necessary to provide specially shaped end caps. If these are simply attached with adhesives, the adhesives often fail in the extremely aggressive electrochemical environment. If mechanical means of attachment is used, then the electrode material itself is subject to mechanical forces, which may damage the body if the material is brittle, since the wall of the body will not withstand high compressive and torsional forces when end caps are inserted. Such strains arise for example when too much force is used to tighten up nuts and can cause the body to fracture.

It is one object of the invention to provide an electrode having a generally tubular body and end fittings which are easy to assemble and fix in place without any major mechanical stresses being applied to the body. It is another object of the invention to provide such an

electrode in which the end fittings tend to align an elongate support for the internal electrode.

According to the present invention, there is provided an electrode for use in an electrochemical process, comprising a generally tubular and conductive electrode body having an internal surface and an external surface and being formed of a brittle material, and an elongate rod having at least one end fitting, the elongate rod being positioned within the tubular electrode body; and wherein a power supply conductor is present in the annulus between the rod and the internal surface and in contact with the internal surface at a plurality of spaced apart locations along the tubular electrode body.

According to the present invention, there is also provided an electrode comprising a generally tubular electrode body, an elongate support member extending axially through the electrode body, spacer means between the electrode body and the support member for maintaining the inner surface of electrode body spaced from the support member, and electrical conductor means in the space between the support member and said inner surface and electrically connected to said inner surface, characterised in that the electrical body is made of relatively brittle material and, to support the electrode body while limiting radial and axial force applied thereto, said spacer means comprises at least one spacer member engaged with a respective end of the electrode body via resilient engagement means and coupled to the support member by locating means defining the position of the spacer member along the support member, said electrical conductor means comprising resilient connection means for resiliently contacting the inner surface of the electrode body at a plurality of positions axially spaced along the electrode body.

Preferably an end fitting in the form of a cap is present at one or both ends of the tubular body to close one or both ends, the or each cap having an inner end portion shaped to hold and contribute to the centralisation of the cap and engage the inner surface of the end

portion of the body without stressing the body. Most preferably the engaging means of the inner portions comprises radially spaced apart flexible flutes or vanes. Most preferably the flutes or vanes are at an angle to the true radial direction such that once compressed the flutes or vanes will be bent in the same radial direction to further assist the centralisation. Most preferably the flutes or vanes are sufficiently tough and flexible to provide an element of flexibility in the axis of the end cap with respect to the axis of the tubular body, thus reducing bending stresses on the body, and also allowing the use of bodies with slightly variable internal diametric tolerances.

It is also preferred that the inner end portions of the caps each define a socket to receive an end portion of the rod to space the two end caps at an appropriate distance to ensure that

axial compressive forces are transmitted along the rod rather than along the body. Preferably, the ends of the rods are provided with a clip system in each socket so that once engaged the rod cannot be withdrawn. In this way any axial extensional forces will tend to be are borne by the rod instead of the cylindrical body.

Preferably, all the components of the fittings can be manufactured by injection moulding of thermoplastic polymers which is a cheap high volume method, and thus results in cost effective electrodes.

The body may be formed of an electrically conductive ceramic material which will tend to be brittle. The body may be inherently electrically conductive or it may be covered with a coating of such a material.

The tubular body may be of a suitable shape, e.g. generally cylindrical or prismatic.

An electrode of the invention is very versatile and may be used as an anode or a cathode in many electrochemical reactions such as:

electrochemical water sterilisation;

electrochemical destruction of organics compounds such as pesticides and or pseudo-oestrogenic compounds in water;

electrochemical treatment of sewage;

electrochemical synthesis of fine chemicals; and

electrochlorination of water for, for instance, swimming pools.

According to the present invention, there is also provided a method of assembling the electrode, comprising locating at least one fitting on the rod, coiling the power supply conductor about the rod, urging the tubular body onto the sub-assembly so formed and allowing the coil to relax to contact the inner surface at a plurality of spaced apart locations along the tubular body.

In order that the invention may be well understood it will now be described by way of example only with reference to the accompanying diagrammatic drawings, in which:

Figure 1 is an exploded perspective view of one anode assembly of the invention;

Figure 2 is a longitudinal sectional view of the anode of Figure 1;

Figure 3A is a perspective view of one end cap and Figure 3B is an end view thereof;

Figure 4 is a perspective view of an extension cap, and

Figure 5 is an enlarged view of the area on Figure 2 marked 'V' and showing the end of the anode from which a wire emerges.

The anode assembly includes two elongate tubes 1, 1A arranged end to end. The tube 1 is made of titanium suboxide available under the registered trade mark EBONEX. The tube

1A is moulded of a plastics. The wall of the tube 1 is solid along its length, whereas the tube 1A is solid save for a slot 2 at one end 3. The tube 1 contains an elongate support rod 4 which holds two caps E1, E2 in place, as will be explained below. A conductor wire 5 formed of titanium spring metal is present as a spiral about the rod 4 and has a straight tail 6 which emerges from the tube 1A at the end 3. This will be explained in better detail below.

As shown in Figures 3A and 3B, the cap E1 consists of a cylinder having two longitudinal end portions 10, 11, separated by a shoulder 12. End portion 10 is shorter than the end portion 11. Six vanes are shown, but the number is not critical. The vanes are arranged so that they will flex in the same direction. The end portion 11 has inwardly turned reverse facing longitudinal spring tongues 15 located to be snap-engaged in slots 16 near the ends of the rod 4. An inner partition 17 is present to separate the two end portions and an inner shoulder 18 is present in the end portion 11, to act as an abutment for the end of the rod 4 so that the tongues 15 will align with the slots 16. The cap E1 is received in and engages in one end of the tube 1.

The second end cap E2, has the same vane or fluting as E1, but differs in the presence of hole 19, whereby the electrical connection wire passes through E2. The end portion 10 of E2 is illustrated to be as interference fit with tube 1A. (This joint however could be made with an adhesive or with a friction or other welding technique). Tube 1A is present in this illustration to provide a smooth seal surface to allow the electrode to pass through the wall of the electrochemical cell, and so that the electrical connection from the power supply is outside the cell and easy to access.

The wire 6 passes through the end of tube 1A through a hole, which is provided with a sealing system, such as is illustrated. Sealant can be injected into hole 2 and fill the annulus around the wire preventing any leakage of electrolyte through the end of tube 1A.

The electrical connection can be made directly to the exposed end of wire 6, but in this example, the tube 1A is provided with a short threaded stud 25, around which can be bent

the end of the wire 5, supported by washer 27, to present a neat terminal for the electrical connection.

Typically the electrode is assembled by inserting the straight part 6 of wire 5 through hole 19 in E2 and then pressing tube 1A into place on E2 with wire 5 extending through the tube 1. Rod 4 is then placed into the socket in E2 and engaged with the clip. An assembly tool, not shown, is then used to "wind up" the spring part of wire 5, thus reducing its diameter such that the body 1 can be slid over it and onto the flutes of E2 probably with a slight rotation. Because the vanes flex in the same direction, they will tend to bend and reduce the overall diameter of the cap and act as a self-centring system. The spring is then released and allowed to engage on the internal surface of tube 1. E1 is then pressed into place, also with a slight rotational movement until it is captured by the clip engaging into rod 4, also with the flutes acting as a self-centring system similar to E2. Washer 26 is added and the wire bent around stud 25. Finally sealant is injected into slot 2.

The flutes can also accommodate tubes of different diameters, as well as some flexibility to eliminate bending stresses.

The support rod is positively engaged at both ends, which capture the rod and eliminates both compressive and extensive forces on the ceramic tube.

Because all the parts lock together mechanically, there is no need for adhesives.

WHAT IS CLAIMED IS:

1. An electrode for use in an electrochemical process, comprising a generally tubular and conductive electrode body having an internal surface and an external surface and being formed of a brittle material, and an elongate rod having at least one end fitting, the elongate rod being positioned within the tubular electrode body; and wherein a power supply conductor is present in the annulus between the rod and the internal surface and in contact with the internal surface at a plurality of spaced apart locations along the tubular electrode body.

2. An electrode according to claim 1, wherein the tubular body is formed of a brittle ceramic material.

3. An electrode according to claim 1 or 2, wherein the tubular body is formed of an electrically conductive ceramic material or has a coating of electrically conductive material thereon.

4. An electrode according to any one of claims 1 to 3, wherein the at least one fitting comprises a cap present at one of the ends of the body to close that end, the cap having an inner end portion shaped to hold and contribute to centralisation of the end cap within the body.

5. An electrode according to claim 4, wherein at least one cap is present at one of the ends to close that end, the cap having means to engage the inner surface of the end portion of the body without stressing the body circumferentially or when bending.

6. An electrode according to claim 4 or 5, wherein the engaging means of the inner portions comprises radially spaced apart flexible flutes or vanes.

7. An electrode according to claim 6, wherein the vanes are arranged to flex in the same radial direction.

8. An electrode according to any of claims 1 to 7, wherein the cap has a socket to receive the respective end of the rod.

9. A method of assembling an electrode according to claim 1, the method comprising locating an end fitting on the rod, coiling the power supply conductor about the rod, urging the tubular body onto the sub-assembly so formed and allowing the coil to relax to contact the inner surface at a plurality of spaced apart locations along the tubular body.

10. The use of an electrode according to any one of claims 1 to 8 to carry out an electrochemical reaction.

11. An electrode comprising a generally tubular electrode body, an elongate support member extending axially through the electrode body, spacer means between the electrode body and the support member for maintaining the inner surface of electrode body spaced from the support member, and electrical conductor means in the space between the support member and said inner surface and electrically connected to said inner surface, characterised in that the electrical body (1) is made of relatively brittle material and, to support the electrode body while limiting radial and axial force applied thereto, said spacer means (E1, E2) comprises at least one spacer member engaged with a respective end of the electrode body via resilient engagement means and coupled to the support member (4) by locating means (15) defining the position of the spacer member along the support member, said electrical conductor means comprising resilient connection means (5) for resiliently contacting the inner surface of the electrode body at a plurality of positions axially spaced along the electrode body.

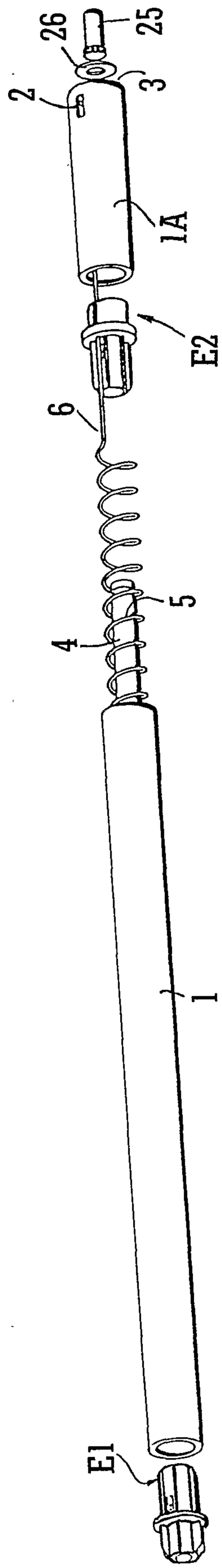

FIG. 1

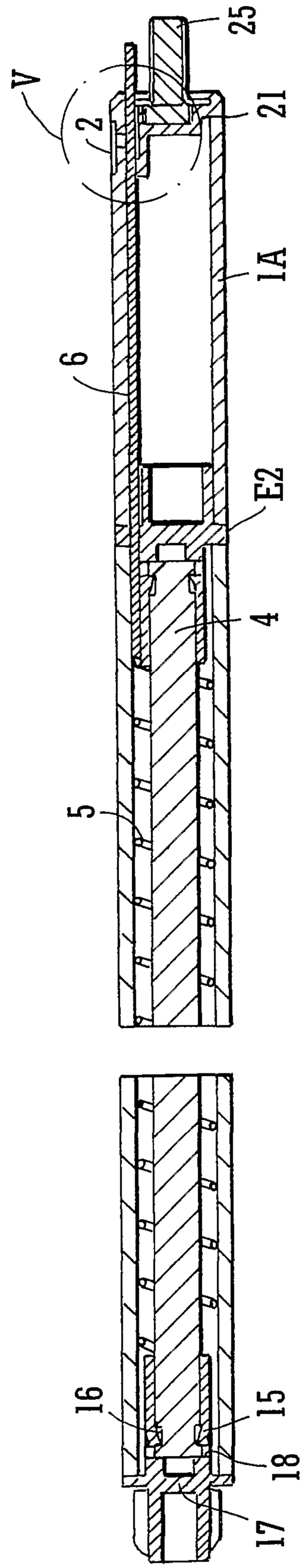

FIG. 2

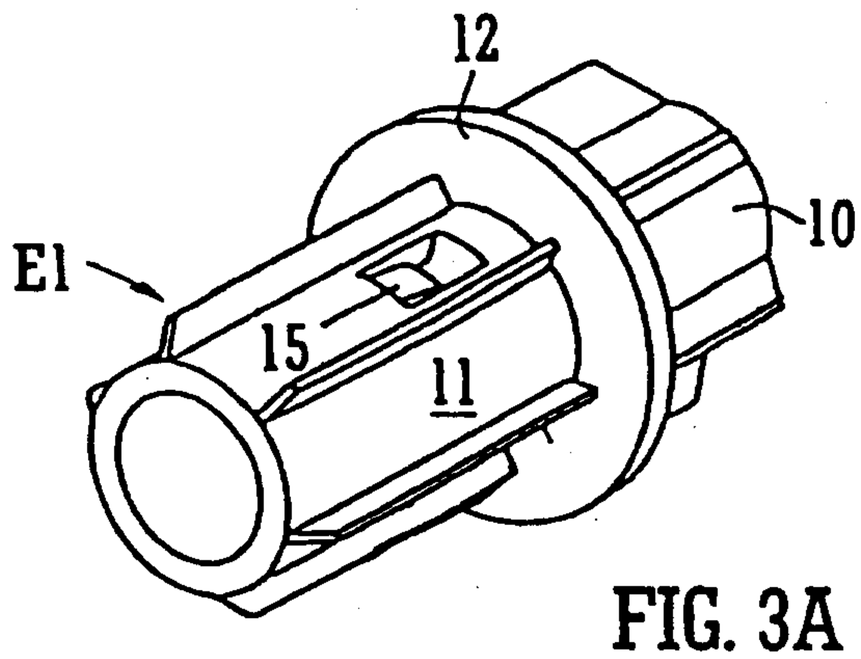

FIG. 3A

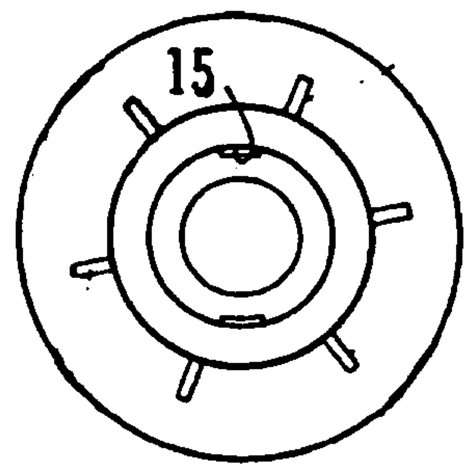

FIG. 3B

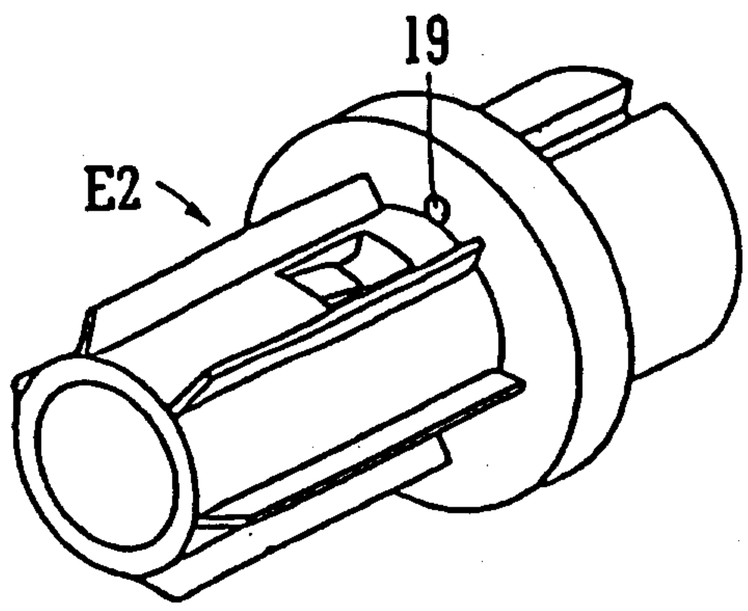

FIG. 4

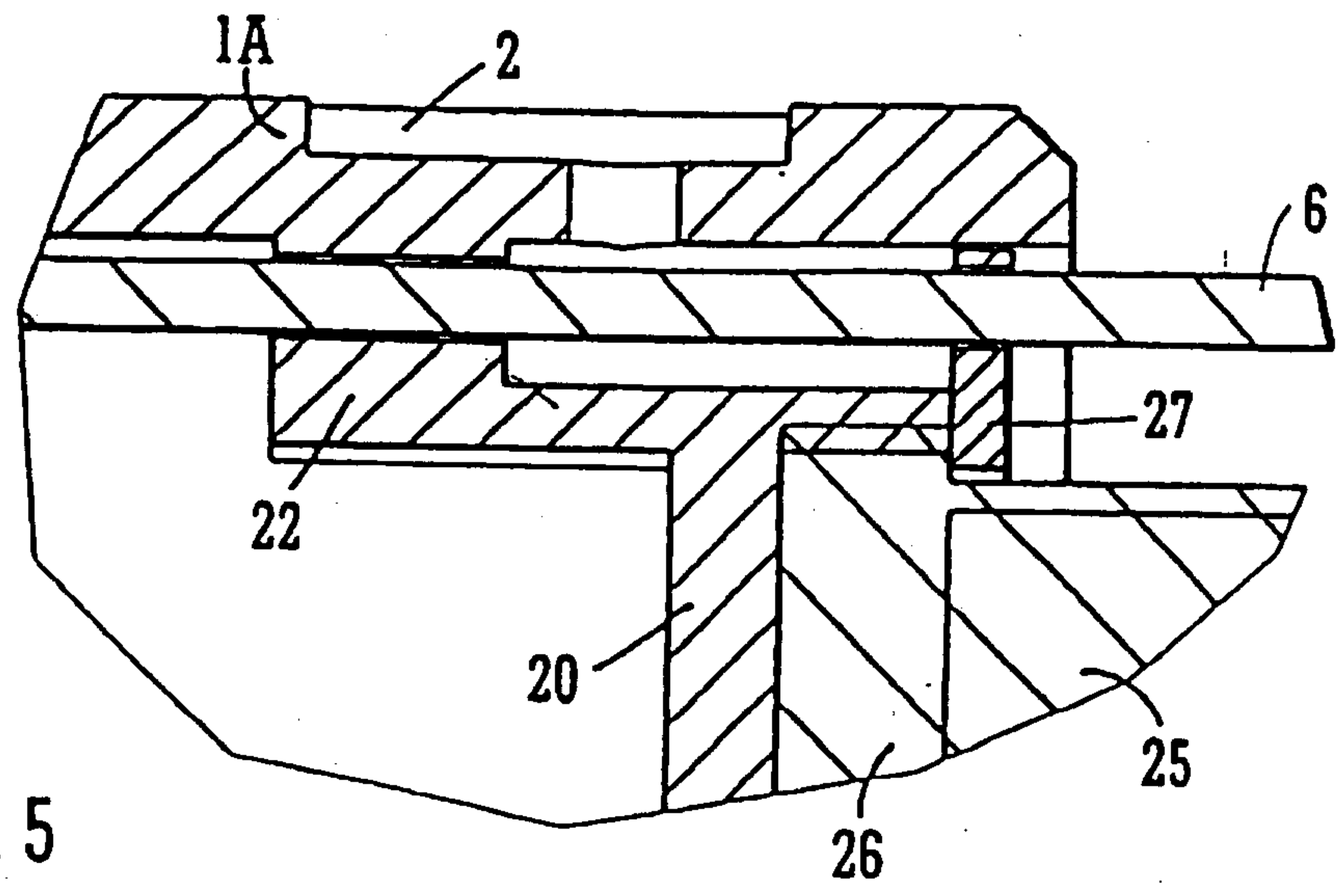

FIG. 5

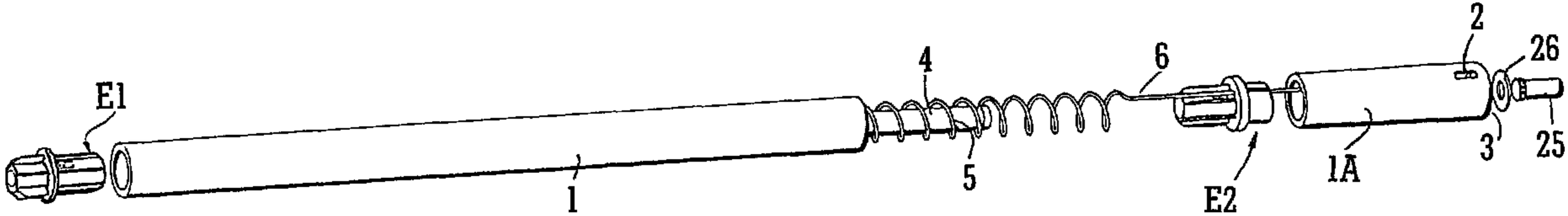
E1
1
4
5
6
E2
1A
2
3
26
25