No. 688,629. Patented Dec. 10, 1901.

E. W. GAILEY.

TROLLEY WHEEL GUARD.

(Application filed May 13, 1901.)

(No Model.)

Fig. 1.

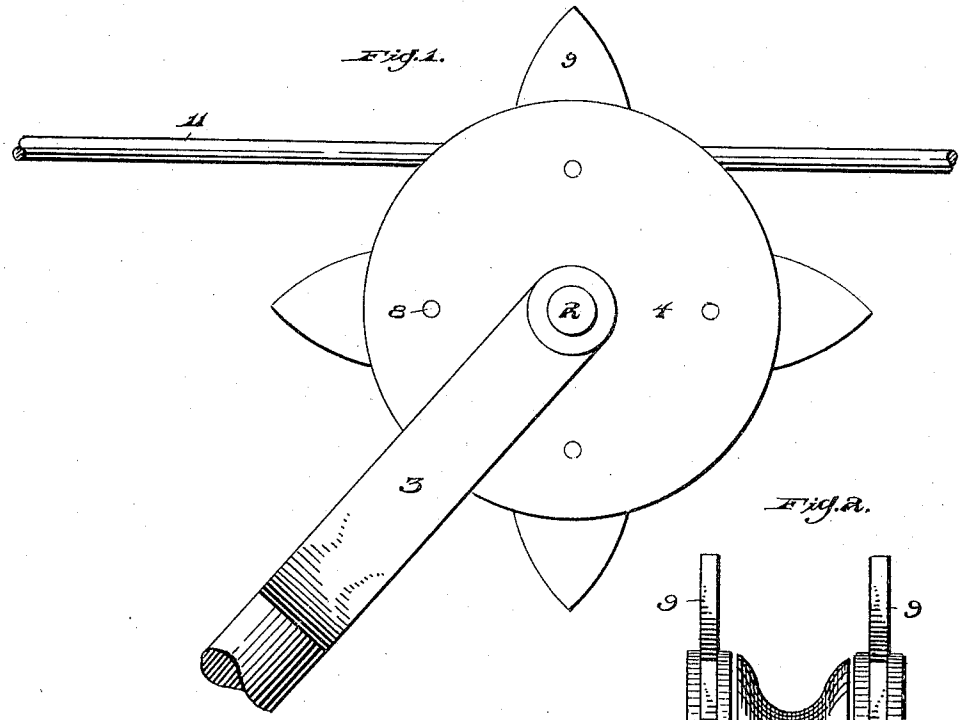

Fig. 3

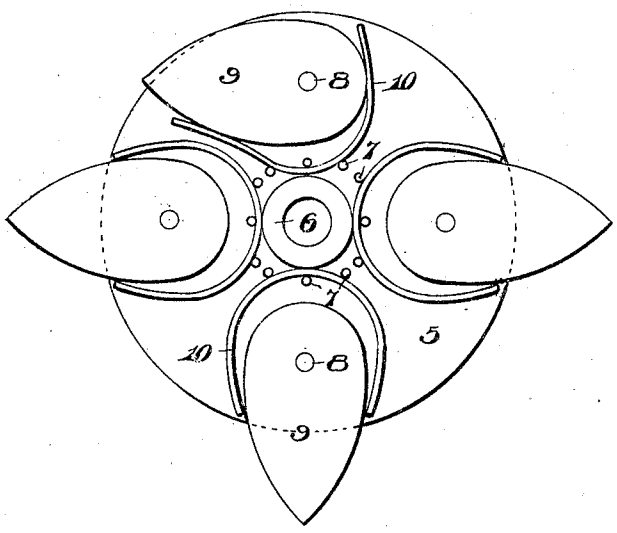

Fig. 2.

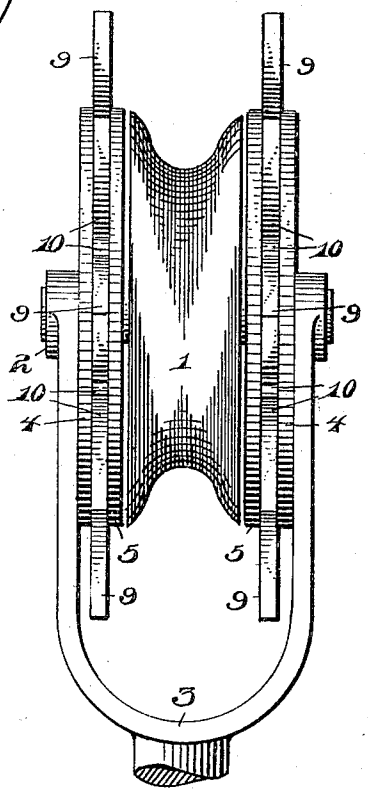

Witnesses:
J. P. Appleman.
M. Hunter

Inventor
E. W. Gailey
By
O. D. Lewis
Atty

THE NORRIS PETERS CO., PHOTO-LITHO., WASHINGTON, D. C.

UNITED STATES PATENT OFFICE.

EDWARD W. GAILEY, OF ALLEGHENY, PENNSYLVANIA.

TROLLEY-WHEEL GUARD.

SPECIFICATION forming part of Letters Patent No. 688,629, dated December 10, 1901.

Application filed May 13, 1901. Serial No. 60,058. (No model.)

To all whom it may concern:

Be it known that I, EDWARD W. GAILEY, a citizen of the United States of America, residing at Allegheny, in the county of Allegheny and State of Pennsylvania, have invented certain new and useful Improvements in Trolley-Wheel Guards; and I do hereby declare the following to be a full, clear, and exact description thereof, reference being had to the accompanying drawings, which form a part of this specification.

This invention relates to certain new and useful improvements in trolley-wheel guards.

The invention has for its object the provision of a means for preventing the trolley-wheel from jumping the wire when in use.

With the above object in view the invention finally consists of the novel construction, combination, and arrangements of parts to be hereinafter more specifically described.

In describing the invention in detail reference is had to the accompanying drawings, forming a part of this specification, and wherein like figures of reference indicate similar parts in the several views shown, in which—

Figure 1 is a side view of my improved trolley device as it would appear when in actual use. Fig. 2 is a front view of the same. Fig. 3 is a side view of a portion of my improved trolley-guard with one of the guard-points turned down.

To put my invention into practice, I provide the trolley-wheel 1, shaft 2, and forked support 3, all of which are of the ordinary form.

Secured fast to the shaft 2 and between the forked portion of the support and the sides of the trolley-wheel, so that they may revolve with the said wheel, are my improved guards, which consist of the metal disks 4 and 5, the inner ones 5 being provided with the bosses 6 and pins 7 and 8. Loosely pivoted upon the pins 8 are the egg-shaped guards 9, the outer ends of which extend out a suitable distance beyond the flanges of the wheel.

Secured between the edges of the bosses 6 and projecting pins 7 are the V-shaped springs 10, the ends of which press against the edges of the guards and serve to retain them in position, and should they come into contact with the guy-wires they will be free to move downward between or flush with the flanges, as shown at the upper portion of Fig. 3, and when passed beyond the guy-wire the springs will force them back to their former position.

The trolley-wire is designated as 11.

If it is desirable, a contact-strip may be attached to the supporting-prong and arranged to press upon the trolley-wheel, such as in common use, to aid in conducting the current from the wheel to the pole.

Slight changes may be made in the construction of my improvements without departing from the general spirit of my invention.

Having thus fully shown and described my invention, what I claim as new, and desire to secure by Letters Patent, is—

1. In combination with a trolley-wheel and the forked support thereof, of a pair of circular metal disks arranged upon the axle of the trolley-wheel and between each side of the wheel and the pronged support, each pair of disks having a series of independent projecting guard-pieces which are secured at their inner ends between the said disks and having their outer ends extending out a suitable distance beyond the edges of the said disks and wheel as shown and for the purpose specified.

2. In combination with a trolley-wheel and the forked support thereof, of a pair of circular metal disks arranged upon the axle of the trolley-wheel and between each side of the wheel and the pronged support, so that they may revolve with the wheel, each pair of disks being provided with a series of independent spring-actuated guard-pieces which are pivotally secured at their inner ends to the said disks and adapted to operate substantially as shown and described.

In testimony whereof I have hereunto affixed my signature in the presence of two subscribing witnesses.

EDWARD W. GAILEY.

Witnesses:
JOHN GROETZINGER,
M. HUNTER.