United States Patent

[11] 3,631,546

[72] Inventor Kurt Arnold Eliasson
Alingsas, Sweden

[21] Appl. No. 16,724
[22] Filed Mar. 5, 1970
[45] Patented Jan. 4, 1972
[73] Assignee AB Hydraul-Verken
Alingsas, Sweden
[32] Priority Mar. 13, 1969
[33] Sweden
[31] 3514/69

[54] **DEVICE FOR OPTIONAL COUPLING OF A STRETCHER WITH DIFFERENT IMPLEMENTS**
4 Claims, 5 Drawing Figs.

[52] U.S. Cl. ..... 5/81, 5/86, 214/38 CC, 269/323
[51] Int. Cl. A61g 7/10, A61g 1/02, A47b 83/04
[50] Field of Search ..... 5/81, 82, 86, 87, 89; 269/17, 79, 229, 235, 236, 323–328; 214/38 CC, 38 D

[56] **References Cited**

UNITED STATES PATENTS

2,680,459	6/1954	Dodson et al.	269/235
3,451,070	6/1969	Danielson	5/86 X
2,812,974	11/1957	McHugh	214/38 CC
3,270,353	9/1966	Berthelsen et al.	5/86 X

Primary Examiner—Casmir A. Nunberg
Attorney—Ernest F. Marmorek

ABSTRACT: This invention concerns a device for optionally coupling a stretcher with different implements permitting the releasing of the stretcher from one implement and the coupling of the stretcher with another implement, to which it is to be transferred, to be performed simultaneously without passing an intermediate position in which the stretcher is disconnected from both implements. For this purpose the invention is characterized in that the stretcher has two transverse cylinders, of which one is mounted for eccentric rotation so as to permit to vary the space between the cylinders by rotation of the eccentric cylinder. One of the implements has a member with two cylindrical recesses in its end edge portions to be engaged by the cylinders in their closest position. The other implement has a fork-shaped support with cylindrical recesses in the sides of the fork legs to be engaged by the cylinders in their most spaced-apart position, the eccentricity of the eccentric cylinder and the spacing of the cylinders and recesses being such that when transferring the eccentric cylinder from its engagement with one implement to the other, said other implement is at least partially engaged before the first implement is entirely released.

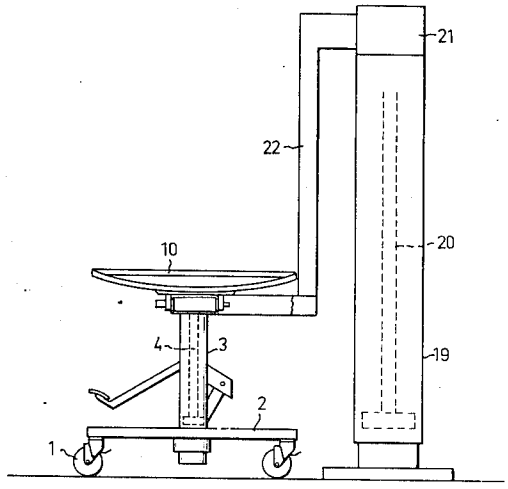

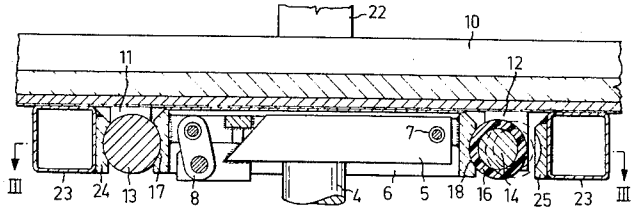

FIG.1

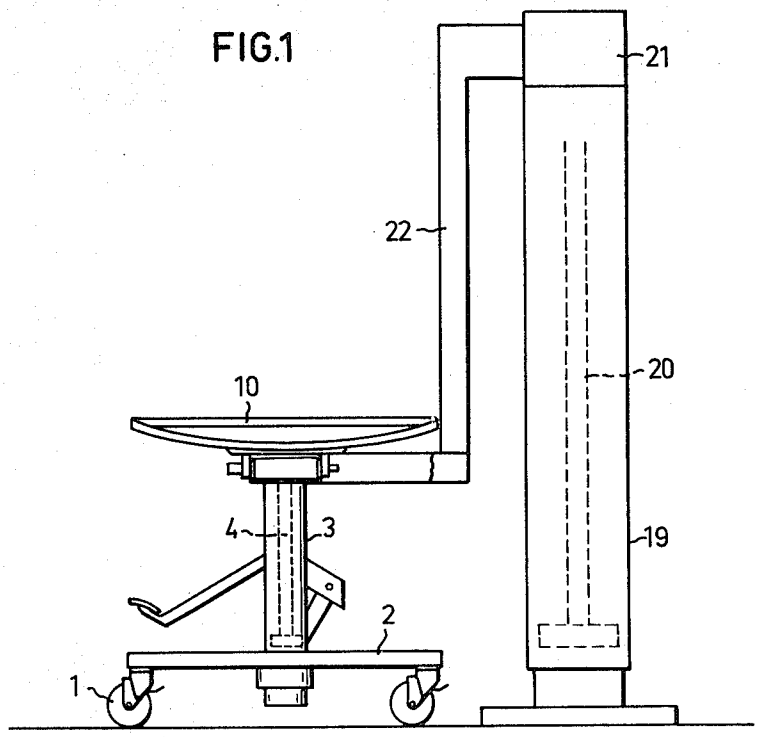

FIG.5

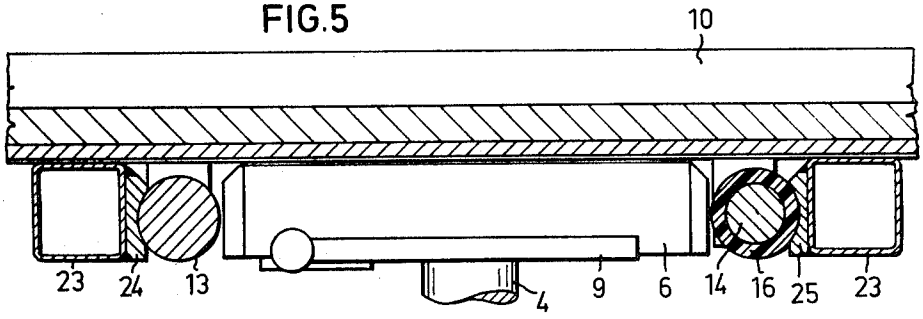

FIG.4

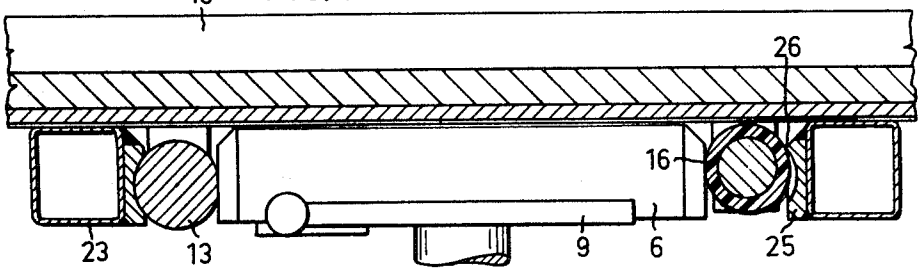

INVENTOR:
Kurt A. Eliasson,
BY
Kenneth A. Marnoch,
His Attorney.

FIG.2

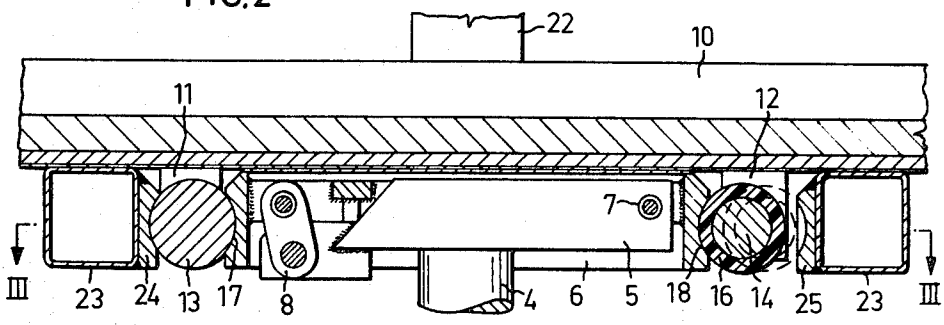

FIG.3

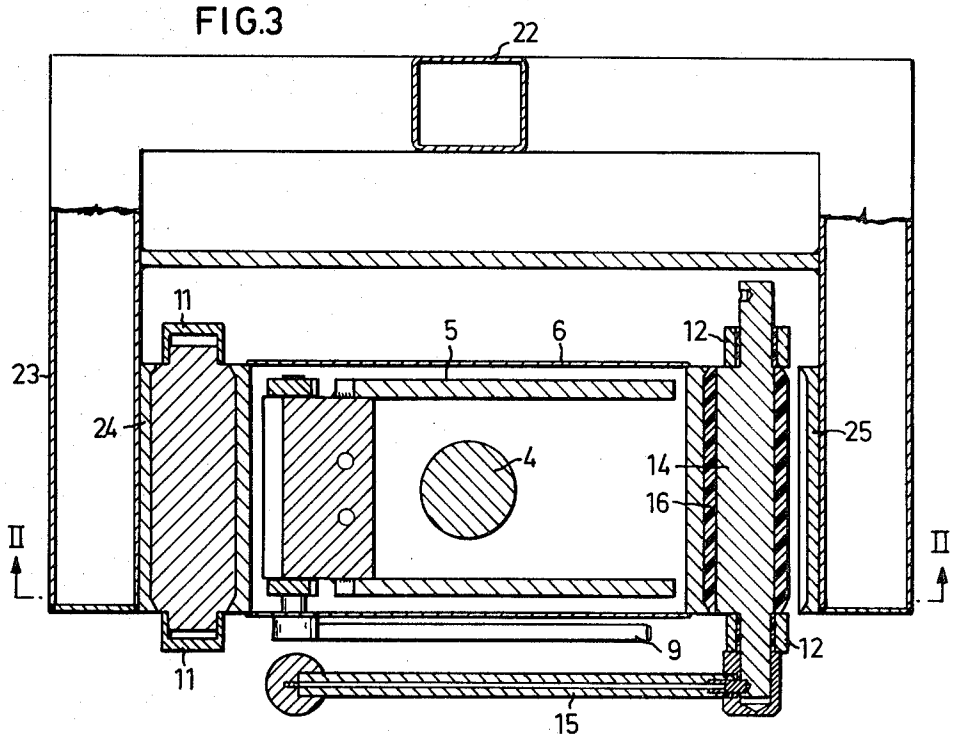

INVENTOR:
Kurt A. Eliasson,
BY
Leonard A. Marmorek,
His Attorney.

DEVICE FOR OPTIONAL COUPLING OF A STRETCHER WITH DIFFERENT IMPLEMENTS

The present invention concerns a device for the optional coupling of a stretcher with different implements, such as a stretcher carriage and a lifting device. In the care in a hospital, in order to permit the transfer of a patient from a bed to a bath or to an operation table it is of greatest importance that the transfer can be made without the risk that the stretcher can loosen or be tilted, especially for the transfer from one implement to another. The transport from one section of a hospital to another is always performed by means of a stretcher carriage mounted on wheels, on which the stretcher is locked into position. In order to enable the stretcher to be sunk into a bath it is necessary to transfer it to a lifting device. It is a purpose of the invention to provide a coupling device so constructed that the stretcher cannot be released from one implement before coupling members on the other implement have taken over the locking action and that the releasing and locking can be effected with one single movement without any unstable intermediate position.

The invention is characterized in that the stretcher has transverse cylinders, of which one is journaled excentrically so that the space between the sides of the cylinders turned away from or facing each other can be varied, that the one implement has a plate or frame or the like, the end edges of which have recesses for the cylinders, and that the other implement has a fork-shaped support with corresponding recesses on the sides of the fork legs facing each other, the cylinders, upon rotation of the excentric cylinder in one direction or the other, optionally engaging and clamping the frame between them or gripping the fork legs simultaneously as the stretcher is released from the fork legs or the frame, respectively.

The invention is described in the following with reference to the accompanying drawings, in which

FIG. 1 is a side view of a stretcher placed on a stretcher carriage in position ready for the transfer to a lifting device.

FIG. 2 shows a section along line II—II in FIG. 3 through the locking device and the cooperating parts on the stretcher carriage and the lifting device.

FIG. 3 shows a section along line III—III in FIG. 2.

FIGS. 4 and 5 show sections corresponding to FIG. 2 but with the locking device in different coupling positions.

The stretcher carriage comprises a frame 2 mounted on wheels 1 and comprising a vertical standard 3 formed as a hydraulic cylinder with a piston rod 4, which can be hoisted and lowered by means of a pump mounted on the frame. On the upper end of the piston rod is mounted a plate 5 supporting a frame 6 which can be swung relative to the plate about a pivot 7 mounted on its one end edge, whereby an inclination of a few degrees can be obtained by means of a knee link 8 provided at the other end edge, and permitting to lower the frame 6 onto the plate 5 or to maintain the frame 6 in an inclined position by means of a lever 9.

The stretcher 10 has in its median part bearing supports 11, 12 extending downwards from the underside, in which transverse cylinders 13, 14 are rotatably mounted. One cylinder 14 is excentric relative to its axis of rotation and is rotatable by means of an operating lever 15. The cylinders 13, 14 are preferably of steel and the cylinder 14 is surrounded by a sleeve 16 freely rotatable thereon. This sleeve can be of resilient material, such as rubber, plastic material or the like. By rotating the excentric cylinder in one direction or the other, the space between the cylinders can be increased or reduced.

In the end edge faces of the frame 6 there are shallow cylindrical recesses 17, 18 for the cylinders 13, 14, the space between the recesses being somewhat less than the space between the sides of the cylinders facing each other when the excentric cylinder 14 is in its middle position.

The lifting device shown in FIG. 1, which can be used for lowering the stretcher into a bath or the like, comprises a vertical hydraulic cylinder 19 enclosing a piston with a piston rod 20 supporting at its upper end a rotatable head 21 with a downwards extending supporting arm 22, formed at its lower end into a fork with horizontal fork legs 23 presenting cylindrical recesses 24, 25 for the cylinders 13, 14 on their sides facing each other, the space between said recesses being somewhat larger than the distance between the sides of the cylinders turned away from each other when the excentric cylinder is in its middle position.

The device just described works as follows. When the stretcher is to be coupled to the stretcher carriage the excentric cylinder 14 is turned by means of the lever 15 so that the distance between the rollers becomes larger than the space between the end edges of the frame 6 so that the stretcher can be freely put down onto the latter with the cylinders facing the recesses 17, 18. When the excentric 14 is turned and the space between the cylinders is thereby reduced, the cylinders engage the recesses 17 and 18 and are pressed against the frame 6 on the stretcher carriage, so that the stretcher is fixedly secured thereon.

For the transfer of the stretcher 10 from the stretcher carriage to the lifting device, the fork legs 23 are exactly adjusted at the same level as the cylinder 13, 14 and the stretcher carriage is moved in over the fork legs so that the recesses 24, 25 are placed opposite the cylinders, which can be facilitated by means of an abutment provided on the supporting arm. In the beginning of the turning of the operating lever 15, the grip on the frame 6 is released but since the recesses are cylindrical the stretcher cannot tilt and upon continued turning of the lever the sleeve 16 comes into contact with the edge of the recess 25 on the leg 23 of the supporting arm so that the stretcher is moved longitudinally and the cylinder 13 engages the recess in the abutment surface 24 before the grip on the frame 6 is entirely released (FIG. 3). The lever 15 is turned further on until the cylinders have taken their positions illustrated in FIG. 4, in which they are pressed outwards against the legs 23 and maintain the stretcher 10 fixedly engaged simultaneously as the latter is entirely released from the stretcher carriage and the latter can be moved away.

Since the excentric cylinder 14 during rotation moves in a circular path and the contact with the corresponding recess is made first with the border edge 26 thereof, the torque necessary for turning the cylinder 14 into its end position would become very large without the sleeve 16, which upon contact with the edge 26 is stopped, so that the excentric cylinder 14 upon further rotation slides within the sleeve 16, which thereby can roll down into the recess 25. The coupling is therefore effected smoothly and without the torque becoming too large in spite of a great locking force. The conditions are the same when the cylinders are pressed against the frame 6.

The locking device above described is very simple and reliable and permits a rapid transfer from one implement to another, there being no risk for the stretcher in any position to be released without a corresponding locking being simultaneously effected.

What I claim is:

1. A device for the optional coupling of a stretcher to different implements comprising, in combination,

two locking cylinders secured to said stretcher, and substantially parallel to each other,

at least one of said cylinders being excentrically rotatable, so that the distance between the cylinders is variable,

an implement including an inner supporting member defining first recesses for the cylinders, the distance between said first recesses being such as to allow a passage of said inner supporting member between said locking cylinders when said excentrically rotatable cylinder is turned away from the other cylinder, and locking said inner supporting member when said excentrically rotatably cylinder is turned towards said other cylinder, and another implement including a fork-shaped supporting member having corresponding second recesses for said cylinder on the sides of the fork legs turned towards each other, the distance between said second recesses being such that said cylinders upon rotation of the excentrically rotatable

cylinder in one direction fixedly engage the fork legs simultaneously as the stretcher is released from said inner supporting member.

2. A device as claimed in claim 1, characterized in that the excentric cylinder is enclosed in a sleeve freely rotatable thereon.

3. A device as claimed in claim 1, characterized in that said inner supporting member includes a plate, a frame pivotally

mounted on said plate, so that said frame can be inclined with respect to said plate, and the ends of said frame being provided with said first recesses.

4. A device as claimed in claim 3, wherein said inner supporting member is operatively mounted on a stretcher carrier, and said fork-shaped supporting member is operatively connected to a stretcher-lifting device.

* * * * *