(12) INTERNATIONAL APPLICATION PUBLISHED UNDER THE PATENT COOPERATION TREATY (PCT)

(19) World Intellectual Property Organization
International Bureau

(43) International Publication Date
17 February 2011 (17.02.2011)

PCT

(10) International Publication Number
WO 2011/019544 A3

(51) International Patent Classification:
H01R 13/646 (2011.01) *H01R 12/58* (2011.01)
H01R 13/11 (2006.01)

(21) International Application Number:
PCT/US2010/044222

(22) International Filing Date:
3 August 2010 (03.08.2010)

(25) Filing Language: English

(26) Publication Language: English

(30) Priority Data:
12/538,778 10 August 2009 (10.08.2009) US

(71) Applicant *(for all designated States except US)*: **3M INNOVATIVE PROPERTIES COMPANY** [US/US]; 3M Center, Post Office Box 33427, Saint Paul, Minnesota 55133-3427 (US).

(72) Inventors: **FELDMAN, Steven,**; 3M Center, Post Office Box 33427, Saint Paul, Minnesota 55133-3427 (US). **BARR, Alexander, W.**; 3M Center, Post Office Box 33427, Saint Paul, Minnesota 55133-3427 (US). **CASTIGLIONE, Joseph, N.**; 3M Center, Post Office Box 33427, Saint Paul, Minnesota 551333-427 (US).

(74) Agents: **KUSTERS, Johannes P., M.** et al.; 3M Center Office of Intellectual Property Counsel Post Office Box 33427, Saint Paul, Minnesota 55133-3427 (US).

(81) Designated States *(unless otherwise indicated, for every kind of national protection available)*: AE, AG, AL, AM, AO, AT, AU, AZ, BA, BB, BG, BH, BR, BW, BY, BZ, CA, CH, CL, CN, CO, CR, CU, CZ, DE, DK, DM, DO, DZ, EC, EE, EG, ES, FI, GB, GD, GE, GH, GM, GT, HN, HR, HU, ID, IL, IN, IS, JP, KE, KG, KM, KN, KP, KR, KZ, LA, LC, LK, LR, LS, LT, LU, LY, MA, MD, ME, MG, MK, MN, MW, MX, MY, MZ, NA, NG, NI, NO, NZ, OM, PE, PG, PH, PL, PT, RO, RS, RU, SC, SD, SE, SG, SK, SL, SM, ST, SV, SY, TH, TJ, TM, TN, TR, TT, TZ, UA, UG, US, UZ, VC, VN, ZA, ZM, ZW.

(84) Designated States *(unless otherwise indicated, for every kind of regional protection available)*: ARIPO (BW, GH, GM, KE, LR, LS, MW, MZ, NA, SD, SL, SZ, TZ, UG, ZM, ZW), Eurasian (AM, AZ, BY, KG, KZ, MD, RU, TJ, TM), European (AL, AT, BE, BG, CH, CY, CZ, DE, DK, EE, ES, FI, FR, GB, GR, HR, HU, IE, IS, IT, LT, LU, LV, MC, MK, MT, NL, NO, PL, PT, RO, SE, SI, SK, SM, TR), OAPI (BF, BJ, CF, CG, CI, CM, GA, GN, GQ, GW, ML, MR, NE, SN, TD, TG).

Declarations under Rule 4.17:

[Continued on next page]

(54) Title: ELECTRICAL CONNECTOR SYSTEM

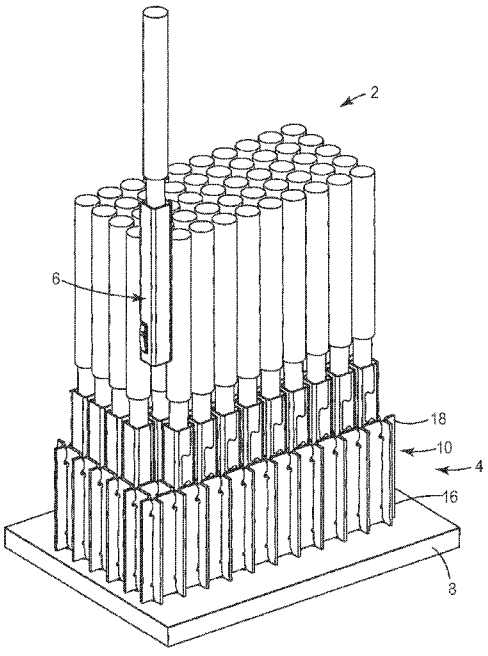

FIG. 1

(57) Abstract: An electrical connector system includes an electrical connector assembly and an electrical connector. The electrical connector assembly includes an insulative carrier and a plurality of termination devices supported in the insulative carrier. Each termination device includes an electrically conductive outer shield element having a front end and a back end, the shield element having a latch member extending therefrom and a plurality of termination legs extending from the back end, an insulator disposed within the shield element, and a socket contact supported within and electrically isolated from the shield element by the insulator. The socket contact is configured for making electrical connections through the front end and back end of the shield element and has a termination end extending beyond the back end of the shield element. The electrical connector includes a plurality of interlocking plates defining a plurality of cavities and at least one electrical contact positioned within a cavity. Each cavity is sized for accepting a termination device. At least one of the plurality of interlocking plates is electrically conductive. The at least one electrical contact is electrically isolated from the interlocking plates and configured to mate with a socket contact of the termination device. The electrical connector assembly and the electrical connector are configured such that the socket contact of each termination device makes electrical contact with a corresponding electrical contact of the electrical connector and the shield element of each termination device makes electrical contact with the interlocking plates of the electrical connector when the electrical connector assembly and the electrical connector are in a mated configuration.

WO 2011/019544 A3

— *as to applicant's entitlement to apply for and be granted a patent (Rule 4.17(ii))*

— *as to the applicant's entitlement to claim the priority of the earlier application (Rule 4.17(iii))*

Published:

— *with international search report (Art. 21(3))*

— *before the expiration of the time limit for amending the claims and to be republished in the event of receipt of amendments (Rule 48.2(h))*

(88) Date of publication of the international search report:
28 April 2011

INTERNATIONAL SEARCH REPORT

International application No.
PCT/US2010/044222

A. CLASSIFICATION OF SUBJECT MATTER

H01R 13/646(2011.01)i, H01R 13/11(2006.01)i, H01R 12/58(2011.01)i

According to International Patent Classification (IPC) or to both national classification and IPC

B. FIELDS SEARCHED

Minimum documentation searched (classification system followed by classification symbols)

H01R 13/646; H01R 13/648; H01R 13/658; H01R 43/00

Documentation searched other than minimum documentation to the extent that such documents are included in the fields searched

Korean utility models and applications for utility models

Japanese utility models and applications for utility models

Electronic data base consulted during the international search (name of data base and, where practicable, search terms used)

eKOMPASS(KIPO internal) & Keywords:pin,shield,rotate,connector

C. DOCUMENTS CONSIDERED TO BE RELEVANT

Category*	Citation of document, with indication, where appropriate, of the relevant passages	Relevant to claim No.
X A	US 2007-0197095 A1 (STEVEN FELDMAN et al.) 23 August 2007 See paragraph [0037] - paragraph [0039] and figures 1-5.	1-7,9,10 8
A	US 5795191 A1 (PREPUTNICK; GEORGE et al.) 18 August 1998 See column 3, line 56 - column 4, line 10 and figure 1.	1-10
A	JP 09-007697 A (SANKYO KASEI CO LTD) 10 January 1997 See paragraph [0007] and figures 1-4.	1-10
A	US 5066236 A1 (BROEKSTEEG; JOHANNES M.) 19 November 1991 See column 3, line 28 - column 4, line 57 and figures 1, 2.	1-10

☐ Further documents are listed in the continuation of Box C.

☒ See patent family annex.

* Special categories of cited documents:

"A" document defining the general state of the art which is not considered to be of particular relevance

"E" earlier application or patent but published on or after the international filing date

"L" document which may throw doubts on priority claim(s) or which is cited to establish the publication date of citation or other special reason (as specified)

"O" document referring to an oral disclosure, use, exhibition or other means

"P" document published prior to the international filing date but later than the priority date claimed

"T" later document published after the international filing date or priority date and not in conflict with the application but cited to understand the principle or theory underlying the invention

"X" document of particular relevance; the claimed invention cannot be considered novel or cannot be considered to involve an inventive step when the document is taken alone

"Y" document of particular relevance; the claimed invention cannot be considered to involve an inventive step when the document is combined with one or more other such documents,such combination being obvious to a person skilled in the art

"&" document member of the same patent family

Date of the actual completion of the international search	Date of mailing of the international search report
22 FEBRUARY 2011 (22.02.2011)	**22 FEBRUARY 2011 (22.02.2011)**

Name and mailing address of the ISA/KR

Korean Intellectual Property Office
Government Complex-Daejeon, 139 Seonsa-ro, Seo-gu, Daejeon 302-701, Republic of Korea

Facsimile No. 82-42-472-7140

Authorized officer

KIM, Sung Hee

Telephone No. 82-42-481-5889

INTERNATIONAL SEARCH REPORT

International application No.
PCT/US2010/044222

Box No. II Observations where certain claims were found unsearchable (Continuation of item 2 of first sheet)

This international search report has not been established in respect of certain claims under Article 17(2)(a) for the following reasons:

1. ☐ Claims Nos.:
because they relate to subject matter not required to be searched by this Authority, namely:

2. ☐ Claims Nos.:
because they relate to parts of the international application that do not comply with the prescribed requirements to such an extent that no meaningful international search can be carried out, specifically:

3. ☐ Claims Nos.:
because they are dependent claims and are not drafted in accordance with the second and third sentences of Rule 6.4(a).

Box No. III Observations where unity of invention is lacking (Continuation of item 3 of first sheet)

This International Searching Authority found multiple inventions in this international application, as follows:

Ⅰ. Claims 1-7, 9 and 10 are directed to an electrical connector assembly or an electrical connector system comprising an insulative carrier and a plurality of termination devices.

Ⅱ. Claim 8 is directed to a tool suitable for use with an insulative carrier having a plurality of carrier walls.

Since the above-mentioned groups of claims do not share any of technical features identified, a technically special relationship between the inventions does not exist. Accordingly, the claims do not relate to one invention or to a single inventive concept.

1. ☐ As all required addtional search fees were timely paid by the applicant, this international search report covers all searchable claims.

2. ☒ As all searchable claims could be searched without effort justifying an additional fee, this Authority did not invite payment of any additional fee.

3. ☐ As only some of the required additional search fees were timely paid by the applicant, this international search report covers only those claims for which fees were paid, specifically claims Nos.:

4. ☐ No required additional search fees were timely paid by the applicant. Consequently, this international search report is restricted to the invention first mentioned in the claims; it is covered by claims Nos.:

Remark on Protest

☐ The additional search fees were accompanied by the applicant's protest and, where applicable, the payment of a protest fee.

☐ The additional search fees were accompanied by the applicant's protest but the applicable protest fee was not paid within the time limit specified in the invitation.

☐ No protest accompanied the payment of additional search fees.

INTERNATIONAL SEARCH REPORT

Information on patent family members

International application No.

PCT/US2010/044222

Patent document cited in search report	Publication date	Patent family member(s)	Publication date
US 2007-0197095 A1	23.08.2007	CN 101361235 A	04.02.2009
		CN 101361235 A	04.02.2009
		CN 101772864 A	07.07.2010
		CN 101772864 A	07.07.2010
		EP 1979992 A1	15.10.2008
		EP 1979992 A4	03.11.2010
		EP 2183825 A1	12.05.2010
		JP 04-348400 B2	24.07.2009
		JP 2009-152212 A	09.07.2009
		JP 2009-152212 A	09.07.2009
		JP 2009-522747 A	11.06.2009
		JP 2009-522747 T	11.06.2009
		JP 2010-535398 A	18.11.2010
		JP 4348400 B2	21.10.2009
		KR 10-1009131 B1	18.01.2011
		KR 10-2010-0053578 A	20.05.2010
		KR 10-2010-0093115 A	24.08.2010
		KR20080082006A	10.09.2008
		KR20080082006A	10.09.2008
		KR20100093115A	24.08.2010
		US 2007-197095 A1	23.08.2007
		US 2008-0020615 A1	24.01.2008
		US 2009-233480 A1	17.09.2009
		US 7553187 B2	30.06.2009
		US 7731528 B2	08.06.2010
		US 7762847 B2	27.07.2010
		WO 2007-089853 A1	09.08.2007
		WO 2007-089853 A1	09.08.2007
		WO 2009-017509 A1	05.02.2009
US 5795191 A1	18.08.1998	CN 1179448 C0	08.12.2004
		CN 1230298 A0	29.09.1999
		EP 1012925 A1	28.06.2000
		EP 1012925 B1	03.04.2002
		JP 03-889447 B2	07.03.2007
		JP 2002-513502 A	08.05.2002
		WO 98-11633 A1	19.03.1998
JP 09-007697 A	10.01.1997	None	
US 5066236 A1	19.11.1991	EP 0422785 A2	17.04.1991
		EP 0422785 A3	03.07.1991
		EP 0422785 B1	22.03.1995
		JP 02-537698 B2	08.07.1996
		JP 02-949449 B2	09.07.1999
		JP 04-028182 A	30.01.1992
		JP 2017-537698 B	25.09.1996
		JP 2949449 B2	13.09.1999
		JP 3233879 A	17.10.1991

INTERNATIONAL SEARCH REPORT

Information on patent family members

International application No.

PCT/US2010/044222

Patent document cited in search report	Publication date	Patent family member(s)	Publication date
		US 05104341A A	14.04.1992