(12) INTERNATIONAL APPLICATION PUBLISHED UNDER THE PATENT COOPERATION TREATY (PCT)

(19) World Intellectual Property Organization
International Bureau

(43) International Publication Date
11 October 2001 (11.10.2001)

PCT

(10) International Publication Number
WO 01/75928 A1

(51) International Patent Classification[7]: H01J 25/587, 23/48

(21) International Application Number: PCT/GB01/01473

(22) International Filing Date: 30 March 2001 (30.03.2001)

(25) Filing Language: English

(26) Publication Language: English

(30) Priority Data:
0007783.4 30 March 2000 (30.03.2000) GB

(71) Applicant *(for all designated States except US)*: **MARCONI APPLIED TECHNOLOGIES LIMITED** [GB/GB]; One Bruton Street, London W1J 6AQ (GB).

(72) Inventors; and

(75) Inventors/Applicants *(for US only)*: **SALEEM, Kesar** [GB/GB]; 31 St. Lukes Avenue, Ilford, Essex IG1 2JA (GB). **BRADY, Michael, Barry, Clive** [GB/GB]; 53 Plume Avenue, Maldon, Essex CM9 6LB (GB).

(74) Agent: **HUCKER, Nerys**; Marconi Intellectual Property, Waterhouse Lane, Chelmsford, Essex CM1 2QX (GB).

(81) Designated States *(national)*: AE, AG, AL, AM, AT, AU, AZ, BA, BB, BG, BR, BY, BZ, CA, CH, CN, CO, CR, CU, CZ, DE, DK, DM, DZ, EE, ES, FI, GB, GD, GE, GH, GM, HR, HU, ID, IL, IN, IS, JP, KE, KG, KP, KR, KZ, LC, LK, LR, LS, LT, LU, LV, MA, MD, MG, MK, MN, MW, MX, MZ, NO, NZ, PL, PT, RO, RU, SD, SE, SG, SI, SK, SL, TJ, TM, TR, TT, TZ, UA, UG, US, UZ, VN, YU, ZA, ZW.

(84) Designated States *(regional)*: ARIPO patent (GH, GM, KE, LS, MW, MZ, SD, SL, SZ, TZ, UG, ZW), Eurasian patent (AM, AZ, BY, KG, KZ, MD, RU, TJ, TM), European patent (AT, BE, CH, CY, DE, DK, ES, FI, FR, GB, GR, IE, IT, LU, MC, NL, PT, SE, TR), OAPI patent (BF, BJ, CF, CG, CI, CM, GA, GN, GW, ML, MR, NE, SN, TD, TG).

Published:
— *with international search report*
— *before the expiration of the time limit for amending the claims and to be republished in the event of receipt of amendments*

[Continued on next page]

(54) Title: MAGNETRONS

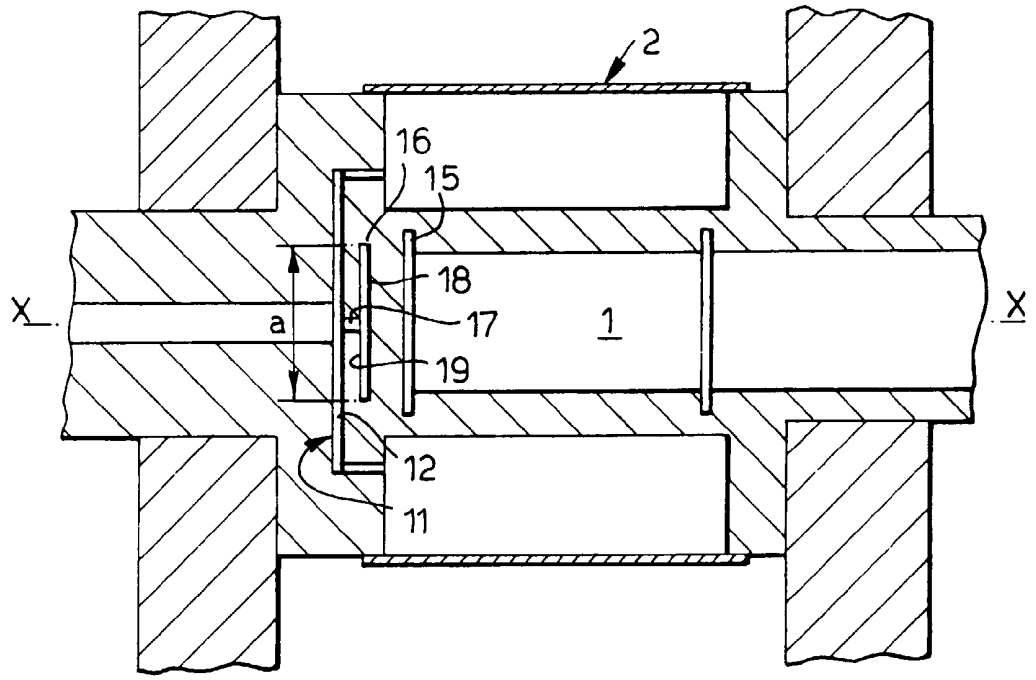

(57) Abstract: A magnetron includes a decoupling plate (16) located between the end hat (15) of the magnetron cathode (21) and an output coupling member (11). The use of the decoupling plate (16) presents a high impedance and gives a resonant circuit which is arranged to be resonant at the operating frequency of the magnetron. This prevents or reduces power loss due to capacitive coupling. In another arrangement, the decoupling plate (20) is mounted be a post (21) on the end hat (15) of the magnetron cathode (1).

WO 01/75928 A1

For two-letter codes and other abbreviations, refer to the "Guidance Notes on Codes and Abbreviations" appearing at the beginning of each regular issue of the PCT Gazette.

MAGNETRONS

This invention relates to magnetrons and more particularly to magnetrons in which output energy is coupled axially from the device.

A magnetron in which output energy is coupled along the longitudinal axis of the device is illustrated schematically in Figure 1. A cathode 1 is located on a longitudinal axis X-X and surrounded by an anode structure 2. The anode includes a cylindrical anode shell 3 from the interior of which a plurality of anode vanes, two of which 4 and 5 are shown, project to define resonant cavities between them. Magnetic pole pieces 6 and 7 located at the ends of the coaxial structure are arranged to produce an axial magnetic field in the region between the cathode 1 and the anode 2.

In this magnetron, energy is extracted from the magnetron via a coaxial output line 8 having an outer conductor 9 and an inner conductor 10. The inner conductor 10 is joined to a metallic output coupling member 11 which includes a disc part 12 and a plurality of conductive fingers 13, 14 around its periphery which connect with alternate anode vanes. During operation of the magnetron, energy is coupled via the output coupling member 11 to the output 8.

The inventors have realised that a problem may arise with the magnetron of the type illustrated in Figure 1, particularly where it is to be operated to give a high output energy. Capacitive coupling exists between the output coupling member 11 and the end 15 of the cathode 1 which faces it, this part of the cathode often being termed a "top hat". The capacitive coupling is illustrated as C_o in Figure 1. The problem is particularly acute

where a large number of anode cavities are included, for example, in magnetrons which are operated at X band. The existence of the capacitive coupling leads to a loss in output energy.

According to the invention, there is provided a magnetron comprising: a cathode coaxially surrounded by an anode; an axial output having an output coupling member connected to the anode; and a decoupling plate located between the end of the cathode and the said member.

By employing the invention, power loss due to capacitive coupling is reduced or prevented. The decoupling plate is a high impedance component which in one preferred embodiment of the invention comprises a disc mounted on a post, with the post being mounted on the output coupling member. The disc forms a slot with the facing surface of the output coupling member to present a high impedance in series with the already existing capacitance C_o. Advantageously, the dimensions of the decoupling plate are selected such that the equivalent circuit of the decoupling plate is an inductance and capacitance in parallel which gives a resonant circuit which is resonant at the operating frequency of the magnetron. This then prevents or reduces power loss due to capacitive coupling. Although it is preferred that the equivalent circuit of the decoupling plate acts as a resonant circuit which is resonant at the operating frequency of the magnetron, it may still prove of benefit where the resonant frequency is different to the operating frequency.

Another advantage of using the invention is that it enables the effects of the inherent capacitive coupling to be negated whilst still retaining the cathode end hat configuration,

thus protecting surrounding metal surfaces from stray electrons from the anode/cathode region of the magnetron.

The decoupling plate is preferably a disc, providing a large surface area parallel to the end hat of the cathode and also to the facing surface of the output coupling member. Other plate configurations could be used however. The decoupling plate may be of any suitable material, such as copper, for example.

As mentioned above, in a preferred embodiment the decoupling plate is supported by a post which is mounted on the output coupling member. In another arrangement, the post is supported by the cathode. This arrangement still provides a high impedance component in series with the existing inherent capacitance at the output of the magnetron but it is less convenient to implement.

Some ways in which the invention may be performed are now described by way of example with reference to the accompanying drawings, in which:

Figure 2 is a schematic longitudinal view of a magnetron in accordance with the invention;

Figure 3 is an explanatory diagram relating to the magnetron of Figure 2; and

Figure 4 schematically illustrates a longitudinal section another magnetron in accordance with the invention.

With reference to Figure 2, a magnetron is similar to that described with reference to Figure 1 and for convenience, the same reference numerals are used for the same components. A cathode 1 is surrounded by an anode 2 and a coaxial output line 9 is connected via an output coupling member 11 to extract energy from the interior of the magnetron.

In this magnetron, a copper decoupling plate 16 is located between the end hat 15 of the cathode and the disc 12 forming part of the output coupling member 11. The plate 16 is a circular planar member and is support at its centre by a post 17 which is mounted at the centre of the disc 12. A capacitance exists between the face 18 of the decoupling plate 16 which faces the end of the top hat 15, this capacitance C_0 being that which exists in the arrangement of Figure 1. In addition, there is a capacitance which exists between the other face 19 of the decoupling plate 16 which faces the output coupling member 12.

The decoupling plate 16 forms a slot with the output coupling member 12 which is a quarter wavelength long, shown as dimension a in Figure 2. The introduction of the decoupling plate 16 presents an effective inductance and capacitance in parallel which give a resonant circuit arranged to resonant at the operating frequency of the magnetron. The equivalent circuit is illustrated in Figure 3 where L_i and C_1 are the inductance and capacitance due to the decoupling plate 16 and the capacitance C_o is the pre-existing capacitance.

The capacitive coupling is zero when the dimensions and location of the decoupling plate 16 are chosen such that $f = \frac{1}{2\pi\sqrt{L_1 C_1}}$ where f is the operating frequency of the magnetron.

Figure 4 illustrates another embodiment in accordance with the invention. The magnetron is similar to that illustrated in Figure 2 but in this case, a decoupling plate 20 is supported by a post 21 which is mounted on the end hat 15 of the cathode 1. The equivalent circuit of this arrangement is the same as that illustrated in Figure 3.

CLAIMS

1. A magnetron comprising: a cathode coaxially surrounded by an anode; an axial output having an output coupling member connected to the anode; and a decoupling plate located between the end of the cathode and said member.

2. A magnetron as claimed in claim 1 wherein the plate has dimensions and is located such that the resonant frequency of its equivalent circuit is the operating frequency of the magnetron.

3. A magnetron as claimed in claim 1 or 2 wherein the decoupling plate is a planar disc.

4. A magnetron as claimed in claim 1, 2 or 3 wherein the decoupling plate is supported by a post.

5. A magnetron as claimed in claim 4 wherein the post is mounted on said member.

6. A magnetron as claimed in claim 4 wherein the post is mounted on the cathode.

7. A magnetron as claimed in any preceding claim wherein the plate is of copper.

8. A magnetron as claimed in any preceding claim and operative at X band.

9. A magnetron as claimed in any preceding claim wherein anode includes a plurality of anode vanes and the said member includes a disc and electrical connections to connect the disc with alternate anode vanes.

10. A magnetron substantially as illustrated in and described with reference to Figure 2,3 or 4 of the accompanying drawings.

Fig.1.

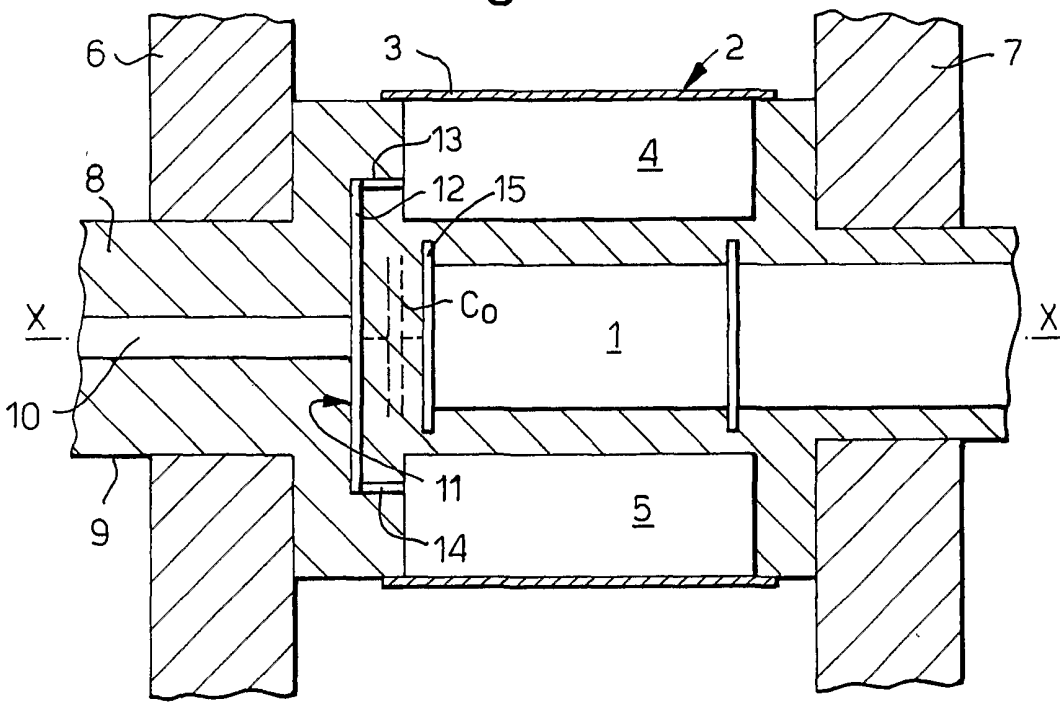

Fig.2.

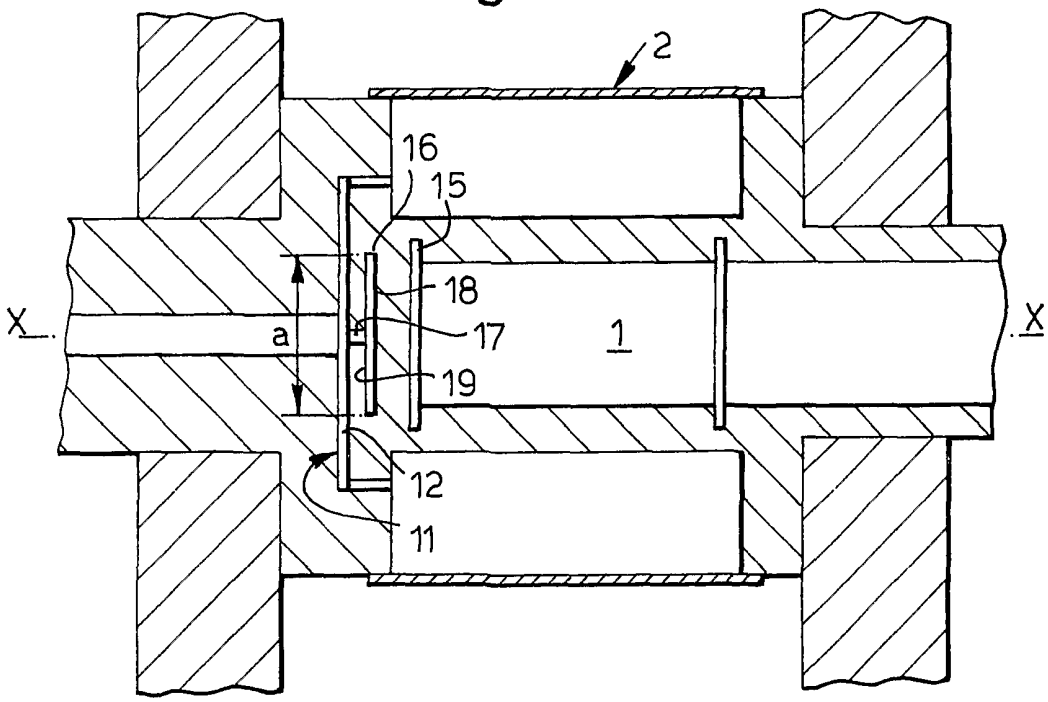

Fig.3.

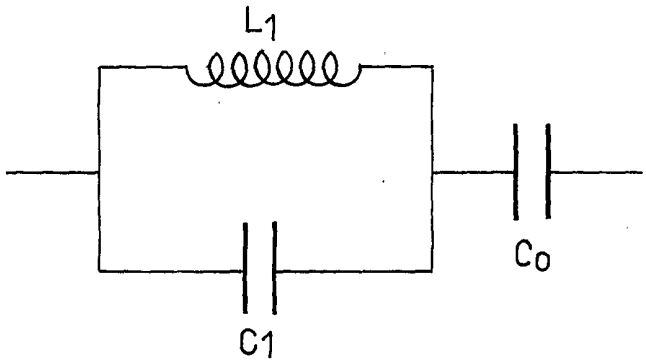

Fig.4.

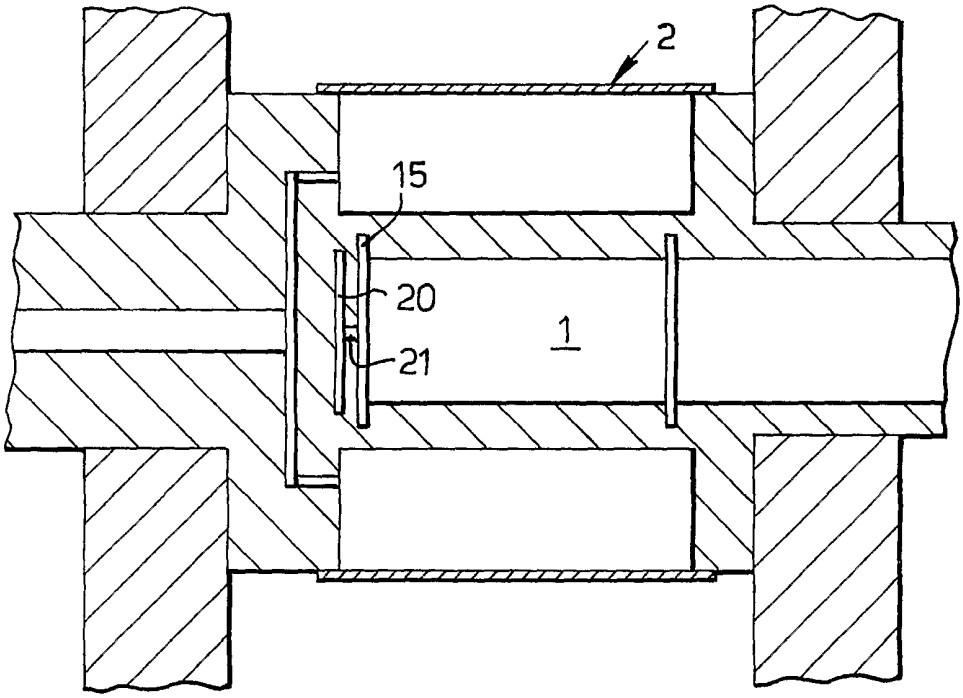

INTERNATIONAL SEARCH REPORT

ional Application No
PCT/GB 01/01473

A. CLASSIFICATION OF SUBJECT MATTER
IPC 7 H01J25/587 H01J23/48

According to International Patent Classification (IPC) or to both national classification and IPC

B. FIELDS SEARCHED

Minimum documentation searched (classification system followed by classification symbols)
IPC 7 H01J

Documentation searched other than minimum documentation to the extent that such documents are included in the fields searched

Electronic data base consulted during the international search (name of data base and, where practical, search terms used)

EPO-Internal, PAJ, WPI Data

C. DOCUMENTS CONSIDERED TO BE RELEVANT

Category °	Citation of document, with indication, where appropriate, of the relevant passages	Relevant to claim No.
X	US 3 315 121 A (STAATS) 18 April 1967 (1967-04-18)	1,3,9,10
A	column 4, line 65 -column 5, line 8 column 7, line 50 - line 65; figures 1,3 column 8, line 68 -column 9, line 13	7
A	US 3 458 753 A (STAATS JAMES E) 29 July 1969 (1969-07-29) column 27, line 42 - line 63 column 29, last paragraph; figure 18 column 30, line 54 -column 31, line 17	1-5,10

☐ Further documents are listed in the continuation of box C.

☒ Patent family members are listed in annex.

° Special categories of cited documents :

"A" document defining the general state of the art which is not considered to be of particular relevance

"E" earlier document but published on or after the international filing date

"L" document which may throw doubts on priority claim(s) or which is cited to establish the publication date of another citation or other special reason (as specified)

"O" document referring to an oral disclosure, use, exhibition or other means

"P" document published prior to the international filing date but later than the priority date claimed

"T" later document published after the international filing date or priority date and not in conflict with the application but cited to understand the principle or theory underlying the invention

"X" document of particular relevance; the claimed invention cannot be considered novel or cannot be considered to involve an inventive step when the document is taken alone

"Y" document of particular relevance; the claimed invention cannot be considered to involve an inventive step when the document is combined with one or more other such documents, such combination being obvious to a person skilled in the art.

"&" document member of the same patent family

Date of the actual completion of the international search	Date of mailing of the international search report
2 July 2001	06/08/2001

Name and mailing address of the ISA	Authorized officer
European Patent Office, P.B. 5818 Patentlaan 2 NL – 2280 HV Rijswijk Tel. (+31–70) 340–2040, Tx. 31 651 epo nl, Fax: (+31–70) 340–3016	Martín Vicente, M

1

Form PCT/ISA/210 (second sheet) (July 1992)

INTERNATIONAL SEARCH REPORT

Information on patent family members

ional Application No
PCT/GB 01/01473

Patent document cited in search report	Publication date	Patent family member(s)	Publication date
US 3315121 A	18-04-1967	DE 1294565 B	
		FR 1325192 A	26-07-1963
		GB 1009870 A	17-11-1965
		US 3377562 A	09-04-1968
US 3458753 A	29-07-1969	CH 455060 A	30-04-1968
		DE 1541009 A	17-07-1969
		GB 1158589 A	16-07-1969
		NL 6611477 A	01-03-1967
		SE 331721 B	11-01-1971