2 Sheets—Sheet 1.

C. O. & F. DAVIS.

DREDGING-MACHINES.

No. 194,334. Patented Aug. 21, 1877.

Fig. 1.

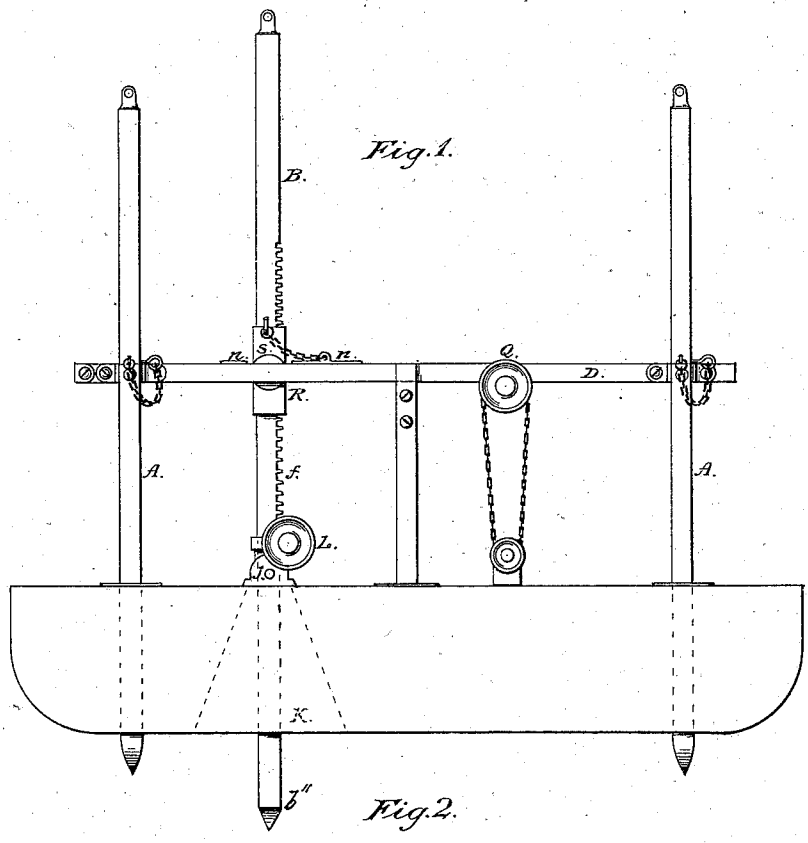

Fig. 2.

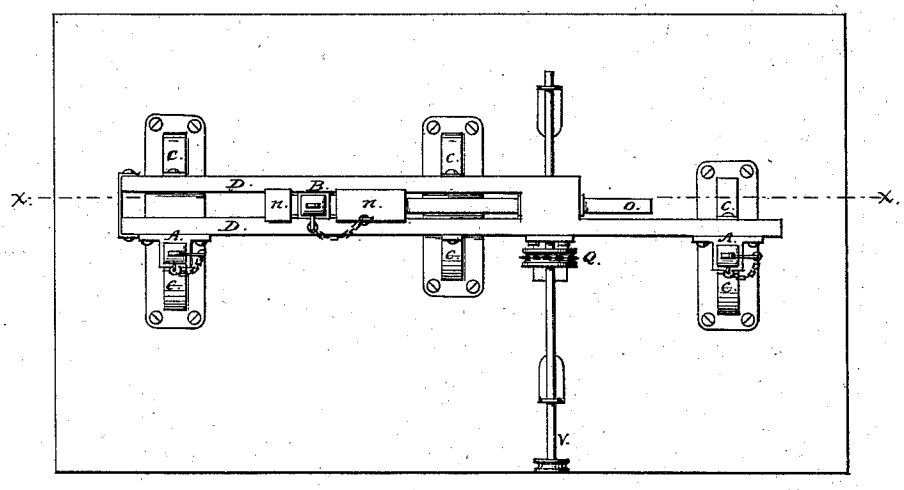

Witnesses,
Geo. Phil
John F. McEntyre

Inventors,
Charles O. Davis
Fred Davis

N. PETERS, PHOTO-LITHOGRAPHER, WASHINGTON, D. C.

2 Sheets—Sheet 2.

C. O. & F. DAVIS.

DREDGING-MACHINES.

No. 194,334. Patented Aug. 21, 1877.

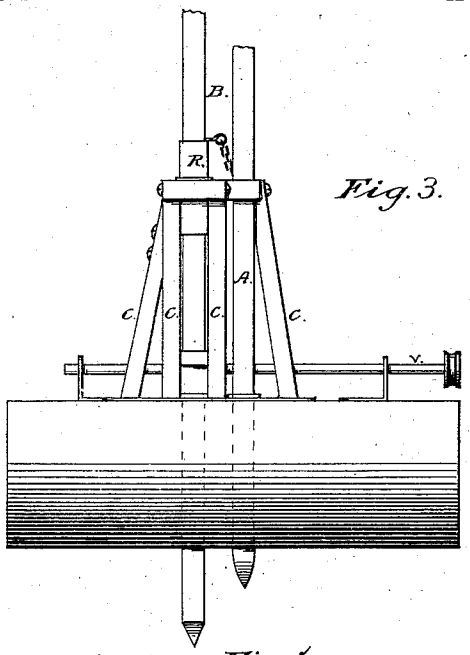

Fig. 3.

Fig. 4.

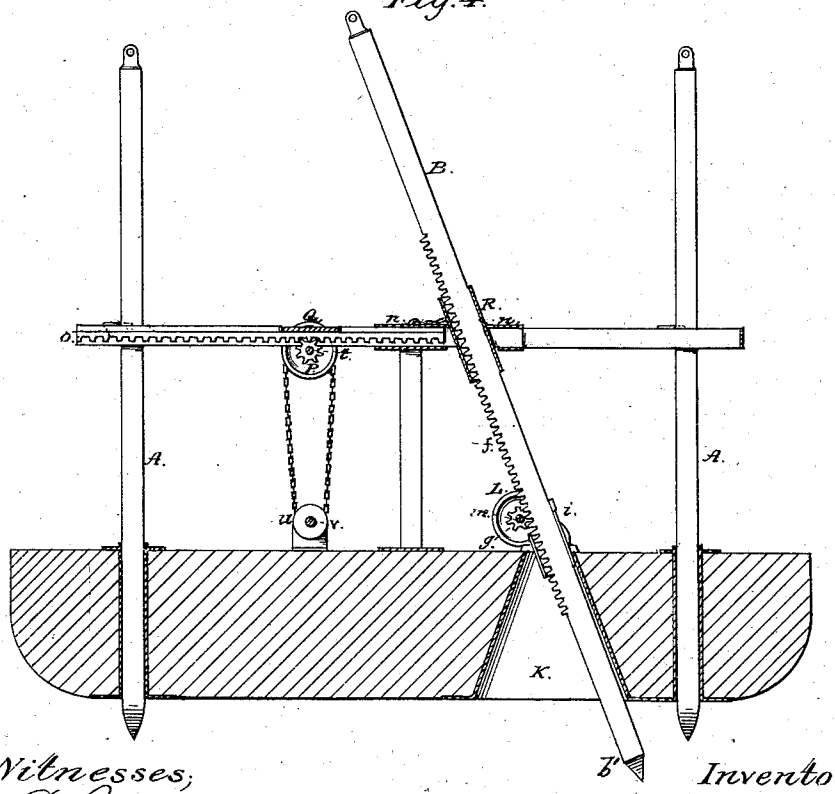

Witnesses;
Geo. E. Pirl
John F. McOutyre

Inventors;
Charles O. Davis
Fred Davis

N. PETERS, PHOTO-LITHOGRAPHER, WASHINGTON, D. C.

UNITED STATES PATENT OFFICE.

CHARLES O. DAVIS AND FRED DAVIS, OF PORTLAND, MAINE.

IMPROVEMENT IN DREDGING-MACHINES.

Specification forming part of Letters Patent No. **194,334**, dated August 21, 1877; application filed March 21, 1877.

To all whom it may concern:

Be it known that we, CHARLES O. DAVIS and FRED DAVIS, both of Portland, in the county of Cumberland and State of Maine, have invented certain new and useful Improvements in Dredging-Machines; and we do hereby declare that the following is a full, clear, and exact description thereof, that will enable others skilled in the art to which it appertains to make and use the same, reference being had to the accompanying drawings, forming a part of this specification, in which—

Figure 1 is a side elevation; Fig. 2, a plan, showing a horizontal section of the spuds; Fig. 3, an end view. Fig. 4 is a vertical longitudinal section through the line *x x* of Fig. 2.

Same letters show like parts.

Great inconvenience, loss of time, and expense in the use of dredging-machines have been occasioned by the difficulty experienced in shifting their positions when in operation. Usually dredges are held in position by means of spuds inserted in wells or tubes passing down through the hull, such as A A, Fig. I, and sometimes by means of lines or hawsers attached to fixed objects or to anchors. When a change of position becomes necessary and the spuds or anchors are raised, or the lines slacked, the dredge is liable to face off under the influence of wind, tide, or current, and the desired position is often only attained through a great expenditure of time and labor. In all cases lines must be depended upon to move the dredge. In narrow and much frequented channels their use is difficult, an impediment to navigation, and, in some localities, forbidden.

To obviate these difficulties and save the expense of the purchase and wear of lines is the purpose of my invention.

My improvement relates more especially to the class of dredges known as the "clam-shell dredge;" and consists of a movable spud admitting of both a vertical and a fore-and-aft motion, a triangular well, and devices for moving and raising the spud, as will be more fully understood from the following description:

The well K may be placed in any convenient position in the hull of the dredge, should be water-tight, and is of a triangular shape, (see Fig. 1,) the larger opening being at the bottom. Its width should be sufficient to admit the insertion and movement of the spud and sleeve *i*. Above this opening, their inner edges parallel with the sides of the well, are placed the horizontal guides D D, supported by the posts and braces *c c*.

The spud B should be a little longer than the holding-spuds A A, and upon one side be provided with the rack *f*. It is supported by means of the sleeve or guide *i* and accompanying mechanism. (See Fig. 4.) The sides of the sleeve *i* are provided with the pivots or trunnions J, which are inserted in bearings placed upon the deck by the sides of the opening of the well, and have ears or bearings for the shaft *m*, which has a pinion, *g*, matching through an opening in the sleeve into the rack *f*, and a wheel, L, for the application of power.

Between the guides D D is placed the slide *n n*, (see Figs. 1 and 2,) which is connected with a rack, *o*, as seen in Fig. 4. In an opening in the slide *n n* is the sleeve or guide R, surrounding the spud B, which is so connected with the slide *n n*, by means of the circles *s* in the sides of the slide *n n*, (see Fig. 1,) as to admit of a fore-and-aft motion. Attached to the under sides of the guides D D is a shaft, *t*, having a pinion, P, matching into the rack *o*, and a wheel, Q, connected by means of a band or chain with the wheel *u* on the shaft *v*.

We do not confine ourselves to the location of the spud B herein indicated, as its use upon the outside of the hull may in some cases be found advisable or convenient, nor to the peculiar mechanism for raising and moving the spud B.

While operating the dredge the spuds A A and B are dropped upon the bottom, as shown in Fig. 1. When it is desired to move the dredge ahead, the spud B is first raised from the bottom by power applied to the wheel L, and then, by rotation of the shaft *v*, is carried forward to the position *b'*, Fig. 4. The spuds A A are now raised, either by rack and pinion or by any other convenient device. By reversing the rotation of the shaft *v* the spud B is now carried backward, thus forcing the dredge ahead until the spud again reaches the position *b''*, Fig. 1, when the spuds are dropped and the dredging resumed.

In some cases it may be found better to place the well transversely in the hull and to give the spud B a transverse or beam motion.

What we claim as our invention, and desire to secure by Letters Patent of the United States, is—

1. The combination of the spud B and well K, as set forth.

2. The spud B, bearings J, sleeve *i*, in combination with the rack *f* and pinion *g*, as and for the purposes set forth.

3. The combination of the spud B, guides D D, sleeve R, slide *n n*, rack *o*, and pinion P, with shaft *t*, for the purposes set forth.

4. The combination of the spud B, guides D D, sleeve R, slide *n n*, as and for the purposes set forth.

5. The combination of the spud B and speeds A A, as and for the purposes set forth.

In testimony that we claim the foregoing we have hereunto set our hands this 13th day of March, 1877.

CHARLES O. DAVIS.
FRED DAVIS.

Witnesses:
GEO. E. BIRD,
JOHN F. MCINTYRE.