May 12, 1942. W. C. ATHON ET AL 2,282,692

CUTTING DEVICE

Filed July 10, 1940

Fig. 1.

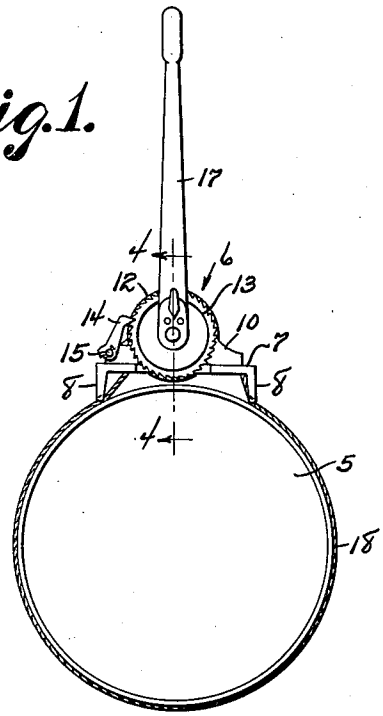

Fig. 2.

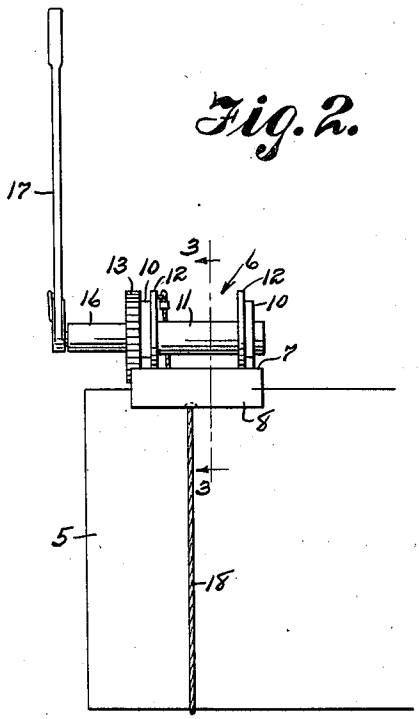

Fig. 3.

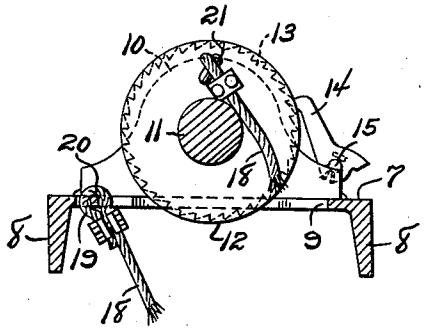

Fig. 4.

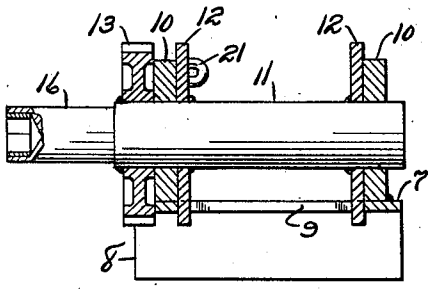

Walter C. Athon
Elijah E. Phillips
INVENTORS

BY Victor J. Evans & Co.
ATTORNEYS

Patented May 12, 1942

2,282,692

UNITED STATES PATENT OFFICE

2,282,692

CUTTING DEVICE

Walter C. Athon, Cody, and Elijah E. Phillips, Greybull, Wyo.

Application July 10, 1940, Serial No. 344,802

2 Claims. (Cl. 25—105)

The present invention relates to new and useful improvements in cutting devices particularly adapted for use in cutting bituminous materials, such as asphalt, tar or the like packaged in drum form.

The principal object of the invention is to provide a relatively simple and efficient device of this character which will quickly and easily cut such bituminous materials into relatively small sections for placement in a melting pot.

Another object of the invention is to provide a cutting device having the above characteristics that is portable so as to be carried from one drum of tar or the like to another, such drums being ordinarily spaced an appreciable distance apart when tarring a pipe line, roadway or other analogous uses.

The invention also consists in certain other features of construction and in the combination and arrangement of the several parts, to be hereinafter fully described, illustrated in the accompanying drawing and specifically pointed out in the appended claims.

In describing our invention in detail, reference will be had to the accompanying drawing wherein like characters denote like or corresponding parts throughout the several views, and in which:

Figure 1 is an end elevational view of a drum of bituminous material showing the device in use.

Figure 2 is a side elevational view thereof.

Figure 3 is a vertical sectional view taken substantially on line 3—3 of Figure 2.

Figure 4 is a vertical sectional view taken substantially on line 4—4 of Figure 1.

Referring to the drawing for a more detailed description thereof, there is disclosed a block 5 of bituminous material, such as asphalt, pitch or tar to be cut into sections by the cutting device generally designated by the reference numeral 6, said cutting device adapted to be disposed on the block 5 in the manner shown in Figures 1 and 2 of the drawing.

The cutting device 6 comprises a substantially rectangular-shaped base 7 having side flanges 8 which extend downwardly therefrom and which are arranged in planes located at opposite sides of and parallel to the plane in which the axis of the block is located. The downward extension of the flanges and their relation to the axis of the block, permit them to engage the tar being cut at opposite sides and thereby hold the device against accidental movement during the cutting operation.

An opening 9 is formed centrally of the base 7 and extending upwardly from opposed side walls thereof are a pair of standards 10. The standards 10 form a support for a drum 11, said drum being formed with the conventional retaining flanges 12 mounted adjacent the standards 10. One end of the drum 11 has a ratchet wheel 13 supported thereon adapted to be engaged by a pawl 14 pivotally mounted as indicated at 15 to one of the standards 10. A shaft 16 is frictionally held within the drum 11 and projects therefrom as best shown in Figures 2 and 4 of the drawing, one end of said shaft adapted to receive a conventional ratchet handle 17 for effecting rotation of the drum 11 in a clockwise or anti-clockwise direction.

A flexible cutting device in the form of a cable 18 has one end attached as indicated at 19 to a lug 20 formed on the base 7, the other end of said cable extending through the opening 9 and attached to a U-shaped bolt 21 extending from one of the flanges 12. The cable 18 is looped around the drum in the manner shown in Figures 1 and 2 of the drawing when using the device for cutting the drum in sections and by rotating the drum 11 in a clockwise direction, the cable 18 will be wound on the drum 11 as it cuts through the block of material 5.

The cutting device is used as follows: The block 5 is first cut approximately four inches by the use of an axe or the like, where the desired cut is to be made, after which the base is positioned on the block and the cable looped thereabout with a section of the cable placed in the cut. The handle 17 is then operated to rotate the drum 11 to pull the cable through the block of tar and wind said cable on the drum 11. The average size block of material will be cut into four equal sections which will be of the desired size for placement in a melting pot. The drum 11 is adapted to be rotated in an anti-clockwise direction for unreeling the cable to permit its use on subsequent blocks of material.

Also it will be understood, of course, by those skilled in the art that variations in the hereinabove described device involving the substitution of substantial equivalents for the devices described are intended to be comprehended within the spirit of the present invention and that the invention is capable of extended application and is not confined to the exact showing of the drawing nor to the precise construction described and, therefore, such changes and modifications may be made therein as do not affect the spirit of the invention nor exceed the scope thereof as expressed in the appended claims.

What is claimed is:

1. A cutting device of the character described comprising a channel shaped base member adapted to be positioned on a block of material to be cut in such manner that the downwardly directed flanges extend longitudinally of the block, a drum rotatably mounted on the base, ratchet mechanism disposed to prevent rotation of the said drum in one direction, a flexible cutting element having one end attached to the base and the opposite end fastened to the drum and adapted to encircle the material, one end of the said drum having a non-circular socket therein, and a ratchet arm detachably engageable with the socket end of the drum for turning the drum to tighten the flexible element and cut through the block of material.

2. In a cutting device of the character described, a channel shaped base member, a pair of bearing members secured to and disposed vertically of the base adjacent the opposed ends thereof, a cylindrical drum extending through and journalled on the said bearing members, the said drum having one end projecting laterally of the base and having a non-circular socket therein, a pair of flanges secured to the drum and disposed adjacent the bearing elements, a ratchet wheel fixed on the drum exteriorly of the bearing elements, a pivoted pawl mounted on the base member operable to engage the ratchet wheel to prevent rotation of the drum in one direction, a flexible cutting cable having one end fastened to the base and the opposite end attached to the drum adapted to be looped about the block of material for cutting the same, and a ratchet handle adapted for detachable connection with the socketed end of the drum for rotating the drum on the base.

WALTER C. ATHON.
ELIJAH E. PHILLIPS.