(No Model.) 2 Sheets—Sheet 1.

J. BURNHAM.

WINDMILL.

No. 456,549. Patented July 28, 1891.

Fig. 1.

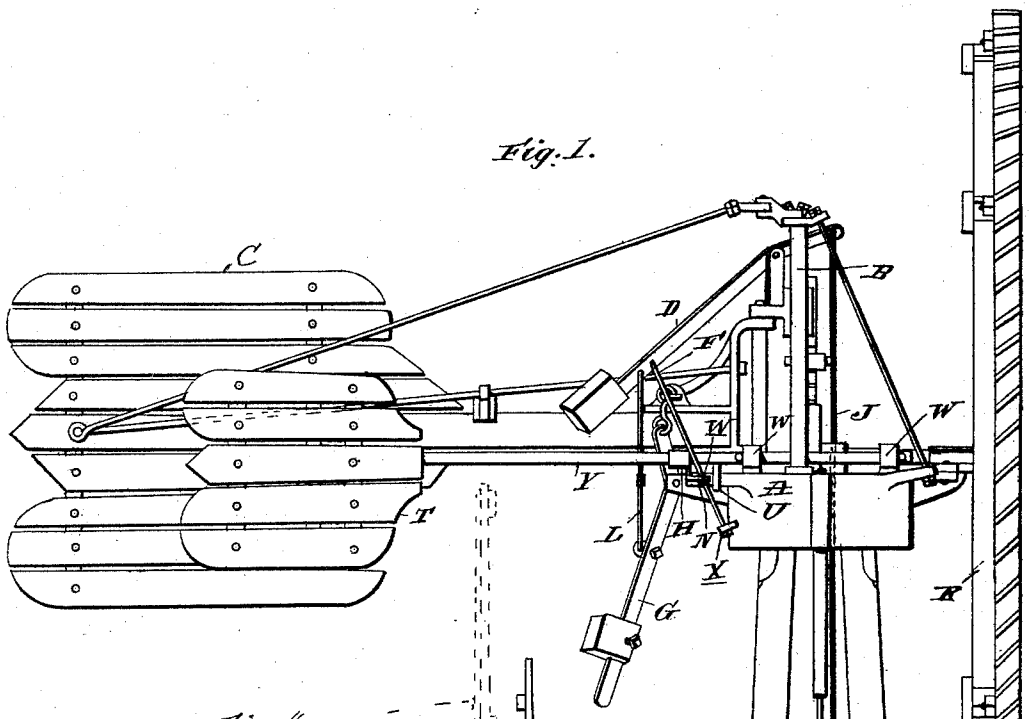

Fig. 4.

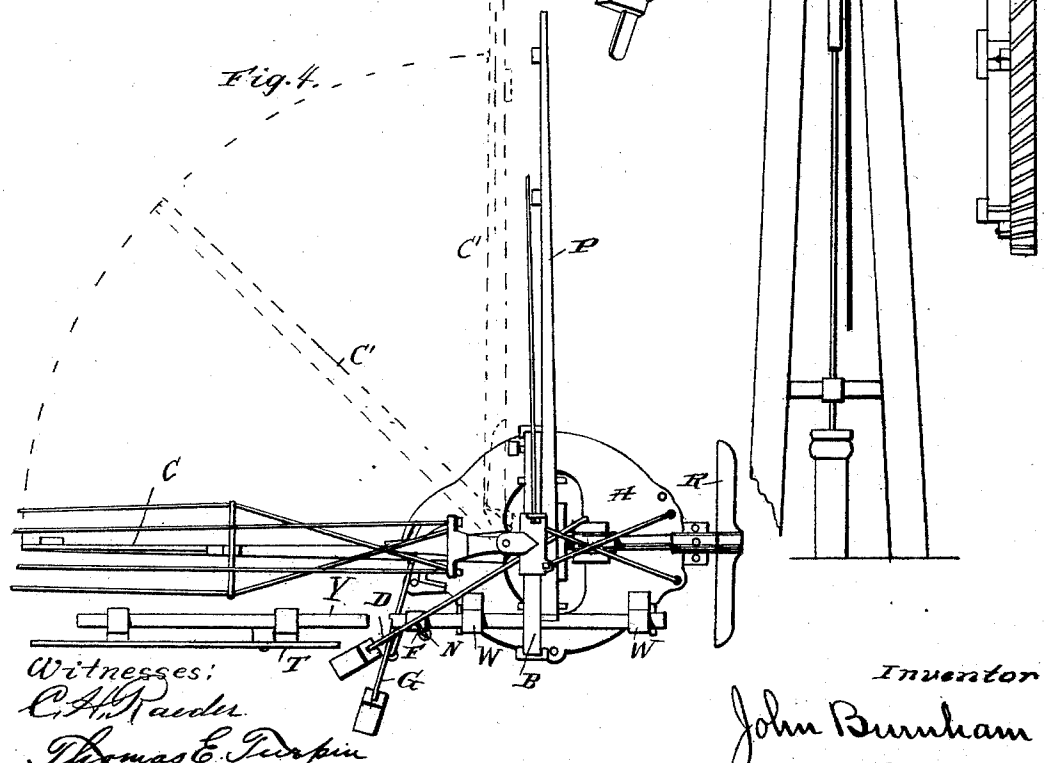

Witnesses:
C. A. Snider
Thomas E. Turpin

Inventor
John Burnham
James Shelby
Attorney

By

THE NORRIS PETERS CO., PHOTO-LITHO., WASHINGTON, D. C.

(No Model.) 2 Sheets—Sheet 2.

J. BURNHAM.

WINDMILL.

No. 456,549. Patented July 28, 1891.

Fig. 2.

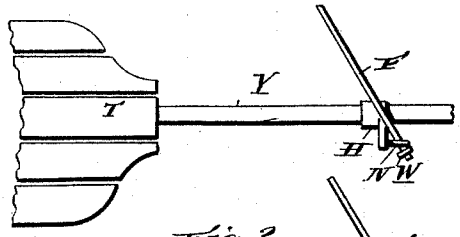

Fig. 3.

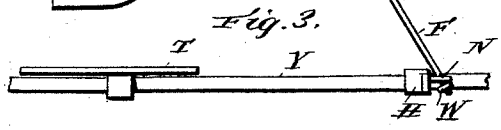

Fig. 5.

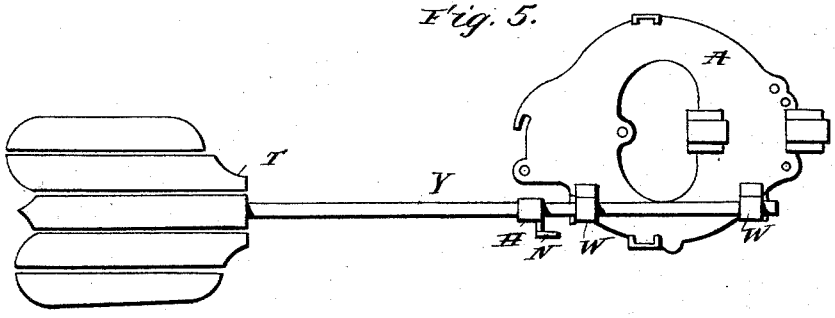

Witnesses:

C. H. Raeder

Thomas E. Turpin

Inventor

John Burnham

By James J. Sheehy

Attorney

THE NORRIS PETERS CO., PHOTO-LITHO., WASHINGTON, D. C.

UNITED STATES PATENT OFFICE.

JOHN BURNHAM, OF BATAVIA, ILLINOIS.

WINDMILL.

SPECIFICATION forming part of Letters Patent No. 456,549, dated July 28, 1891.

Application filed December 11, 1890. Serial No. 374,282. (No model.)

To all whom it may concern:

Be it known that I, JOHN BURNHAM, a citizen of the United States, residing at Batavia, in the county of Kane and State of Illinois, have invented certain new and useful Improvements in Windmills; and I do declare the following to be a full, clear, and exact description of the invention, such as will enable others skilled in the art to which it appertains to make and use the same.

My invention has relation to improvements in regulating windmills, and the novelty will be fully understood from the following description and claims when taken in connection with the accompanying drawings, in which—

Figure 1 is an elevation of a solid-wheel windmill in which my invention is embodied. Fig. 2 is a broken enlarged elevation of my regulating-vane with the tail portion in an upright position. Fig. 3 is a view of the main portion of the vane as when the mill is furled. Fig. 4 is a plan or top view of Fig. 1. Fig. 5 is a plan view of the turn-table and my regulating-vane in a position thereon as when furled.

The purpose of this invention is automatically to regulate the speed of what is known as "solid-wheel" windmills by the same power which rotates the wheel. In these mills a side vane is employed so as to deflect the wheels to present less surface to the wind, and thereby in a measure prevent an accelerated velocity in increasing winds, and weights and levers are now employed to prevent the wheel from presenting too little surface to the wind. These levers and weights are found to serve only to a certain extent the purpose designed—that is, there has not been such joint action between the side vane and the regulating weights and levers as to cause the wheel to receive a uniform pressure of wind when it moves with changeable velocities. Further than this, there is considerable jarring of the parts by their sudden contact, which is injurious to the working parts of the mill. I remedy these difficulties and attain a substantially uniform velocity to the wheel by means of a vane journaled to the turn-table some little distance from the tail-vane and substantially parallel with the shaft of the wind-wheel. This vane is made to project out far enough from the turn-table, according to the size of the wheel, to catch the wind on the opposite side of the wheel from the side vane when the wheel has been, at a particular time, sufficiently deflected to reduce its velocity and hold the wheel in that position for the wind to act on the surface required.

The action of my vane is especially necessary because the wheels to these mills are hung considerably eccentric, so that when they commence to go out of the wind they continue so to do with an accelerated velocity, whereby when the tail-vane and side vane meet a considerable shock is produced, and when the wheel is edgewise to the wind the leverage by the eccentricity mentioned is such that the weights usually employed to put the wheel into the wind are very slow in so doing. Hence the wheel in furious gales has a very irregular velocity.

Referring by letter to the said drawings, A represents the turn-table, B the truss, R the wind-wheel, P the side vane, and C is the tail-vane, of an ordinary solid-wheel windmill.

D G are the weighted levers which have been mentioned as employed to put the wheel to the wind, and J is the rod employed to furl the mill. The connection is made with the levers D G by means of the rod L, whereby when the mill is furled both levers D and G are elevated, the lever D being employed to operate my regulating-vane, as subsequently set forth.

Y represents the spar, and T the tail, of my regulating-vane. The spar is journaled to the turn-table A by means of bearings W W, which permit it to have an axial movement. The tail T is made so much wider below than above the spar that the tail may be kept vertical by means of the excess of wind-pressure on said lower part and a stop-pin U put into spar Y to bear against the turn-table A, as shown in Fig. 1. On the spar is fixed an angular arm H N, and through the part N is formed a slot to permit a rod F freely to work therein. This rod is attached to the lever D, and on it are two adjustable collars *w* and *x*, which are placed such a distance apart as to permit the wind-wheel to have any desired position with reference to the direction of the wind without turning the spar Y in its

bearings. The arm H N, when the tail T is vertical, has a downward pitch of about forty-five degrees, and when the tail is furled it has an upward pitch of about forty-five degrees, whereby the tail is turned one-fourth of a circle. The collar *x* elevates the arm H N to furl the vane Y T, and the collar *w* insures to the tail a vertical position.

In operation, suppose the wind to increase to a moderate gale, the tail C would be turned with reference to side vane P, as indicated by dotted lines C′, Fig. 4, and while the direction of the wind has not changed, the position of the mill has been changed so that the wind strikes it in the direction indicated by darts *b*, and the vane Y T is brought into the wind and is in position to bring the wind-wheel face to the wind when the gale subsides.

From the foregoing it will be seen that the farther the wheel R is put edgewise to the wind the farther the vane Y T is put into the wind, and that thereby there is an equipoise attained between the propelling-power and that power acting on the regulating device.

It is proper to state that I have in operation a mill constructed on the plan herein set forth, and its operation is such as to warrant the within allegations.

Having described my invention, what I claim is—

1. The combination, with the turn-table A, of the side vane P, wheel R, and the tail-vane C, and the regulating-vane Y T, journaled on the turn-table substantially parallel with the tail-vane and on the side opposite to the vane P, as specified.

2. The auxiliary vane provided with the angular slotted arm H N, in combination with the main vane C, the lever D, connected thereto, the rod F, provided with the adjustable collars *w x* and connected to lever D, wheel R, vanes P and C, and turn-table A, substantially as specified.

In testimony whereof I affix my signature in presence of two witnesses.

JOHN BURNHAM.

Witnesses:
F. H. BURKE,
C. H. BROWN.