Office de la Propriété Intellectuelle du Canada
Un organisme d'Industrie Canada

Canadian Intellectual Property Office
An agency of Industry Canada

CA 2976856 A1 2016/08/25

(21) 2 976 856

(12) DEMANDE DE BREVET CANADIEN
CANADIAN PATENT APPLICATION

(13) A1

(86) Date de dépôt PCT/PCT Filing Date: 2016/02/15
(87) Date publication PCT/PCT Publication Date: 2016/08/25
(85) Entrée phase nationale/National Entry: 2017/08/16
(86) N° demande PCT/PCT Application No.: GB 2016/050358
(87) N° publication PCT/PCT Publication No.: 2016/132104
(30) Priorités/Priorities: 2015/02/19 (GB1502822.8);
2015/03/26 (GB1505095.8)

(51) Cl.Int./Int.Cl. *A61M 35/00* (2006.01),
B05B 1/20 (2006.01), *B05B 1/32* (2006.01),
B05B 12/12 (2006.01), *B05B 9/04* (2006.01),
B05B 9/043 (2006.01), *B65D 83/28* (2006.01)

(71) Demandeur/Applicant:
AAN MEDICAL LIMITED, GB

(72) Inventeurs/Inventors:
COATES, ANDREW, GB;
DAVIS, NIGEL, GB;
TULLOCH, ANDREW, GB

(74) Agent: BORDEN LADNER GERVAIS LLP

(54) Titre : DISTRIBUTEUR
(54) Title: DISPENSER

Fig. 5

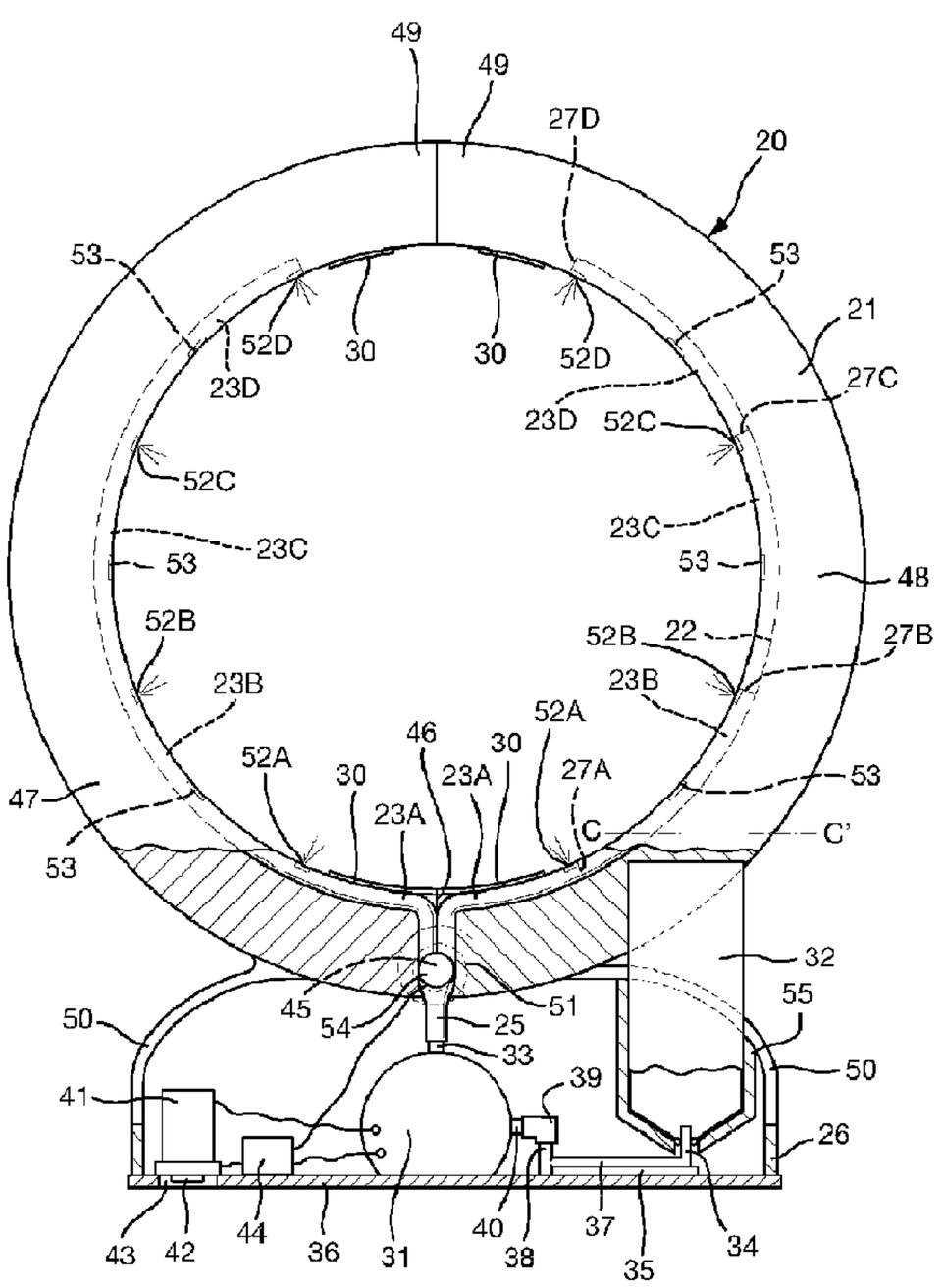

(57) Abrégé/Abstract:
A dispenser for spraying fluid onto a human or animal body part comprises a hoop, C-shaped or U-shaped structure, a plurality of apertures from which a fluid is sprayed onto a body part place within the structure. The fluid connection between the container for

CA 2976856 A1 2016/08/25

(21) 2 976 856

(13) A1

(57) Abrégé(suite)/Abstract(continued):
the fluid and the apertures ensures that the flow rate of the fluid from one aperture is substantially the same as that from another aperture.

(12) INTERNATIONAL APPLICATION PUBLISHED UNDER THE PATENT COOPERATION TREATY (PCT)

(19) World Intellectual Property Organization
International Bureau

(43) International Publication Date
25 August 2016 (25.08.2016)

WIPO | PCT

(10) International Publication Number
WO 2016/132104 A1

(51) International Patent Classification:
A61M 35/00 (2006.01) *B05B 9/04* (2006.01)
B05B 1/20 (2006.01) *B65D 83/28* (2006.01)
B05B 1/32 (2006.01) *B05B 12/12* (2006.01)
B05B 9/043 (2006.01)

(21) International Application Number:
PCT/GB2016/050358

(22) International Filing Date:
15 February 2016 (15.02.2016)

(25) Filing Language: English

(26) Publication Language: English

(30) Priority Data:
1502822.8 19 February 2015 (19.02.2015) GB
1505095.8 26 March 2015 (26.03.2015) GB

(71) Applicant: **AAN MEDICAL LIMITED** [GB/GB]; Sandgate, Netton Street, Bishopstone, Salisbury Wiltshire SP5 4DF (GB).

(72) Inventors: **COATES, Andrew**; AAN Medical limited, Sandgate, Netton Street, Bishopstone, Salisbury, Salisbury Wiltshire SP4 5DF (GB). **DAVIS, Nigel**; Sivaden Limited, Bio Park, Broadwater Road, Welwyn Garden City Hertfordshire AL7 3AX (GB). **TULLOCH, Andrew**; 20 Chamberlain Gardens, Arborfield Cross, Reading Berkshire RG2 9QA (GB).

(74) Agent: **BECKHAM, Robert**; Gatehouse, Lake Road, Portishead, Bristol BS20 7JA (GB).

(81) Designated States *(unless otherwise indicated, for every kind of national protection available)*: AE, AG, AL, AM, AO, AT, AU, AZ, BA, BB, BG, BH, BN, BR, BW, BY, BZ, CA, CH, CL, CN, CO, CR, CU, CZ, DE, DK, DM, DO, DZ, EC, EE, EG, ES, FI, GB, GD, GE, GH, GM, GT, HN, HR, HU, ID, IL, IN, IR, IS, JP, KE, KG, KN, KP, KR, KZ, LA, LC, LK, LR, LS, LU, LY, MA, MD, ME, MG, MK, MN, MW, MX, MY, MZ, NA, NG, NI, NO, NZ, OM, PA, PE, PG, PH, PL, PT, QA, RO, RS, RU, RW, SA, SC, SD, SE, SG, SK, SL, SM, ST, SV, SY, TH, TJ, TM, TN, TR, TT, TZ, UA, UG, US, UZ, VC, VN, ZA, ZM, ZW.

[Continued on next page]

(54) Title: DISPENSER

(57) Abstract: A dispenser for spraying fluid onto a human or animal body part comprises a hoop, C-shaped or U-shaped structure, a plurality of apertures from which a fluid is sprayed onto a body part place within the structure. The fluid connection between the container for the fluid and the apertures ensures that the flow rate of the fluid from one aperture is substantially the same as that from another aperture.

Fig. 5

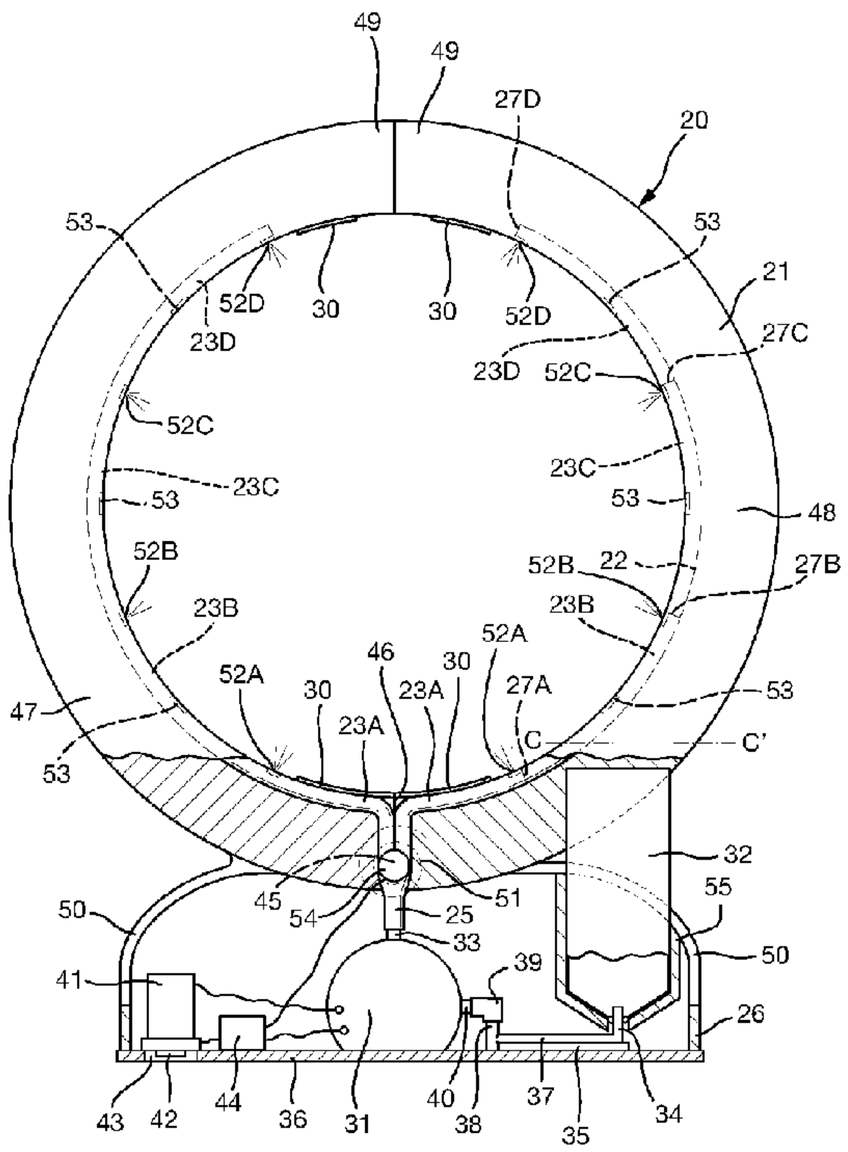

WO 2016/132104 A1

WO 2016/132104 A1

(84) Designated States *(unless otherwise indicated, for every kind of regional protection available)*: ARIPO (BW, GH, GM, KE, LR, LS, MW, MZ, NA, RW, SD, SL, ST, SZ, TZ, UG, ZM, ZW), Eurasian (AM, AZ, BY, KG, KZ, RU, TJ, TM), European (AL, AT, BE, BG, CH, CY, CZ, DE, DK, EE, ES, FI, FR, GB, GR, HR, HU, IE, IS, IT, LT, LU, LV, MC, MK, MT, NL, NO, PL, PT, RO, RS, SE, SI, SK, SM, TR), OAPI (BF, BJ, CF, CG, CI, CM, GA, GN, GQ, GW, KM, ML, MR, NE, SN, TD, TG).

Published:

— *with international search report (Art. 21(3))*

— *with amended claims (Art. 19(1))*

Description

Title of Invention: DISPENSER

Technical Field

[0001] This invention relates to dispensers for delivering fluids especially pharmaceuticals and other medical treatments in liquid, solution or suspension form, as well as perfumes and other skin products, to the bodies of people and animals.

Background Art

[0002] Despite improvements in drug delivery systems, there remains an issue in the delivery of fluids especially pharmaceuticals and other medical treatments in liquid, solution or suspension form, as well as perfumes and other skin products, to the bodies of people and animals. Provision of drugs and other medical treatments has been usually by injection, pills, and nasal sprays; more recently transdermal patches have been used to deliver a measured amount of the drug or other treatment concerned. In this specification "treatment" includes pre-treatments of persons to minimise their risk of reaction if subsequently exposed, for example, to hazardous gases.

[0003] There remains an issue in ensuring the accuracy of delivery of the drug or other treatment concerned in some circumstances, or in the case of transdermal treatments with patches to ensure the patch continues to adhere sufficiently to enable the drug or other treatment to cross the skin barrier for a long enough time for the treatment to be effective.

[0004] A small number of drugs are available in spray-on formulations, but these require significant dexterity to apply and give very inconsistent doses due to variation in the accuracy of the user, the distance of the spray from the target and the number of times and force with which the plunger was pressed.

Summary of invention

[0005] According to the present invention a dispenser for spraying a fluid onto a body part comprises apertures in a hoop, C- or U- structure from which apertures the fluid may be sprayed onto a body part placed in the dispenser, and in which the apertures are connected to a source of fluid to be dispensed under pressure through a manifold, and having one or a plurality of tubes connecting the manifold to the apertures and in which the flow rate of the fluid from one aperture is substantially the same as that from another aperture located further away from the source of fluid under pressure.

[0006] In one embodiment, the dispenser further comprises a pump, a container, and a fluid connection between the container and the pump connecting the container to the pump, the pump connected to one or a plurality of tubes connected to the apertures in which

the flow rate of the fluid from one aperture is substantially the same as that from another aperture located further away from the pump.

[0007] In another embodiment a dispenser for spraying a fluid onto a body part comprising a pair of concentric semi-circular arms, the arms being pivoted together at the proximal ends of each arm, apertures from which a fluid may be sprayed onto a body part within the hoop, a fluid connection to connect a container containing the fluid to the inlet of a pump; the pump connected to one or a plurality of tubes in turn connecting to the apertures, and in which the flow rate of the fluid is substantially the same from one aperture as from another aperture located further away from the pump.

[0008] In one arrangement the pump is connected to the tube(s) through am manifold.

[0009] The inner surface of the hoop or surfaces of the arms, in one arrangement, has sensors connected to a programmable chip which open and closes access to one or more of the tubes from the manifold to the apertures, in response to the presence and orientation of a body part inserted in the dispenser.

[0010] In a further embodiment the dispenser is coupled directly to a container containing fluid to be dispensed under pressure.

[0011] Other possible features of the invention will be apparent in the attached exemplary description and/or as set out in the claims attached.

Brief description of drawings

[0012] In order that the invention may be more fully understood, examples of the invention are illustrated in the accompanying drawings in which:

[0013] Figures 1 and 2 show perspective views of one example of a dispenser according to the invention;

[0014] Figure 3 is a section on the line A-A' of figure 1;

[0015] Figure 4 is a schematic view of the dispenser of figures 1 and 2 partially sectioned on the line B-B' of figure 1A;

[0016] Figure 5 is similar to figure 4 but illustrates a further development of the dispenser shown in figures 1 to 4;

[0017] Figure 6 is a section on the line C-C' of figure 5; and

[0018] Figure 7 shows a dispenser similar to that of figure 5 but with treatment supplied directly from a pressurised container.

Description of the examples

[0019] In figures 1 to 4, a dispenser 20 according to the invention for spraying a fluid onto a body part comprises a hoop 21 and apertures 28 from which the fluid may be sprayed onto a body part within the hoop. A fluid connection 37 connects a container 32 mounted in receiver 55 and containing the fluid through an upstanding nipple 34 to the inlet 40 of a pump 31. The pump 31 has an outlet 33 which is connected a manifold 25.

A pair of tubes 23 extends around internal groves 22 in the hoop 21.and have apertures 28 directed into the middle of the hoop 21. The apertures 28A, 28B, 28C, 28D increase in size as distance from the pump 31 increases so that the flow rate of the fluid from each aperture is substantially the same.

[0020] For medical purposes, the tubes 23 comprise silicon rubber or like material suitable for medical use. Separate tubes 23 extended around the inside of the left hand side of the hoop 21 and the right hand side of the hoop 21 as seen in figure 1. The manifold 25 is mounted in a hollow base 26; the other ends 27 of the tubes are closed. The apertures 28A, 28B, 28C 28D are in the form of self-sealing slits increasing in size as one travels away from the pump 31 and manifold 25. The hoop 21 is mounted on the base 26. . The tubes 23 are held in place at the top and bottom of the hoop 21 by plates 30.

[0021] A container 32 containing a fluid of interest is inserted through the top of the base 26 into a container receiver 55, with its outlet nozzle connected to the upstanding nipple 34 on a container mounting 35. The bottom of the base 26 is closed by a base plate 36. The container mounting 35 is mounted on the base plate 36. A fluid connection 37 is provided in the container base to a pump connector 38 also upstanding from the container mounting 35. A short length of tube 39 of silicon rubber or other suitable material connects the pump connector 38 to the pump inlet 40.

[0022] Container 32 is replaceable and may be subdivided to provide two or more different treatments.

[0023] The pump 31 is powered from a battery or mains source 41. In most cases the pump 31 would be triggered by a sensor (for example a sensor 53 as discussed with reference to figures 5 and 6 below), although a switch 42 operated through an aperture 43 in the base plate can be used to turn the dispenser on and off. However, the switch in some arrangements may more conveniently be placed on the side of the base or isolated from user intervention altogether within the case. Optionally the aperture 43 may house a flexible rubber cover which allows the switch or other activation device 42 to be operated but which keeps dirt and moisture away from the inside of the base. If the switch is not intended for user operation and is inside the case, the aperture 43 would be omitted altogether. A programmable chip 44 can be set to limit the length of time during which the pump s switched on and/or to prevent operation of the pump 31 for a pre-set period following its previous operation. The programmable chip may also be programmed to vary the pump pressure (and thus the density and spread of any spray ejected through the apertures 28A, 28B, 28C, 28D).

[0024] In operation, a patient places a part of the body, say, an arm, wrist, hand, leg, ankle, foot etc., within the hoop 21. When the pump is activated by turning on the switch or operation of some other suitable activation device 42, a treatment contained in container 32 is pumped by pump 31 into each of the tubes 23 around the hoop 21. The

pump pressure in the tubes 23 forces the fluid through the self-sealing slits 28 as a spray 26 onto the patient's body part being treated.

[0025] Although developed for spraying fluids onto human body parts, there is no reason in principle why the apparatus should not be used to spray fluids onto parts of animals in a similar way as part of a veterinary treatment.

[0026] In the device of figures 1 to 4, the size of the part to be treated is limited by the diameter of the hoop 21.

[0027] The device in figures 5 and 6 overcomes this restriction. In figures 5 and 6, the dispenser 20 comprises two semi-circular arms 47 and 48 pivoted at pivot 45 together at their lower proximal ends, and in the closed position butting against one another at their distal ends 49. The pivot 45 is mounted in a base 26 which has a slot 50 to enable the arms 47 and 48 to open and close. Optionally there is a spring 51 associated with the pivot 45, urging the arms to close together at the distal ends 49. As shown in figures 5 and 6, when closed together the two semi-circulars arms 47 and 48 forms a hoop 21, however the two arms 47 and 48 could take up the form as a C or U shape rather than a hoop.

[0028] A fluid connection 37 connects to a container containing a fluid to be sprayed to the inlet of a pump 31. The pump 31 has an outlet 33 to which is connected a manifold 25. A plurality of tubes, 23A, 23B, 23C, 23D connect the manifold 25 to the apertures 52A, 52B, 52C 52D distributed around the inside of the arms 47 and 48. The tubes 23A, 23B 23C and 23D are mounted in grooves 22 in the inner surfaces of the arms 47 and 48. Each individual tube 23A, 23B, 23C 23D connects an individual aperture 52A, 52B 52C and 52D to the manifold 25. In this arrangement, because the fluid pressure at each nozzle is substantially the same, the flow rate of the fluid from one aperture is substantially the same as that from another aperture. The ends 27A, 27B, 27C, 27D of the tubes 23 terminate with nozzles 52A, 52B, 52C, 52D which form the apertures. Self-sealing slits could replace the nozzles in this and other examples.

[0029] In the arrangement of figures 5 and 6, the arms 47 and 48 are opened and a body part inserted between their distal ends 49. The body part can be substantially larger, such a thigh, chest or shoulder than could be inserted in hoop 21 of figures 1 to 4. When the dispenser is ready to operate a container 32 containing a fluid of interest is inserted though the top of the base 26, into a container receiver 55, with its outlet nozzle connected to the upstanding nipple 34 on a container mounting 35. The bottom of the base 26 is closed by a base plate 36. The container mounting 35 is mounted on the base plate 36. Fluid connection 37 is provided in the container base to pipe fluid a pump connector 38, also upstanding from the container mounting 35. A short length of tube 39 of silicon rubber or other suitable material connects the pump connector 38 to the pump inlet 40. The pump 31 has an outlet 33 to which is connected the manifold 25.

Tubes 23A, 23B, 23C, 23D connect the manifold 25 individually to a nozzle 52A, 52B, 52C, 52D.

[0030] In the example of figures 5 and 6, operation of the pump is controlled by a programmable chip 44 connected to a battery and a sensor 53 to detect when a body part has been inserted. The chip may be programmed to operate only at particular times of day, and/or after a particular time interval has elapsed from a previous treatment to prevent an overdose, and/or when a container with a particular bar code, which is read by a bar-code reader is mounted on nipple 34. However, in more sophisticated models, a series of sensors 53 is distributed around the inner surfaces of the arms 47 and 48 (sensors of this kind can also be distributed around the inside of hoop 21 in figures 1 to 4). The sensors can detect the presence of a body part and in conjunction with the programmable chip 44, operate the pump only when the correct body part is present, within the area bounded by arms 47 and 48 and hoop 21. In the configuration of figures 5 and 6, however, the sensors in combination with the programmable chip can identify the orientation of the body part. The chip 44 is connected in this configuration to motorised valves 54 controlling entry to tubes 23A, 23B 23C and 23D, in this way the direction of spraying can be controlled to ensure only that part of the body part to be sprayed is sprayed.

[0031] As before, the pump (and chip 44) is powered from a battery or mains source 41 through a switch 42. If it is to be available for user operation, the switch 42 can be operated through an aperture 43 in the base plate. However, the switch in some arrangements may more conveniently be placed on the side of the base. Optionally the aperture 43 may house a flexible rubber cover which allows the switch 42 to be operated but which keeps dirt and moisture away from the inside of the base. In other instances, user operation of the switch 42 is prevents and there is no external access to it. For clarity, connections between the sensors 53 and chip 44 are omitted. The programming of chip 44 will follow standard practices in the field of image recognition.

[0032] The skilled person will be able readily to identify possible alternative configurations for the container mounting and/or pump for this invention. The hoops or arms need not be circular or semi-circular, and could be square, elliptical or any other suitable shape.

[0033] The chip 44 not only enables control of the spray, but for medical purposes recording, for example, of the times of treatment, to enable medical professionals to monitor whether the patient is regularly undertaking the treatments, it could go further and set off a reminder or an alarm if a pre-programmed treatment is missed, for example. The alarm can be local to the patient, or remote at control centre, a medical centre or hospital. The chip can be programed to dispense different amounts of treatment to different patients or to operate different treatment regimes for different patients; the patient being identified by use of different switches, or input codes or

other recognition system. An IR lamp and detector, other motion sensor, may be incorporated to prevent the system from operating unless a body part was present in the hoop, or between the distal ends of the arms 47 and 48 of figures 5 and 6.

[0034] In the drawings, a battery 41 is used, this could be a long life conventional battery or a rechargeable battery such as an Li-ion battery; or the battery replaced by a mains supply stepped down to a safe voltage by a transformer, with a rechargeable battery back-up – for many domestic applications this may be the preferred option as it avoids loss of power as a result of batteries being discharged. For field operations this would not be practicable and battery power would be used.

[0035] In the examples, apertures in the form of both nozzles and self-sealing slits have been described and these can be interchanged in the examples.

[0036] The multi-tube approach of figures 4 and 5 can be used with the closed hoop device of figures 1 to 4.

[0037] In a further arrangement of the examples of figures 1 to 6 the tubes can be of different diameters, In still further arrangement, rather than using multiple tubes, a single tubes, whose diameter changes as it passes through each arm 47 and 48 in figures 5 and 6 or each side of the hoop 21 in figures 1 to 4 can be used instead to similar effect.

[0038] As a further development rather than using separate tubes 23, 23A, 23B, 23C, 23D, the tubes can be moulded as part of a moulding for the hoop 21 of figures 1 to 4 or the arms 47 and 48 in in the devices of figures 5 and 6.

[0039] Examples of applications of the device include spray treatments of arthritis, burns, venous ulcers, chronic wounds/ infections, eczema and other exfoliating conditions, and in trauma, eradication of MRSA from patients and ward staff/visitors, and disinfection. It can also be used for spray on wound sealing and dressings. A particular use is in treatment or applying temporary spray on dressings to patients in emergency evacuations.

[0040] The range of products that may be applied using the device includes, disinfectant/ cleaning agents (such as iodine), medicinal agents (e.g. coagulants, repair stimulants, antibiotics, analgesics, anti-inflammatory agents), protective layers (to protect wound from air/infection/abrasion, to prevent loss of body fluids and loss of drugs), Immobilisers (e.g. plaster or polymer).

[0041] The device of the invention can also be used for non-medical purposes such as treatments applying perfumes, sun tan lotions, soaps and the like to parts of the body.

[0042] In the configuration of figures 1 to 4 the dispenser may comprise a plurality of hoops e.g. hand and finger sized, with sensors to determine which one to activate.

[0043] The sensors 53 could be IR, ultrasonic or other, some of which could give distance and/or orientation information. For example, if a hand is inserted off-centre, the device

could adjust the sprays accordingly.

[0044] It is possible, if the pressurised containers are used a container outlet is coupled directly to manifold 25 and the pump 31 and its control systems omitted.

[0045] Such an arrangement is shown in figure 7.

[0046] In figure 7, a dispenser 20 comprises two semi-circular arms 47 and 48 (as in figures 5 and 6) pivoted at pivot 45 together at their lower proximal ends, and in the closed position butting against one another at their distal ends 49. Optionally there is a spring 51 associated with the pivot 45, urging the arms to close together at the distal ends 49. As shown in figure 7, when closed together the two semi-circular arms 47 and 48 form a hoop 21, however the two arms 47 and 48 could take up the form as a C or U shape rather than a hoop.

[0047] A plurality of tubes, 23A, 23B, 23C, 23D, connect a manifold 25 at the proximal ends of the arms 47 and 48 to nozzles 52A, 52B, 52C 52D distributed around the inside of the arms 47 and 48 and located at the ends 27A, 27B, 27C, 27D of the tubes 23A, 23B, 23C, 23D. Self-sealing slits could replace the nozzles 52A, 52B, 52C and 52D. The tubes 23A, 23B 23C and 23D are mounted in grooves 22 in the inner surfaces of the arms 47 and 48. Each individual tube 23A, 23B, 23C 23D connects an individual a nozzle 52A, 52B, 52C and 52D to the manifold 25 as in figure 5. In this way, the fluid pressure at each nozzle is substantially the same; the flow rate of the fluid from one aperture is substantially the same as that from another aperture.

[0048] As In the arrangement of figures 5 and 6, the arms 47 and 48 can be opened and a body part inserted between their distal ends 49. The orifice 61 of a container 60 containing the treatment and gas under pressure is connected to the manifold 25, an O-ring 62 sealing between the manifold and the orifice. The container 60 is of conventional design for a pressurised fluid dispensing container. When the dispenser 20 and patient are ready, the actuator 63 is depressed against a plug 68 and spring 65 opening an aperture 64 releasing the treatment rising up dip tube 66 from near the bottom of the container under pressure through the manifold 25, into tubes 23A, 23B, 23C and 23D and our of nozzles 52A, 52B 52C and 52D, spraying onto a body part contained within the dispenser.

[0049] Once treatment is complete, downward pressure on the dispenser 20 is released; spring 65 urges plug 68 upwards (as seen in the drawing) against a gasket 69 at the top of the container 60 closing the aperture 64, and thus stopping the flow of treatment.

[0050] In figure 7, the pivoted arms 47 and 48 can be replaced with a fixed hoop as illustrated in figures 1 to 4. Likewise the four tubes 23A, 23B 23C 23D can be replaced with single tubes 23 in each side of hoop as shown in figures 1 to 4.

[0051] There may be some drop in the pressure as the container is depleted in the tubes 23 or 23A, 23B, 23C, 23D, but this may not be critical in all cases. If the drop is critical

then a pump arrangement as in figures 1 to 6 should be retained or the container replaced.

AMENDED CLAIMS
received by the International Bureau on 27 June 2016 (27.06.2016)

1. A dispenser for spraying a fluid onto a body part of a human or animal, said dispenser comprising apertures (28, 52) in a hoop, C- or U- structure from which apertures the fluid may be sprayed onto a body part placed in the dispenser, and in which the apertures are connected to a source of fluid to be dispensed under pressure (31, 60) through a manifold (25), and having one or a plurality of tubes (23, 23A, 23B , 23C, 23D) connecting the manifold to the apertures and in which the flow rate of the fluid from one aperture is substantially the same as that from another aperture located further away from the source of fluid under pressure.
2. A dispenser according to claim 1 in which the source of fluid to be dispensed is a pressured container (60) connected to the manifold (25).
3. A dispenser according to claim 1 in which the source of fluid to be dispensed is a pump (31) to pump the fluid from a container (32) connected to the inlet of the pump (31) to the outlet of the pump (31) which is connected to the manifold (25).
4. A dispenser according to claim 3 additionally comprising sensors (53) connected to a programmable chip (44), said sensor and chip combination identifying the presence of a body part in the dispenser the programmable chip controlling the opening and closing of valves allowing or preventing the entry of fluids into tubes (23, 23A, 23B, 23C, 23D) in response to the orientation sensed.
5. A dispenser according claim 3 or 4 additionally comprising sensors (53) connected to a programmable chip (44), said sensor and chip combination identifying the presence of a body part in the dispenser and its orientation with respect to the apertures (52A, 52B, 52C and 52D), the programmable chip controlling the opening and closing of valves allowing or preventing the entry of fluids into individual tubes (23A, 23B, 23C, 23D) in response to the orientation sensed.
6. A dispenser according to claim 3, 4 or 5 comprising a programmable chip (44) to control the times of operation of the pump.
7. A dispenser according to any one of claim 3 to 6having one or more sensors (53) in conjunction with a programmable chip (44) to allow the pump (31) to operate on detection of a body part.

8. A dispenser according to claim 7 in which operation of the pump occurs only when the correct body part is identified by a sensor.
9. A dispenser according to one of claim 3 to 8 including, in combination, a coded container containing a fluid to be dispensed, coding being used by the dispenser to control the time and/or length of the treatment and/or the pressure of the treatment in the tube(s).
10. A dispenser according to any one of claims 1 to 9 comprising at least one hoop.
11. A dispenser according to claim 11 comprising a plurality of hoops.
12. A dispenser according to claim 10 or 11 in which each hoop has a sensor, the spray from the hoop only being activated when the sensor senses the presence of a body part within the hoop.
13. A dispenser for spraying a fluid onto a body part according any one of claims 1 to 9 comprising a pair of concentric semi-circular arms (47, 48), the arms being pivoted together at the proximal end of each arm, apertures (28, 52) from which the fluid may be sprayed onto a body part inside a shape formed when the arms are moved towards one another,.
14. A dispenser according to claim 14 in which the arms form a hoop when moved towards one another.
15. A dispenser according to claim 14 in which the arms form a C or U shape around a body part when moved towards one another.
16. A drug or medical treatment dispenser according to any one of claims 14to 16 with a spring tending to urge the distal ends of the arms towards one another.
17. A dispenser according to any preceding claim characterised in that the apertures (28A, 28B, 28C, 28D, 52A, 52B, 52C and 52D) are of increasing size to compensate for the pressure drop.as distance from the source of fluid under pressure increases.
18. A dispenser according to any preceding claim in which the tubes are of a changing diameter to compensate for the pressure drop.as distance from the source of fluid under pressure increases.

19. A dispenser according to claim 18 in which the diameter of the tubes is stepped along their length.
20. A dispenser according to any preceding claim in which each individual aperture (52A, 52B, 52C, 52D) is connected by a separate tube (23A, 23B, 23C and 23D) to the manifold.
21. A dispenser according to claim 20 in which the tubes (23A, 23B, 23C, and 23D) are of different diameters.

Fig. 1

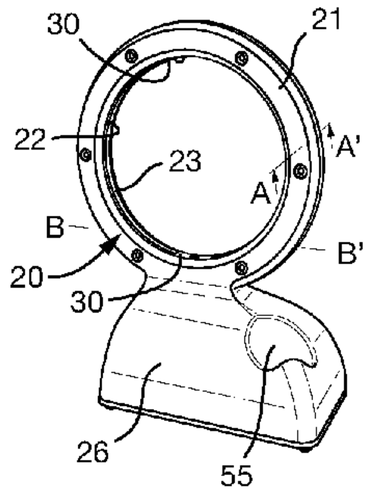

Fig. 2

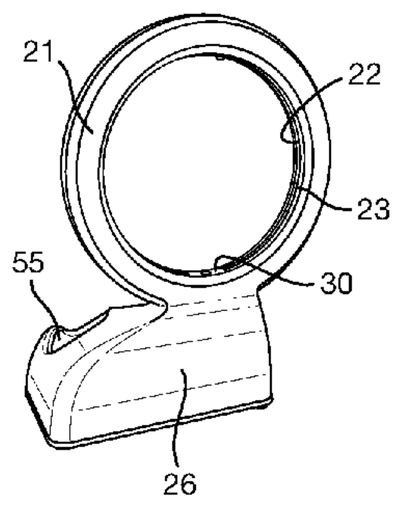

Fig. 3

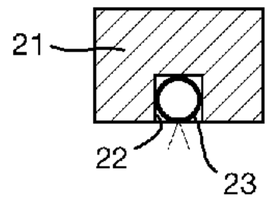

Fig. 4

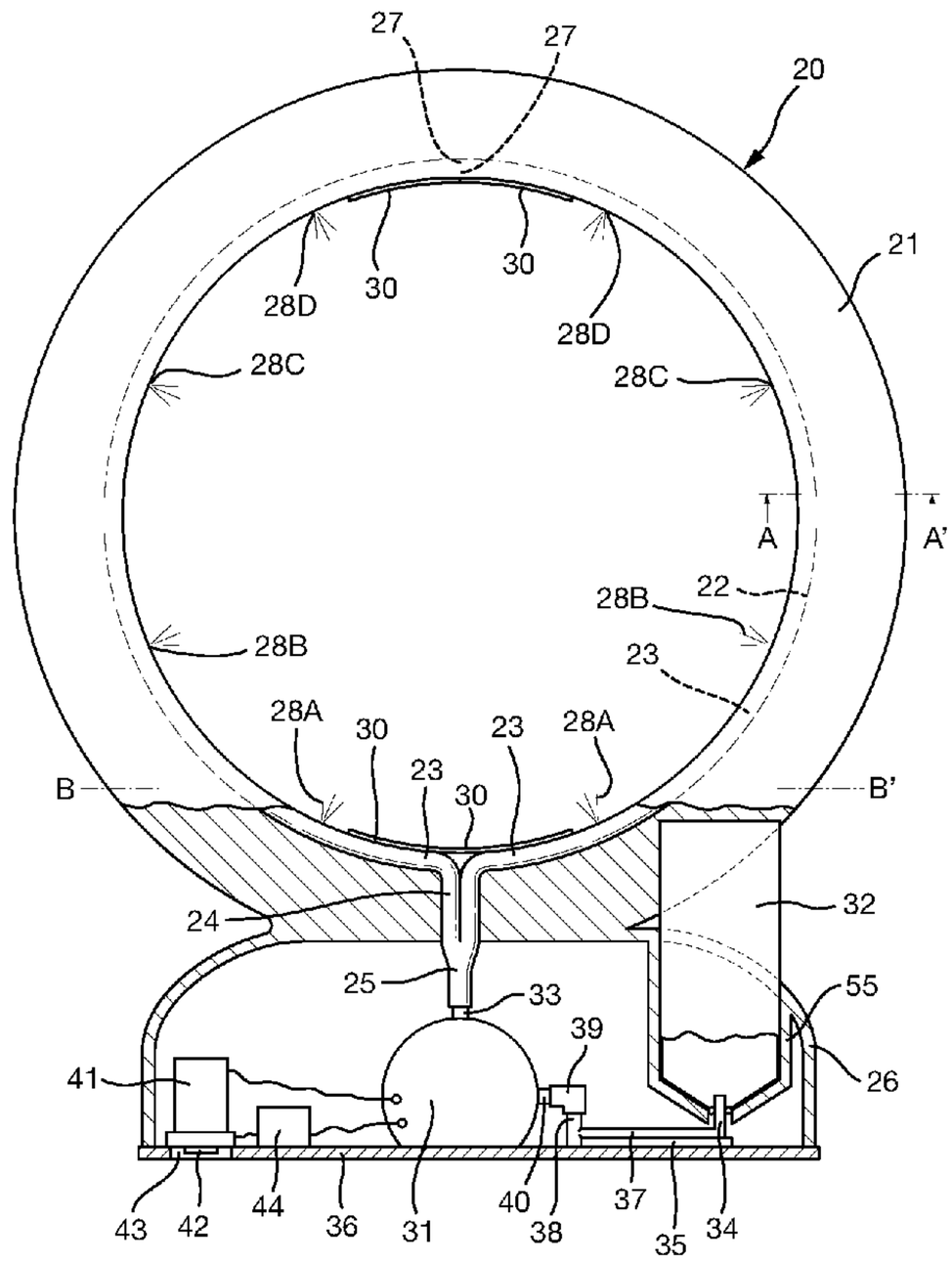
27
27
20
21
28D
30
30
28D
28C
28C
A
A'
22
28B
28B
23
28A
30
23
30
23
28A
B
B'
24
32
25
33
55
39
26
41
43
42
44
36
31
40
38
37
35
34

Fig. 5

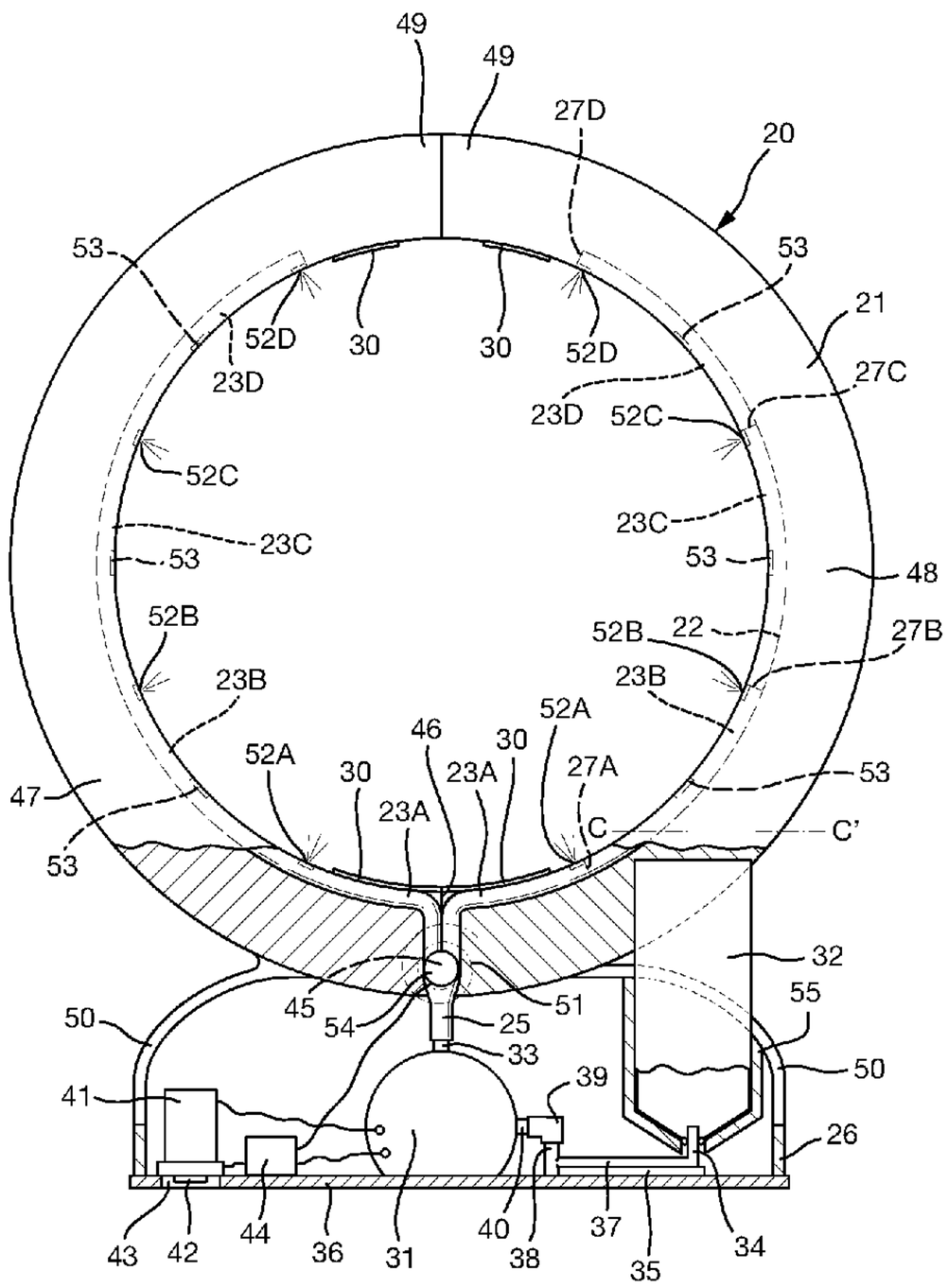
49
49
27D
20
53
53
21
52D
30
30
52D
23D
23D
52C
27C
52C
23C
23C
53
53
48
52B
52B
22
27B
23B
23B
52A
46
30
52A
30
23A
23A
27A
53
47
C
C'
53
32
45
54
25
51
55
50
50
33
41
39
26
44
40
37
43
42
36
31
38
35
34

Fig. 6

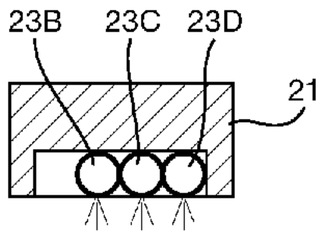

Fig. 7

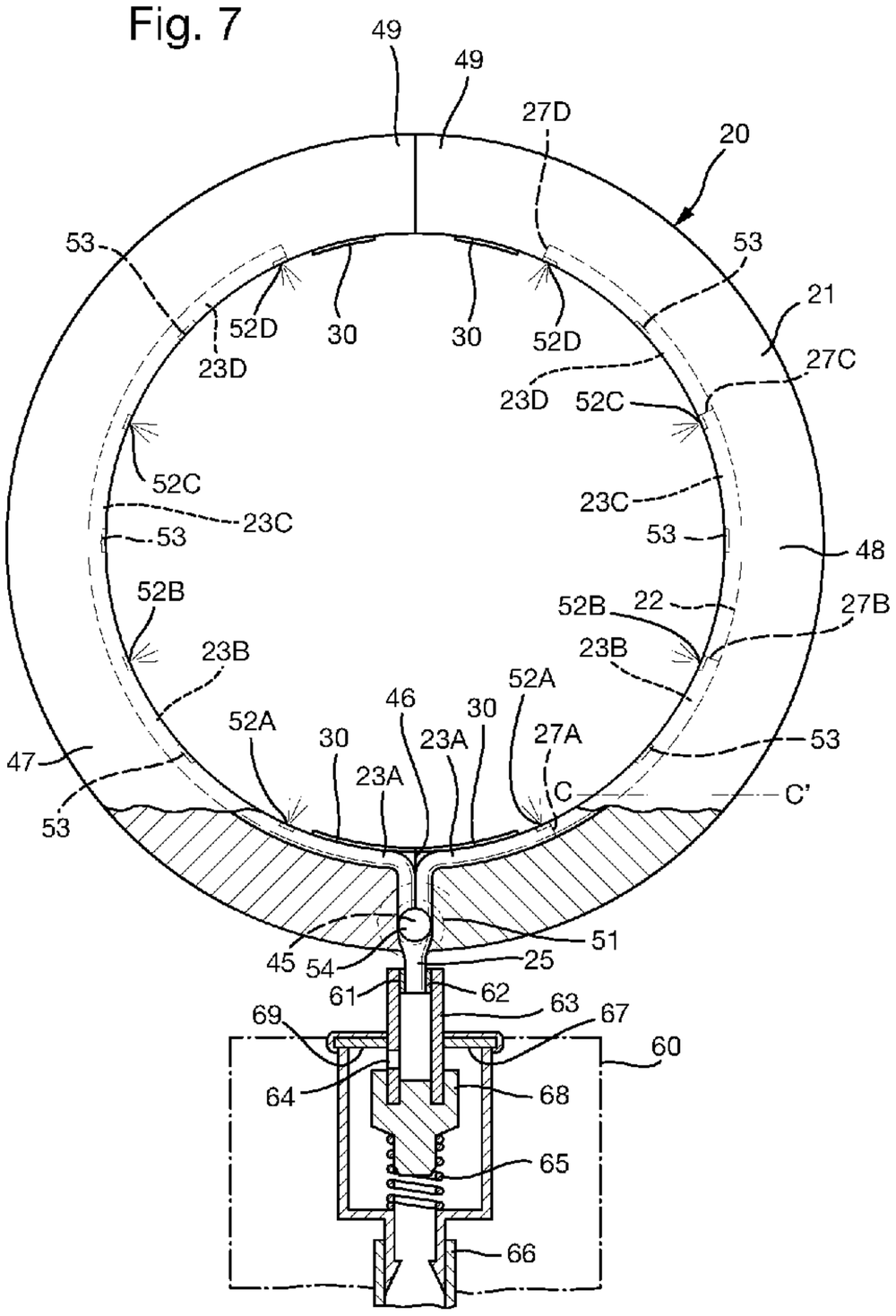
49
49
27D
20
53
53
21
52D
30
30
52D
23D
23D
27C
52C
52C
23C
23C
53
53
48
52B
52B
22
27B
23B
23B
52A
46
30
52A
30
23A
27A
53
47
23A
C
C'
53
51
45
54
25
61
62
63
67
69
60
64
68
65
66

Fig. 5

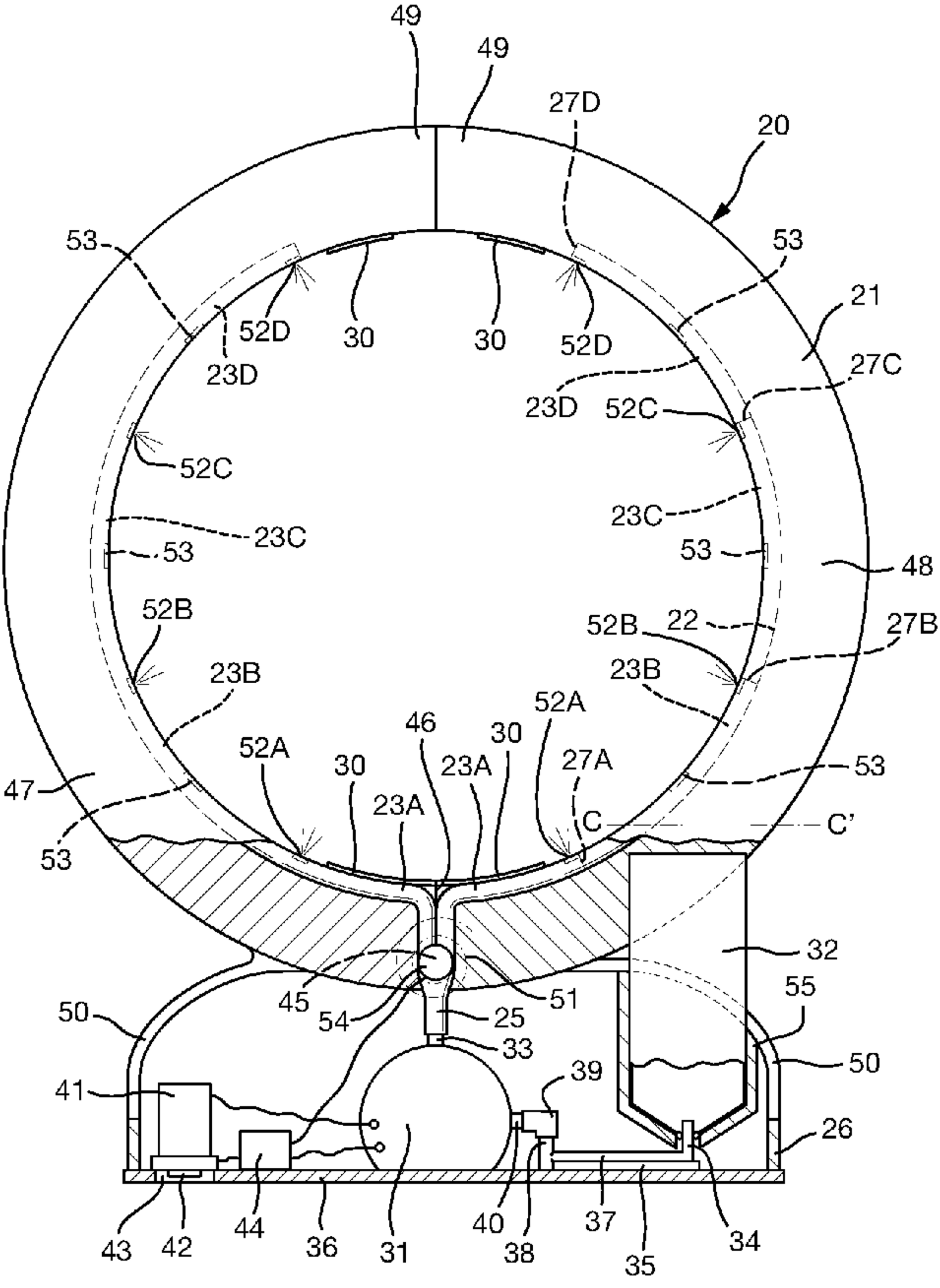
49
49
27D
20
53
53
52D
30
30
52D
21
23D
27C
23D
52C
52C
23C
23C
53
53
48
52B
52B
22
27B
23B
23B
52A
46
30
52A
47
30
23A
27A
53
23A
C
C'
53
32
45
51
55
54
25
50
33
50
39
41
26
43
42
44
36
31
40
38
37
35
34