US 20140151965A1

(19) **United States**

(12) **Patent Application Publication**

(10) **Pub. No.: US 2014/0151965 A1**

(43) **Pub. Date: Jun. 5, 2014**

Garas

(54) **SCORING SYSTEM FOR ARCHERY**

(76) Inventor: **Mihaly Garas**, Dunakeszi (HU)

(21) Appl. No.: **14/131,018**

(22) PCT Filed: **May 25, 2012**

(86) PCT No.: **PCT/HU2012/000044**

§ 371 (c)(1),
(2), (4) Date: **Jan. 6, 2014**

(30) **Foreign Application Priority Data**

Jul. 7, 2011 (HU) ..... P 1100367
May 18, 2012 (HU) ..... P 1200292

Publication Classification

(51) **Int. Cl.**
F41J 3/00 (2006.01)

(52) **U.S. Cl.**
CPC ***F41J 3/0004*** (2013.01)
USPC **273/371**

(57) **ABSTRACT**

The subject of the invention is a scoring system for archery, which is capable of detecting the scores in an electronic manner, and it is suitable for evaluation and displaying the obtained data.

The system according to the invention contains arrow catch (**1**), which is provided with detector unit (**3**) that detects the impact of arrow (**2**) and determines its position, and also contains a processing and evaluating unit (**4**) which is in wired or in wireless connection, and a display unit (**5**). It is characterised by that, the detecting unit (**3**) is established as the frame or in the frame of the arrow catch (**1**), and the detectors (**22**) or distance meters (**30**) used for determining the position of arrows (**2**) in the target (**6**) are mounted on the position detecting carriages (**13**, **14**) that move in X-Y directions, the driving of which is made by one of the known methods along the X-Y coordinates linearly along respective straight lines, and preferably a step counter, encoder (**15**) is used for accurately determining the position of the movement along the straight line, which gives the position on the basis of pulses counted in proportion to the movement.

In one preferred embodiement of the system according to invention a number of arrow catches (**1**) are used, together with a number of associated detecting units (**3**), as well as one or more display units (**5**) belonging to the detecting units (**3**) are used.

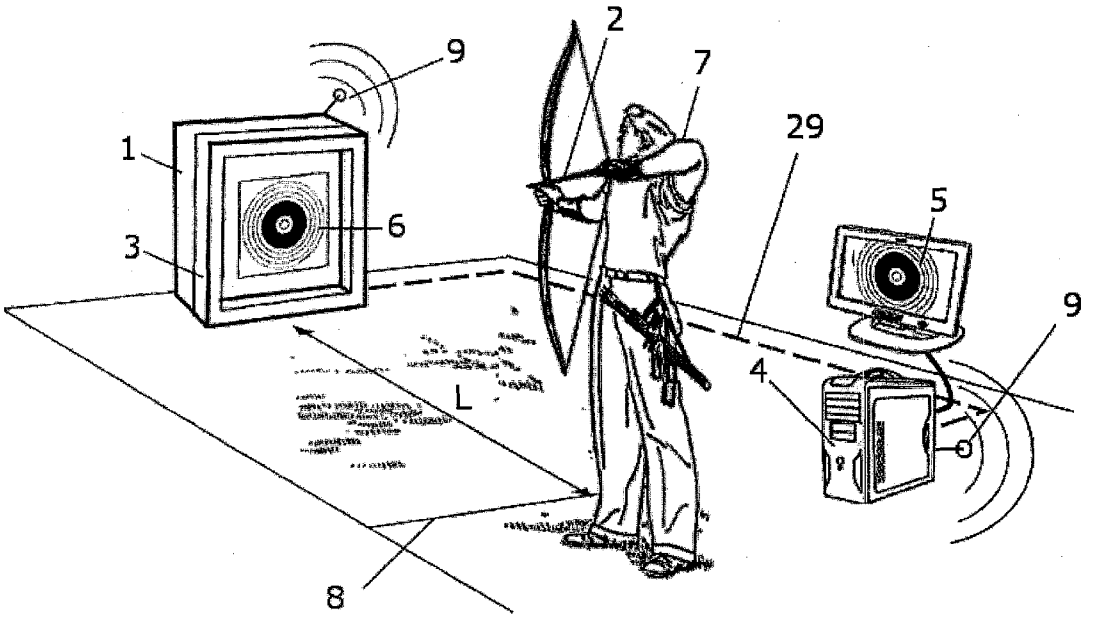

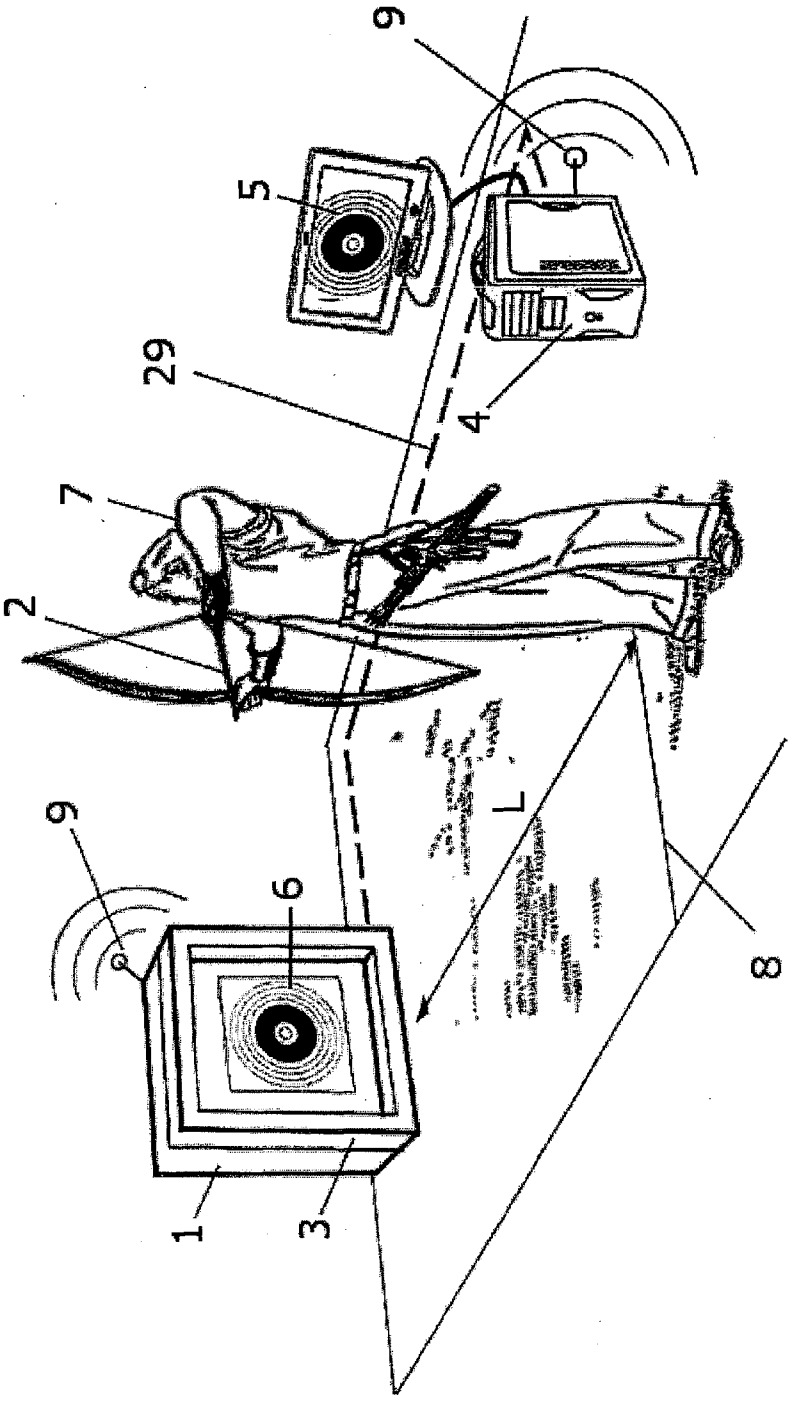

FIG 1

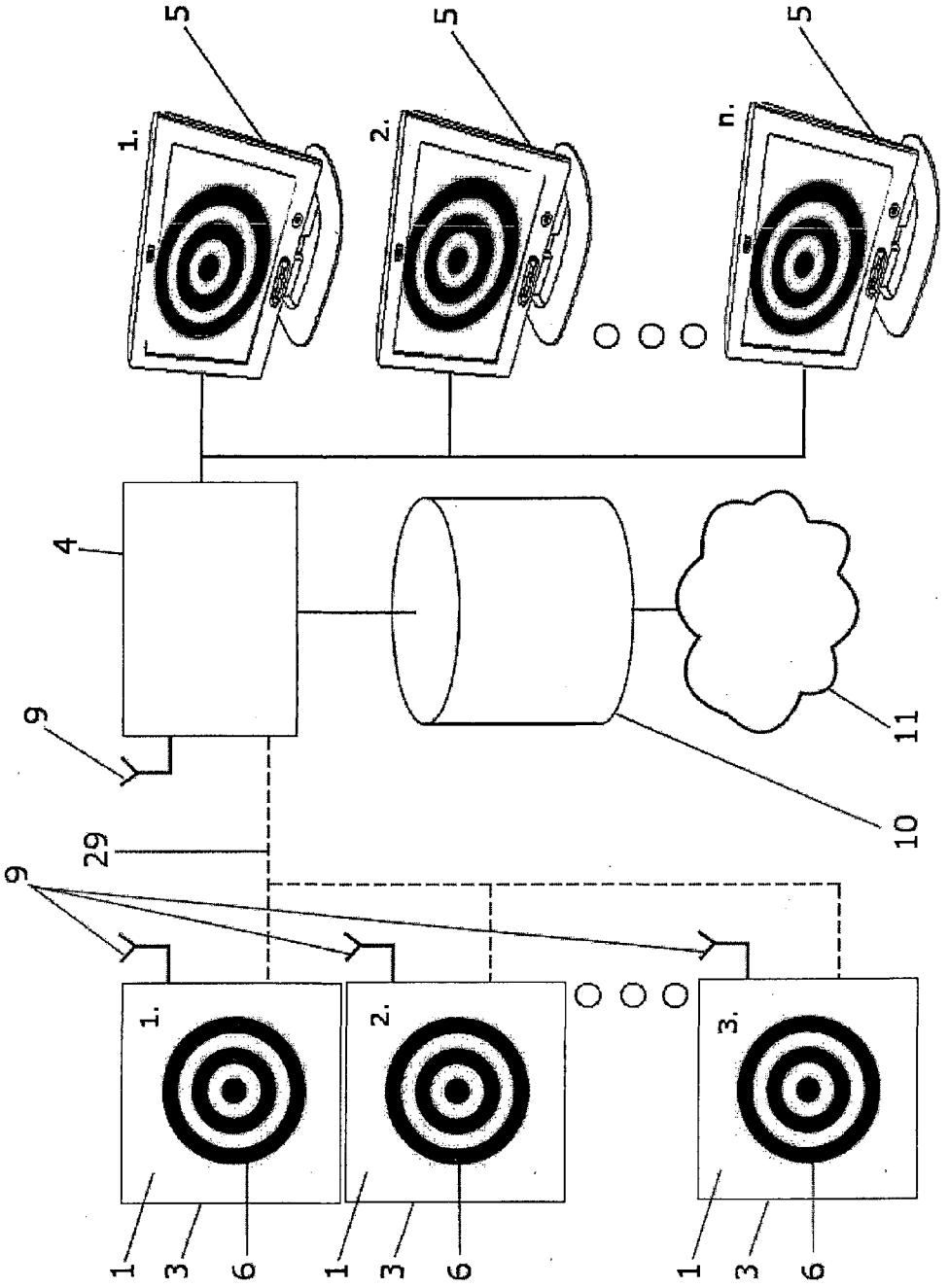

FIG 2

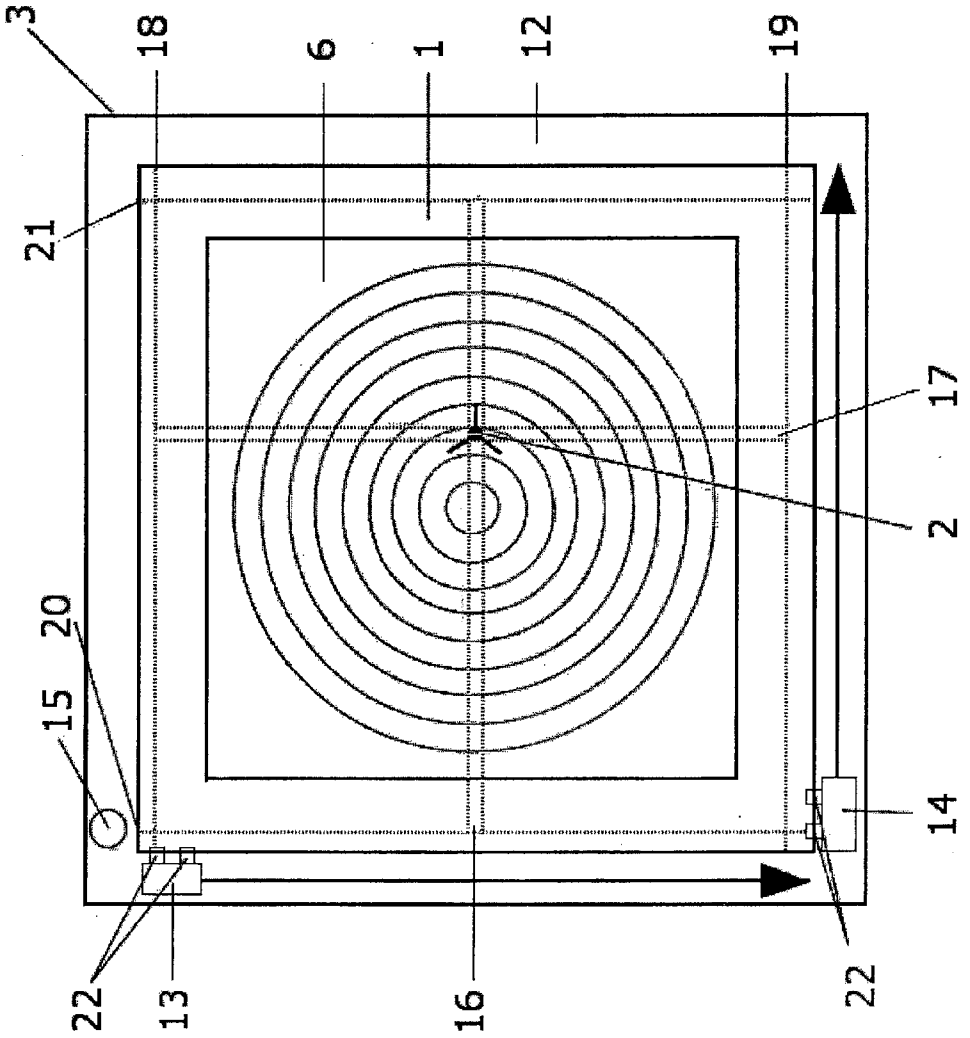

FIG 3

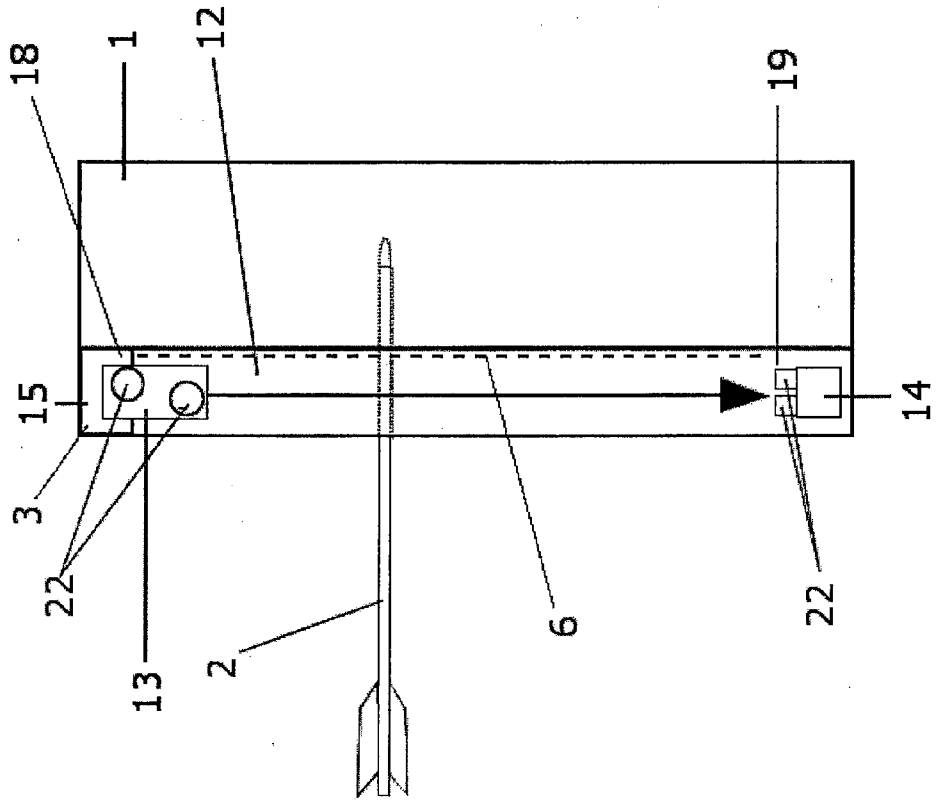

FIG 4

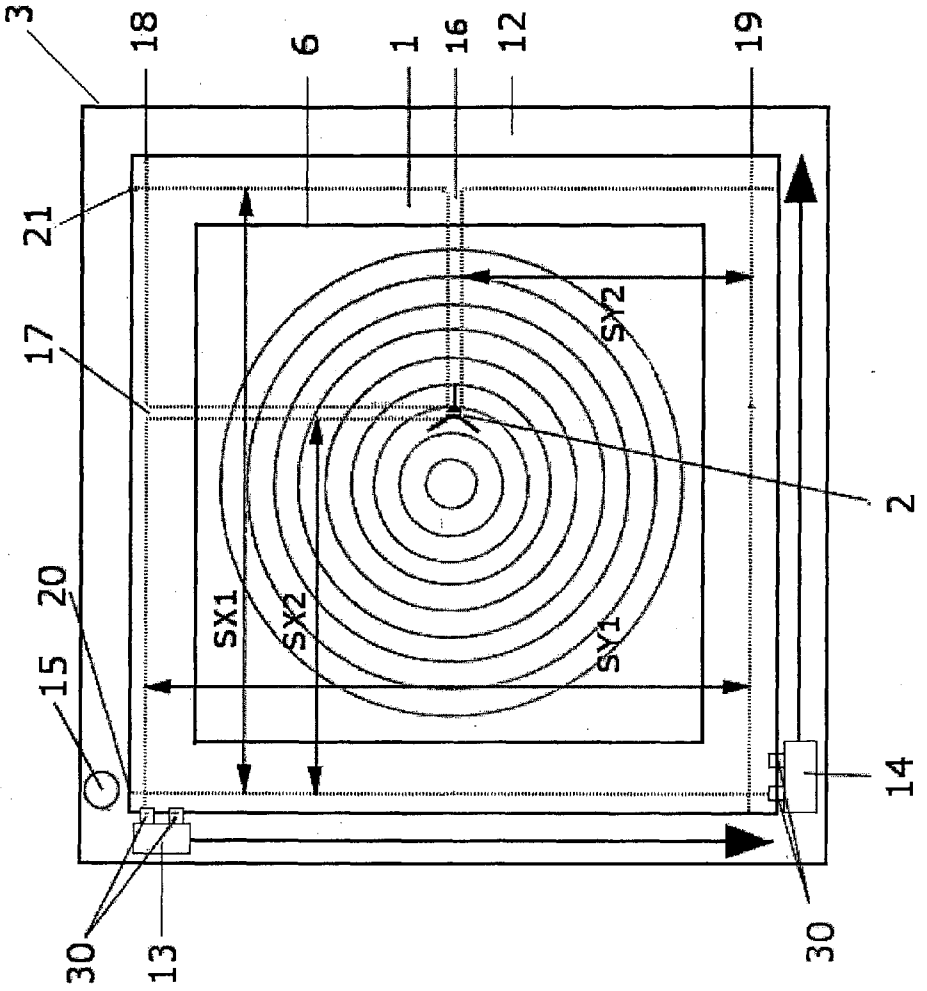

FIG 5

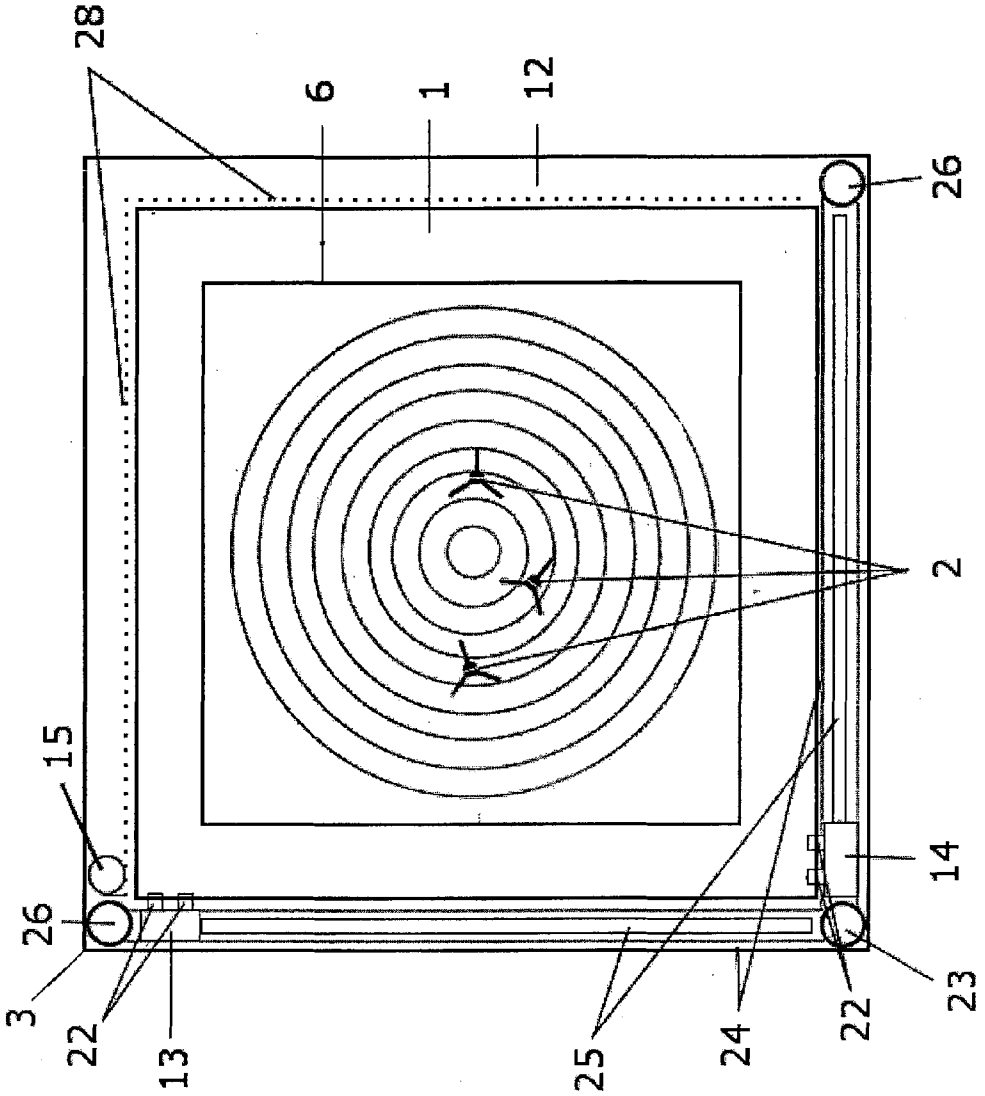

FIG 6

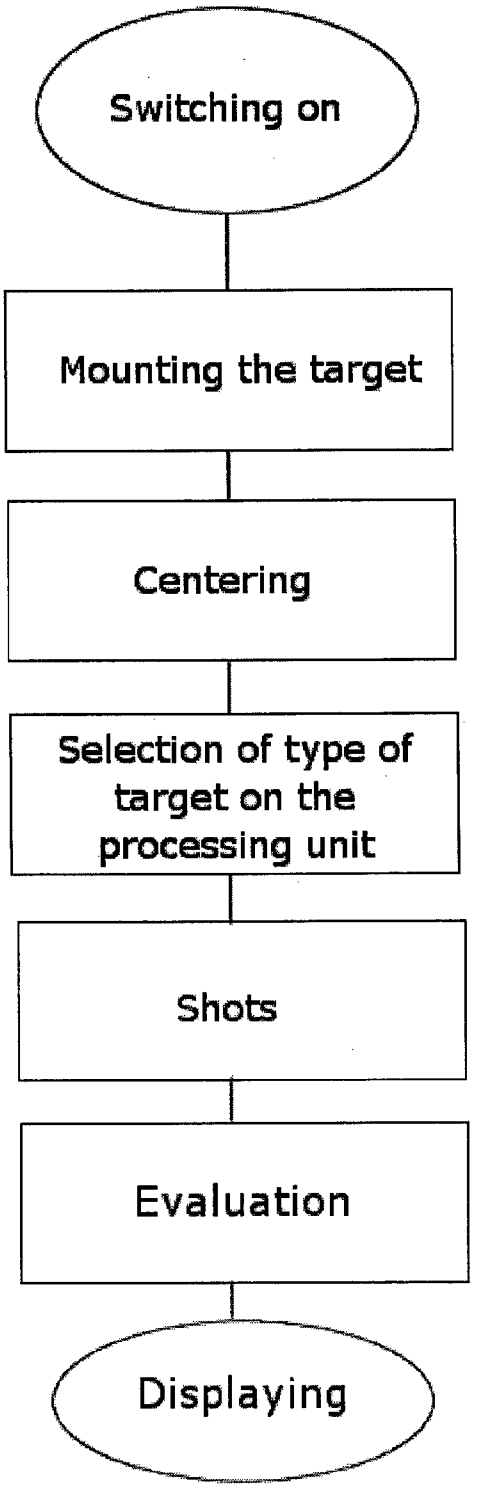
Switching on
Mounting the target
Centering
Selection of type of target on the processing unit
Shots
Evaluation
Displaying

FIG 7

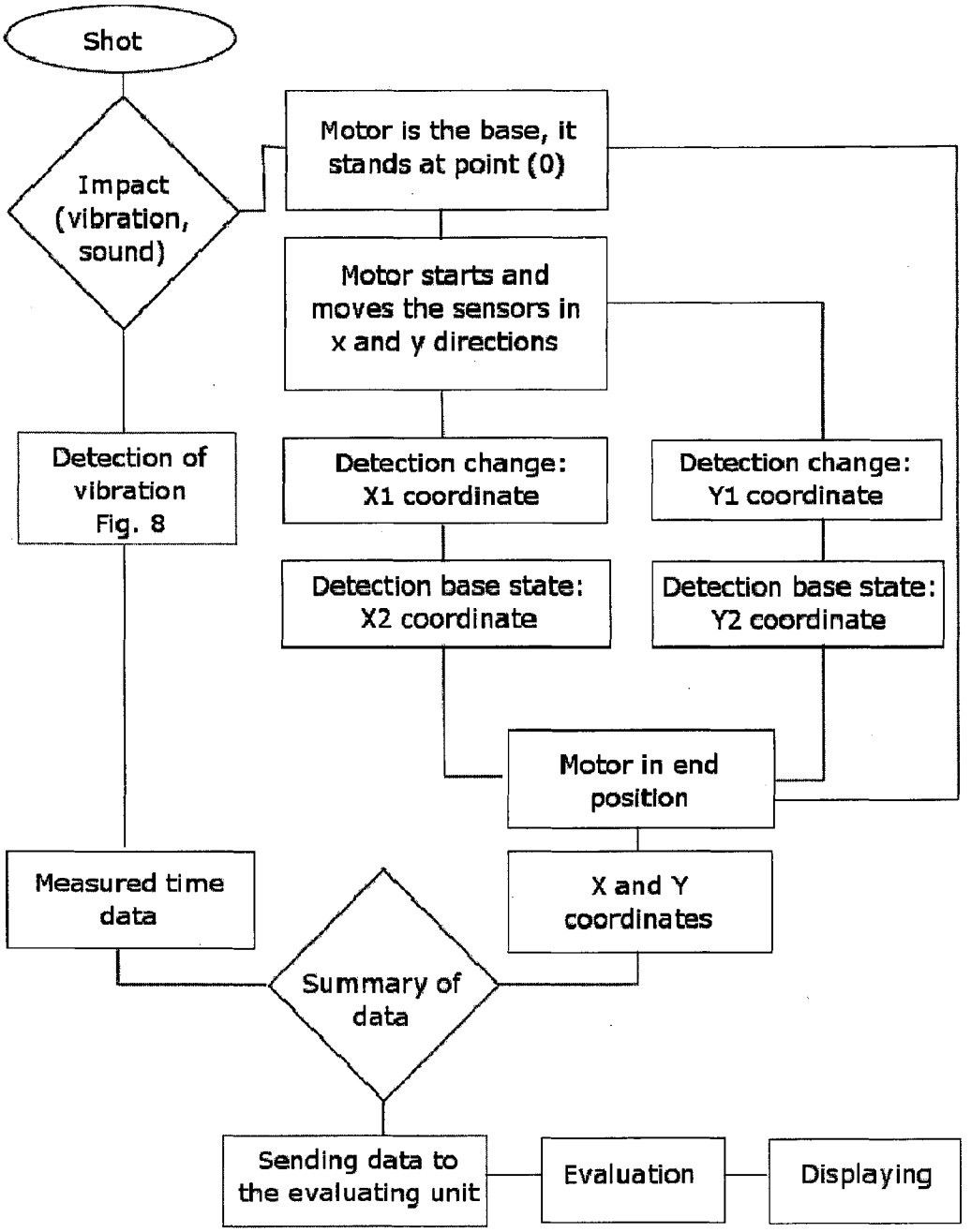
Shot
Impact (vibration, sound)
Motor is the base, it stands at point (0)
Motor starts and moves the sensors in x and y directions
Detection of vibration Fig. 8
Detection change: X1 coordinate
Detection change: Y1 coordinate
Detection base state: X2 coordinate
Detection base state: Y2 coordinate
Motor in end position
Measured time data
X and Y coordinates
Summary of data
Sending data to the evaluating unit
Evaluation
Displaying

FIG 8

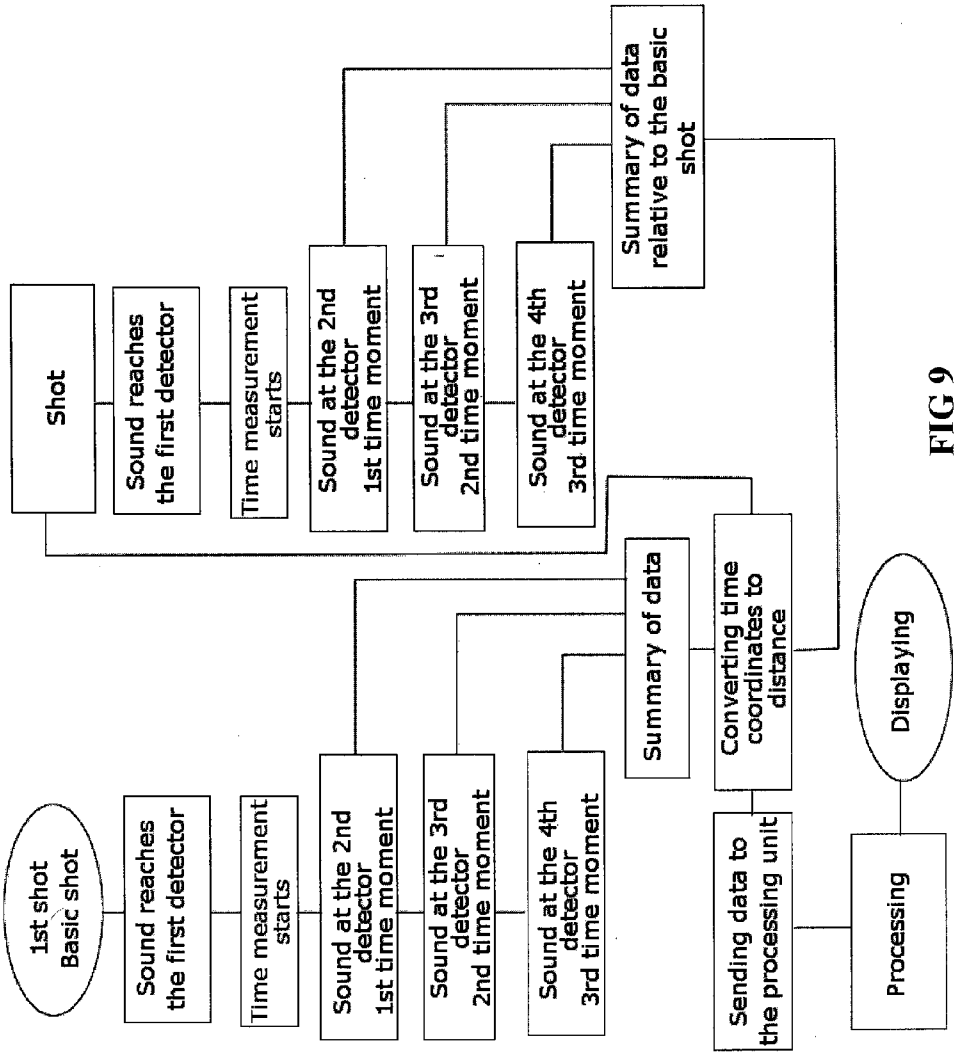
Shot
Sound reaches the first detector
Time measurement starts
Sound at the 2nd detector 1st time moment
Sound at the 3rd detector 2nd time moment
Sound at the 4th detector 3rd time moment
Summary of data relative to the basic shot
1st shot Basic shot
Sound reaches the first detector
Time measurement starts
Sound at the 2nd detector 1st time moment
Sound at the 3rd detector 2nd time moment
Sound at the 4th detector 3rd time moment
Summary of data
Converting time coordinates to distance
Sending data to the processing unit
Processing
Displaying

FIG 9

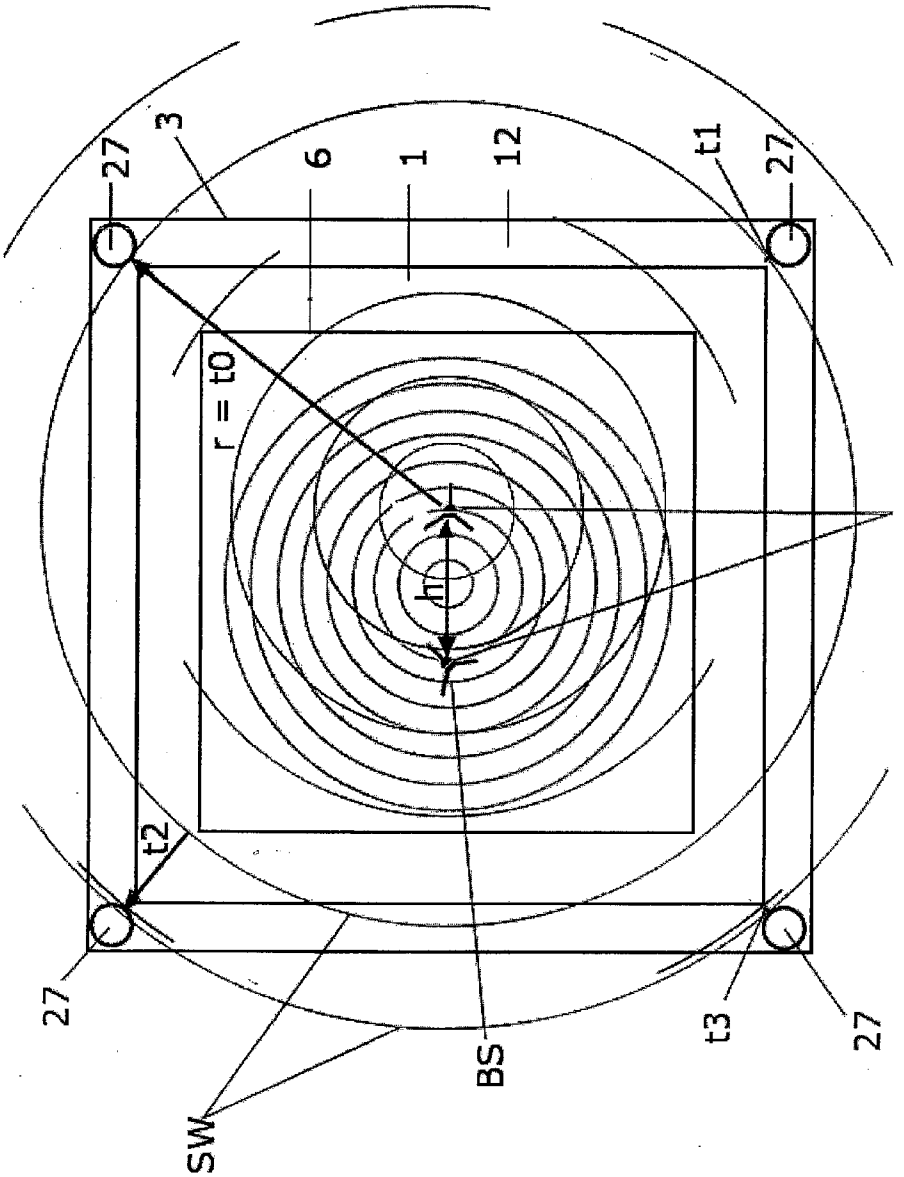

FIG 10

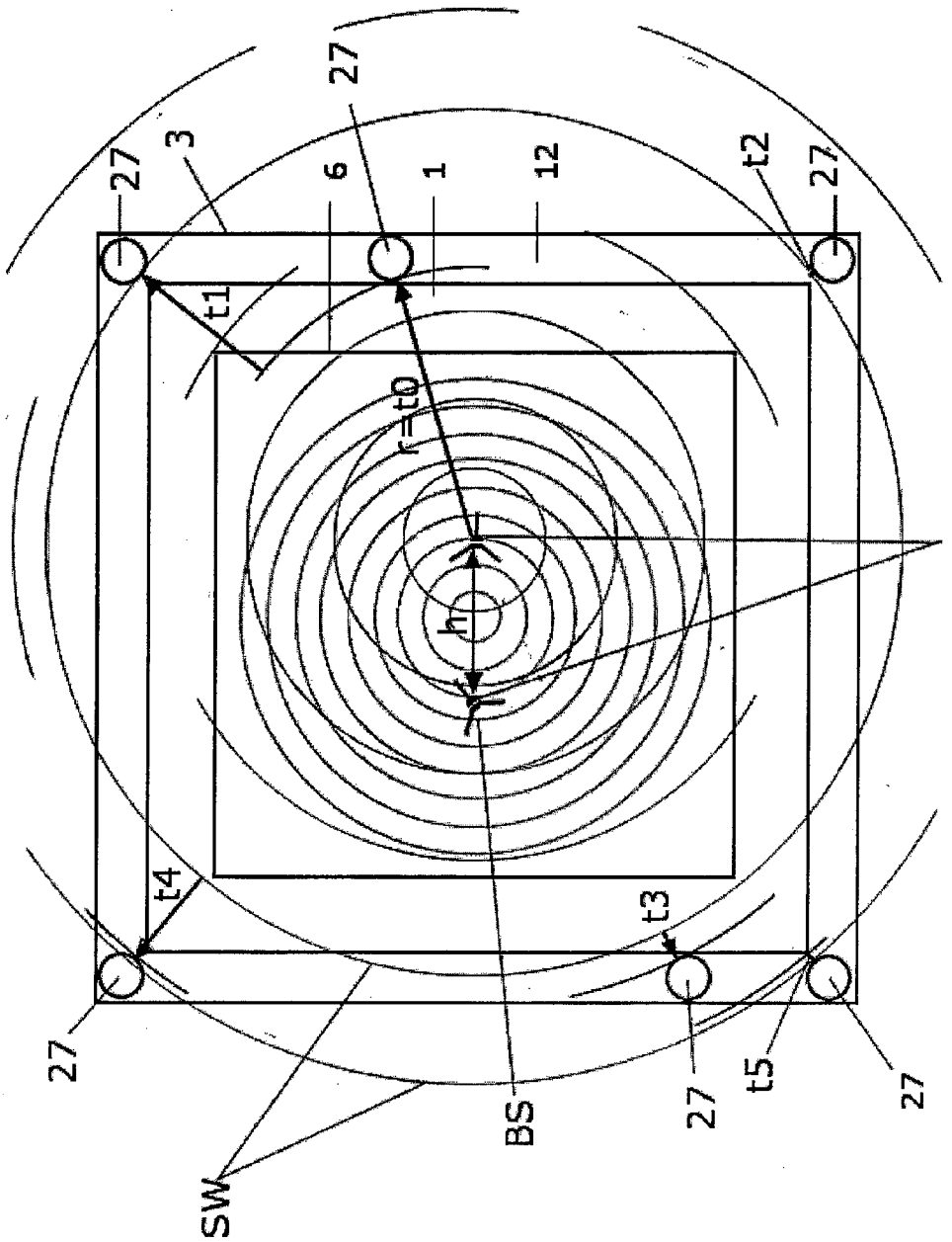

FIG 11

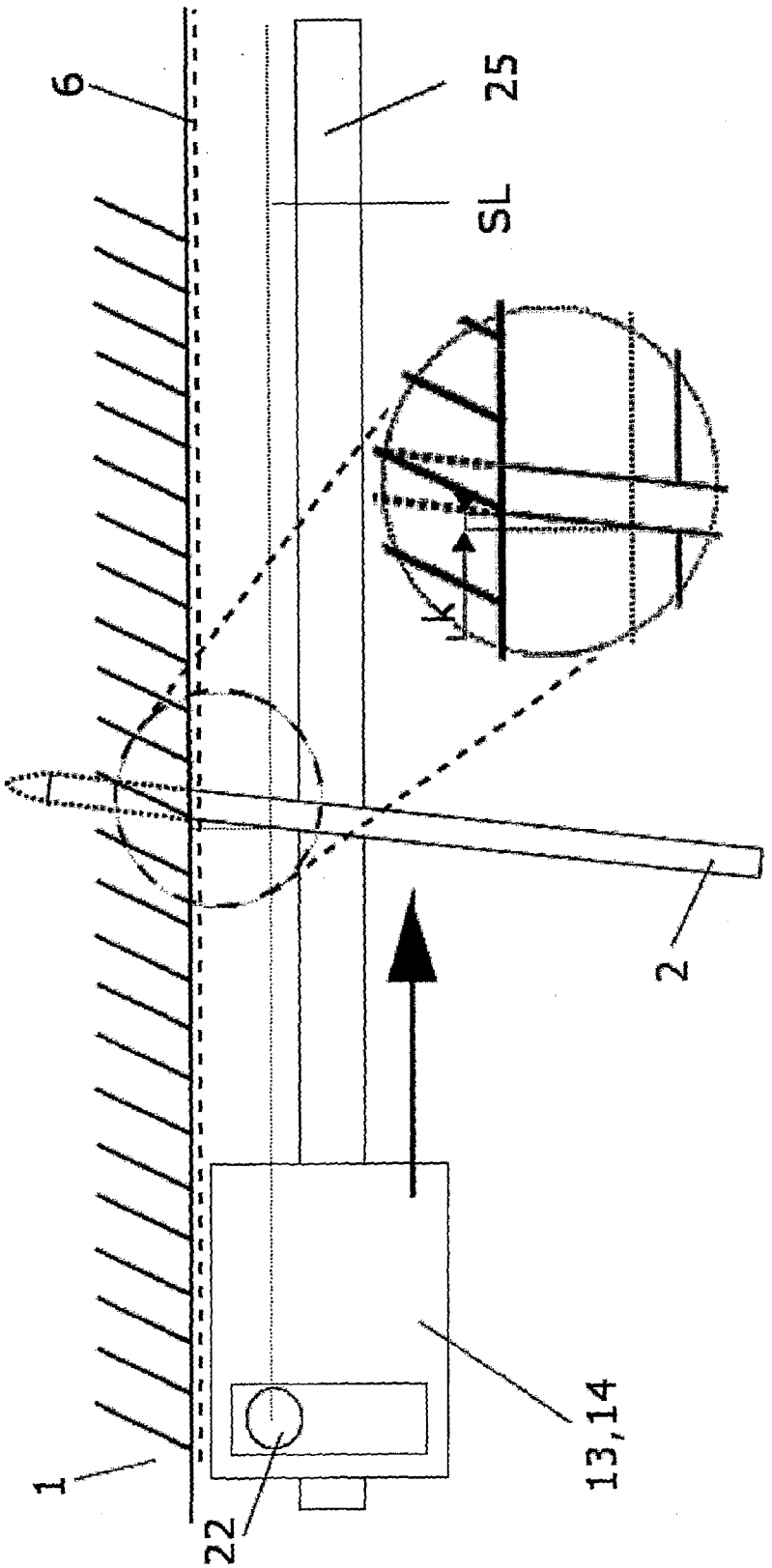

FIG 12

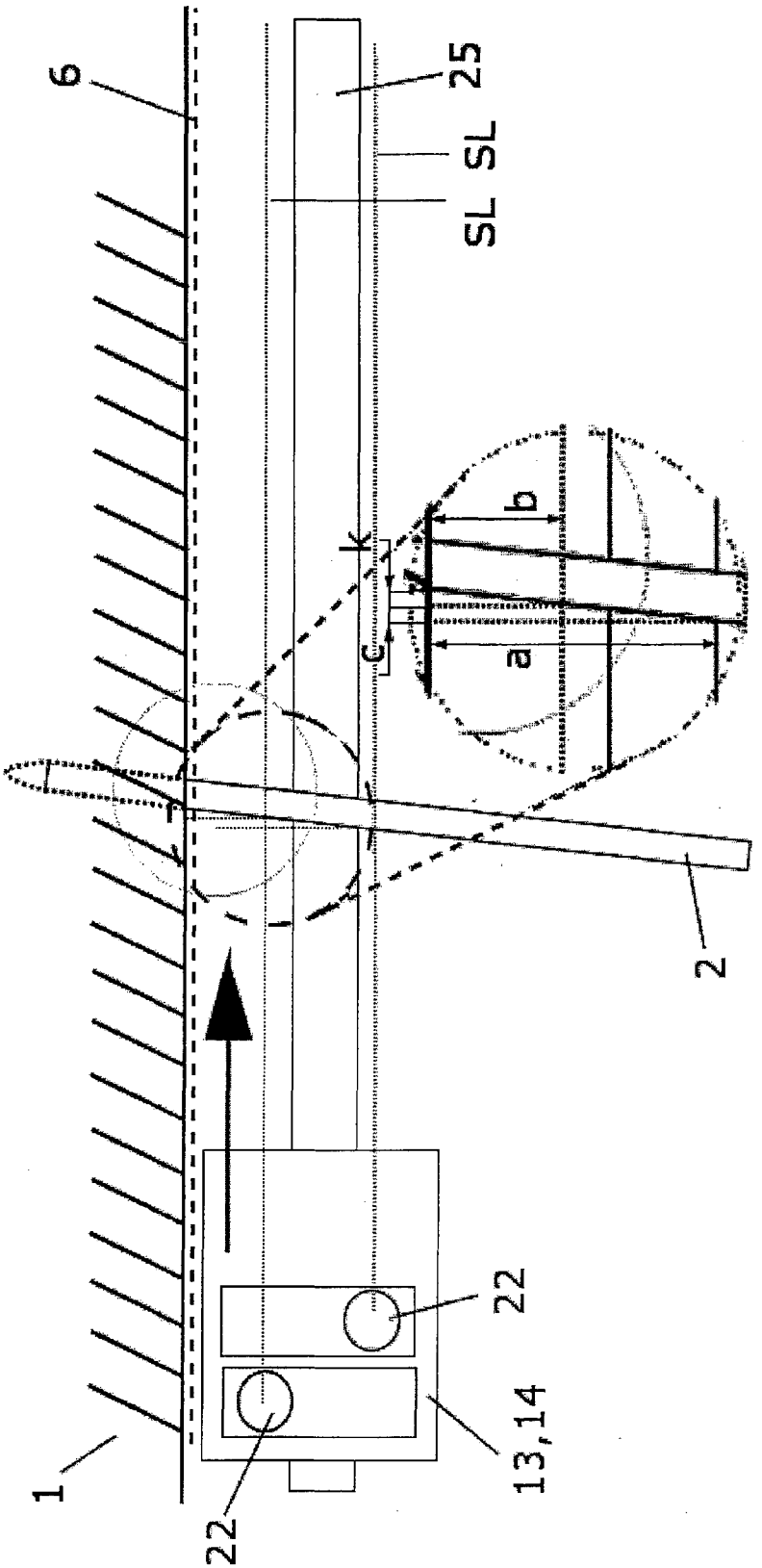

FIG 13

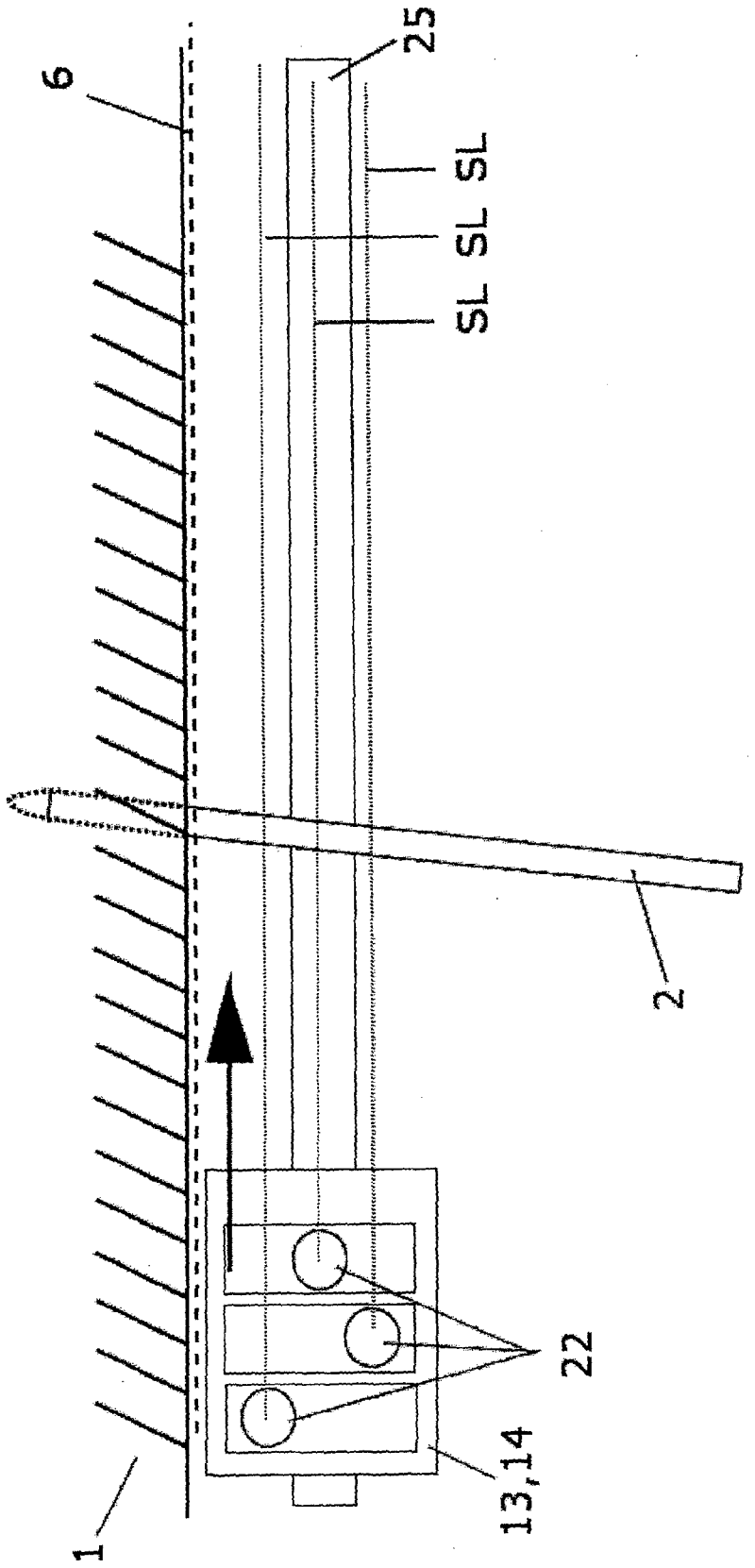

FIG 14

SCORING SYSTEM FOR ARCHERY

[0001] The subject of the invention is a scoring system for archery, which is capable of detecting the scores in an electronic manner, and it is suitable for evaluation and displaying the obtained data.

[0002] One of the greatest unsolved problem in the archery as a sport is the quick evaluation of scores, their summary and display. According to the present rules of the championship, this is still performed manually with human intervention, which slows down the pace and process of the competition significantly.

[0003] According to the state of the art the KR 20110009865 patent application maker known a system for simulation of archery shooting. The KR 20090077357, the US2009134581 and the US2011074112 patent documents make known technical solutions in connection with the archery.

[0004] The KR 20110009865 patent application maker known a system for simulation of archery shooting. The system measures the shooting force and the slope of a bow when an arrow is shot, and simulates, in a threedimensional space, the trace of the arrow shot by the bow. The system comprises: a measurement data receiving unit which receives bow deformation data, bow slope data, or target point data; a shooting vector calculation unit which calculates a shooting vector by calculating a shooting force in accordance with the deformation data received at the measurement data receiving unit using the correction table generated by matching the bow deformation data and shooting force which is the size of a bowstring drawing force, and by calculating a shooting direction using the bow slope data or target point data received at the measurement data receiving unit; a shooting simulation unit which simulates, in a threedimensional virtual space, the trace of the arrow shot by a take-down bow using the shooting vector calculated by the shooting vector calculation unit; and an image generating unit which generates an image of the three-dimensional virtual space including the trace of the arrow simulated by the shooting simulation unit, such that the image is displayed on a screen. The system of the present invention ensures the durability of a sensor, and measures the shooting force in a more accurate manner to improve the accuracy of the simulation.

[0005] The KR 20090077357 patent document makes known a hit alarming apparatus of an archery target plate, which is provided to secure safety of a signalman informing hit of the target plate in the archery game and to deliver whether target is hit properly or not. A hit alarming apparatus of an archery target plate comprises a safe box and a flag driving unit. The safety box consists of a glass window and a base and provides the space which is safe from an arrow to a signalman. The flag driving part is embedded in a flag driving box attached to one side of the ceiling inner wall of the safe box and is meshed with the driven shaft by a driving motor or a manual handle and swivels a flag.

[0006] The US 2009134581 patent document makes known an archery target and method of making the same. The archery target configured to absorb an impact of an associated arrow. The target having a stand having a top side and a bottom side and the bottom side including a support structure for supporting the archery target on an associated surface. The top side including a target rest shaped to receive a portion of an outer perimeter of a cylindrical target portion in shaped engagement. The target portion having a front side and a back side which extend between the outer perimeter and define a target depth and including a central core extending between front and back sides of the target. The core defining a target axis coaxial with the outer perimeter and the target portion further including at least one general planar sheet having side edges defining a sheet width that is generally equal to the target depth and a sheet surface between the side edges. The at least one sheet being wrapped about the core and the target axis and the side edges at least partially forming the arrow receiving zone wherein a portion of the sheet surface forms the outer perimeter.

[0007] The US 2011074112 patent document makes known a target positioning system. The target positioning system with a rectangular flat table top member having downwardly disposed side walls and three primary legs to support the table top member. Two primary legs are hingedly attached to the left and right rear corners of the table top member. One primary leg is hingedly attached under the center front portion of the table top member. Each leg has a telescoping secondary leg member that is capable of being affixed to the to the primary leg member to adjust the height of the primary leg member. The table top member left and right side walls include slots for receiving a strap. The strap can be adjusted in length to hold a standard archery target cube. The flat table top member includes upwardly facing flange located at the rear edge of the table top to prevent the target block from being thrust backward during target practice.

[0008] The FR2712079 patent document makes known a device for determining the position of a group of projectiles, in particular arrows, on a target, intended for archery in particular. It essentially comprises at least one electronic camera mounted in a support frame surrounding a target, the optical axis of the lens of the camera being disposed radially with respect to the normal axis of the target and intersecting it at a point located in the immediate vicinity of the said target, the said camera being able to supply signals representative of at least two images, taken at different angles, of a group of at least two arrows sticking in the target, the said images being analyzed by electronic means which make it possible to determine the exact position of the arrows on the target.

[0009] The WO 8705688 patent document makes known a dart scorer is provided with eight receivers around a dartboard. A transmitter moves around the dartboard. As the transmitter reaches a position at which it is aligned with a dart and the receiver on the opposite side, a first imaginary line for the position of the dart is determined. Similarly, when the transmitter reaches position it is aligned with dart and the receiver and a second imaginary line for the position of the dart is determined. The actual location of the dart may then be calculated from the intersection of these two imaginary lines. If transmitters and receivers are provided for two or more planes, the angle of incidence of the dart can be determined for use in calibrating its actual location in the darts board.

[0010] The US 2005187036 patent document makes known an apparatus and method designed for the detection, location and velocity of impacts for sports game feedback on player accuracy. The methods, systems and apparatus for detecting sports object impact location detection and object velocity are provided. Furthermore integrated game systems for simulating sports for use as player and coaching aids are also provided.

[0011] Various technical solutions have been developed additionally to these solutions in relation to the archery, but no suitable solution is know for the accurate detection, evaluation of the scores, including their electronic processing and

accurate display. The experimental systems used so far tried to detect the scores mostly with the help of sensor installed in the board, but these sensors could survive only a couple of shots. Only the competition final can be broadcasted presently, and this is rather troublesome too.

[0012] According to our knowledge there is no operating system known presently, which could be suitable for accurate detection and displaying of scores in archery. There have been many attempts to establish such system, but all of them proved to be inadequate because of the poor accuracy. Experiments were made in China, England, Turkey and in many other countries, but no solution is know, which could be suitable for accurately detecting and displaying the real results, which could be used in practice.

[0013] The objective of creating the solution according to the invention was to establish a system, which is suitable for electronic detection and display of scores in archery, including the accurate determination of the position of the arrow shot into the target, in which the position is converted into electronic position data, and it displays, and in the given case stores and forwards the data.

[0014] When creating the solution according to the invention it was recognised that if the impact point of the target is determined with detectors moving in x-y directions, and the coordinates of the points are calculated from the determined position, and then these values are summarized with a data processing system, preferably with computer, and are displayed on a suitable unit, monitor or projector, then the set out objective can be reached.

[0015] The invention is a scoring system for archery, which is suitable in archery for detecting the scores in an electronic manner, including the evaluation and displaying of data obtained, and the system contains arrow catch, which is provided with detector unit that detects the impact of arrow and determines its position, and also contains a processing and evaluating unit which is in wired or in wireless connection, and a display unit. It is characterised by that, the detecting unit is established as the frame or in the frame of the arrow catch, and the detectors or distance meters used for determining the position of arrows in the target are mounted on the position detecting carriages that move in X-Y directions, the driving of which is made by one of the known methods along the X-Y coordinates linearly along respective straight lines, and preferably a step counter, encoder is used for accurately determining the position of the movement along the straight line, which gives the position on the basis of pulses counted in proportion to the movement.

[0016] In one preferred embodiement of the system according to invention a number of arrow catches are used, together with a number of associated detecting units, as well as one or more display units belonging to the detecting units are used.

[0017] In another preferred embodiement of the system according to invention the driving of position detecting carriages in X-Y direction is made by means of belt, rack and pinion or spiral shaft, and the linear guidance is ensured by long groove, or rod, or rail.

[0018] In a further preferred embodiement of the system according to invention the driving of position detecting carriages is made with common drive jointly with a single motor, or independently of each other, separately with two motors.

[0019] In a further preferred embodiement of the system according to invention the position detection applied in the detecting unit takes place on the basis of reflection, and/or with the principle of object reflection, and/or with distance measurement.

[0020] In a further preferred embodiement of the system according to invention the determination of the lateral position is made with the magnetic physical principle, or with stepping motor.

[0021] In a further preferred embodiement of the system according to invention the position data of one or more arrows already in the target are considered during the operation of the system as earlier local data for detecting a new position, and the detection and scanning of the new position takes place upon the impact of the new arrow.

[0022] In a further preferred embodiement of the system according to invention the mechanical and sound wave generated by the impact of the arrow in the arrow catch is detected by the sound and/or vibration detector, and the signal of this sound and/or vibration detector initiates the new position scanning.

[0023] In a further preferred embodiement of the system according to invention the detecting unit of the system is combined with position finding process based on the detection of sound and/or vibration, for which purpose sound and/or vibration detectors are installed at a number of points of the detecting unit, which provide additional information about the area where the last arrow has impacted the arrow catch, where preferably four sound and/or vibration detectors are used, and from the signal provided by them the time is determined that has elapsed from the impact until the sound or vibration reaches the sound and/or vibration detectors, and then distance data are calculated by means of triangulation method considering the known size of the target, which determine and improve the accuracy of the position of the last shot after comparing them to the data obtained with optical scanning.

[0024] In a further preferred embodiement of the system according to invention the time periods elapsed from the impact until the sound wave or vibration reaches the various sound and/or vibration detectors are used from among the signals obtained by the sound and/or vibration detectors about the sound and/or mechanical wave caused by the impact of the arrow, for improving the accuracy of determining the position, preferably the position of the arrows being in the covered zone.

[0025] In a further preferred embodiement of the system according to invention the sound and/or vibration detectors are installed in the detecting unit in symmetric or asymmetric way at the various points of the detecting unit.

[0026] In a further preferred embodiement of the system according to invention the process of positioning the target, evaluation of scores, determination of position and display are made as follows:

[0027] in the first step the equipment of the system are switched on, put into operation, then the target is placed on the arrow catches,

[0028] then target is centred, during the process of which the location and centre of the target is determined relative to the arrow catch, and this points gives the reference point that corresponds to a given physical point of the target detected and scanned electronically, in the given case to the centre of target,

[0029] the centre of the target is marked during the centering process with a spike by pushing the spike in the middle of the target, or by pointing an arrow to the centre

of the target, and then a reading process is initiated with the pushbutton located on the detecting unit, during which process this position is memorized by the system as a reference position, and this information is send by the detecting unit to the processing and evaluating unit as basic data,

[0030] in the next step the type of the target is selected on the processing and evaluating unit in order to determine the tape of target to which the shooting will be made,

[0031] this is followed by the shootings, the data evaluation and the displaying.

[0032] In a further preferred embodiement of the system according to invention the detecting head is mounted on the position detecting carriage contains a detector or distance meter, which is moved in one direction, and various methods are used for determining the distance, for instance infrared detector, laser or sound radar.

[0033] In a further preferred embodiement of the system according to invention the detecting head contains one or more, or in the given case three detectors or distance meters on the position detecting carriage, moved in one direction, and the two or more detectors are shifted relative to one another, therefore, they provide different signals about the inclined position of the arrow that has impacted in the arrow catch, which are converted to distance to determined the location of impact more accurately.

[0034] In a further preferred embodiement of the system according to invention the sound and/or vibration detector is used in the detecting unit for detecting the impact, which is in direct fixed connection or in indirect mechanical connection with the target catch.

[0035] The solution according to the invention is furthermore set forth by the attached figures:

[0036] FIG. **1** shows the general layout of the application of the system according to the invention.

[0037] FIG. **2** shows the general block diagram of the structure of the system according to the invention.

[0038] FIG. **3** shows the front view of the arrow catch, which is provided with detecting unit, in one of the cases determination of the position of the arrow, when the object reflection or mirror reflection position detection is used.

[0039] FIG. **4** shows the side view of the arrow catch, which is provided with the detecting unit according to FIG. **3**.

[0040] FIG. **5** show the front view of the arrow catch, which is provided with detecting unit, in another case of the possible methods of position finding, when the position detection is made with the measurement of distance.

[0041] FIG. **6** shows the front view of a possible actual embodiment of the arrow catch established with detecting unit, together with a possible embodiment of the movement in x-y direction.

[0042] FIG. **7** shows the general flow chart of the system operation.

[0043] FIG. **8** shows the flow chart of the process of determining the position with belt-rod method in case of a possible actual application.

[0044] FIG. **9** shows a possible mode of determining the position of arrows in the covered zone.

[0045] FIG. **10** show the theoretical layout of the position finding configuration combined with sound and/or vibration detection, with sound and/or vibration detectors placed symmetrically at the corners of detecting unit.

[0046] FIG. **11** shows the theoretical layout of positing finding method combined with generation of sound or vibration, where the vibration generators are installed in the detecting unit in an asymmetrical way.

[0047] FIG. **12** shows the embodiement of an optical detector with one head, as well as the error range of determining the inclination of the arrow.

[0048] FIG. **13** shows the embodiement of the optical detector with two heads, together with the mode of determining the inclination angle of the arrow.

[0049] FIG. **14** shows the embodiement of the optical detector with three heads.

[0050] FIG. **1** shows the general layout of the application of the system according to the invention. The figure shows the shooting position **8**, arrow catch **1**, detecting unit **3**, processing and evaluating unit **4** and the display unit **5**. The archer **7** aims and shoots the arrow **2** to the target **6**, which is placed on the arrow catch **1**, which is provided with the detecting unit **3** according to the invention. The figure shows the processing and evaluating unit **4**, which is a computer in this case, as well as the display unit **5**, which is a computer monitor in this case. The detection system attached to the arrow catch **1** is in connection with the processing and evaluating unit **4** through wired connection **29** or via antennas **9** without wires, in this case in RF link. In this case it is a radio link established with GSM, WIFI, or Bluetooth, or any simple radio link which is capable of simple data transmission.

[0051] After the archer **7** has shot the arrow **2** and the arrow **2** hits the arrow catch **1**, a sound and/or vibration detector **27** in the detector unit **3** detects this hit. A process of reading starts at this moment, during which the position of the arrow **2** is determined in the arrow catch **1** relative to the target **6**. The obtained data is transmitted by the detecting unit **3** to the processing and evaluating unit **4**, where they are evaluated, and the generated data are displayed on the display unit **5**. In the given case, the score is indicated in a virtual target **6** shown on the display unit **5**. The same process is repeated after every shot arrow **2** until the predetermined number of shots is reached. The distance between the target **6** and the archer **7** is much larger than the distance shown in FIG. **1**. The distance of target L can be 10-90 m depending on the rules of competition.

[0052] FIG. **2** shows the general block diagram of the structure of the system according to the invention. The block diagram of a complete system can be seen in FIG. **2**, where a detecting unit **3**, assembled with a number of arrow catches **1**, a central processing and evaluating unit **4**, and in the given case, one or more display units **5** are applied. During a competition, or when a broadcast is made about the competition, it is possible that the score data of the separate detecting unit **3** appear on the display unit **5** simultaneously, and it is also possible that the score data of more arrow catches **1** and the detecting unit **3** appear on the display unit **5** alternately. The arrow catches **1** and the detecting units **3** are connected with wired connection **29** to the processing and evaluating unit **4**, or they are preferably linked with wireless RF connection through antennas **9** because of the distance. The data memory **10** connected to it, and the Internet link **11** allows storing the obtained data, and sending the data online to a distant location. A number of similar systems can be interconnected with the help of this, therefore, it is possible to held and watch competitions simultaneously at different locations of the world.

[0053] FIG. **3** shows the front view of the arrow catch **1**, which is provided with detecting unit, in one of the cases determination of the position of the arrow **2**, when the object

reflection or mirror reflection position detection is used. In the FIG. **3** are shown the front view of the arrow catch **1** and the detecting unit **3** is shown with the target **6**. The figure indicates the movement direction of position detecting carriages **13**, **14**. As can be seen in the figure, detectors **22** mounted on the position detecting carriages **13**, **14**, working with the principle of object reflection or minor reflection in the given case, are moved on the side of the unit in vertical and horizontal X-Y directions, which determine the accurate x-y coordinates of the arrow **2** shot into the arrow catch **1** during their movement. The figure shows the covered zone **16** in Y direction and the covered zone **17** in X direction. The figure shows the location of point **18** Y **0**, point **20** X **0**, as well as the location of maximum position **19** Y and maximum position **21** X.

[0054] FIG. **4** shows the side view of the arrow catch **1**, which is provided with the detecting unit **3** according to FIG. **3**. The side view of the arrow catch and detecting unit **3** according to FIG. **3** can bee seen in FIG. **4**, together with the target **6** the arrow **2** and the position detecting carriages **13**, **14**. The movement direction of position detecting carriage **14** is indicated in the figure.

[0055] FIG. **5** show the front view of the arrow catch, which is provided with detecting unit, in another case of the possible methods of position finding, when the position detection is made with the measurement of distance. The movement directions of position detecting carriages **13**, **14** are indicated in the figure. As can be seen in the figure, detectors mounted on the position detecting carriages **13**, **14**, working with the principle of distance measurement, in this case with distance measurement lasers **30**, are moved along the side of the unit in vertical and horizontal X-Y directions, which determine the accurate x-y coordinates of the arrow **2** shot into the arrow catch **1** during their movement with distance measuring position detection. The figure shows the covered zone **16** in Y direction and the covered zone **17** in X direction. The figure shows the location of point **18** Y **0**, point **20** X **0**, as well as the location of maximum position **19** Y and maximum position **21** X.

[0056] The position of the arrow **2** is determined with distance measuring position detection in this case, where the distance meter **30** is preferably a laser, or distance measuring sound radar. Relative to the arrangement shown in FIGS. **3** and **4** this solution provides additional information enough to be able to measure the position of arrow **2** even when it is covered in one direction. An arrow **2** is said to be covered, if the given arrow **2** is covered by one or more arrows **2** in a coordinate direction. As a result, the distance cannot be determined in that direction with measurement working with the principle of reflection.

[0057] The arrangement shown in FIG. **5** provides the following data for the accurate determination of the position: The Y coordinate is given by the difference of distances SY**1** and SY**2** in case of the carriage moving in x direction, while the X coordinate is given by the difference of distances SX**1** and SX**2**. These data are available even when the arrow **2** is covered, therefore, the position of arrow **2** in the target **6** can be determined accurately.

[0058] Possible modes of position detection and movement that can be used with the principal arrangements shown in FIGS. **3**, **4** and **5**:

[0059] Based on reflection (FIGS. **3** and **4**): detecting the interruption of light beam coming from the reflecting or mirror surface at the opposite side, and determining the x-y coordinate from this accurately.

[0060] Based on reflection from an object (FIGS. **3** and **4**): The object reflection transducer gives a signal, when the light beam is reflected from an object, in this case from an arrow **2**. In case of this method, it is not necessary to establish reflecting surface at the side of arrow catch **1** opposite to the detector **22**.

[0061] With distance measurement (FIG. **5**): the distance is measured with the help of optical, ultrasound or radio-frequency beam directed to the opposite side, and the distance meter **30** gives a differential signal in proportion to the given distance difference, when the position of arrow **2** is detected where the arrow **2** is in the path of the detecting beam. The accurate position of the arrow **2** can be determined from this.

[0062] The linear driving of the position detecting carriages **13**, **14** holding the detectors **22** or the distance meter **30** along a straight line is possible with all the known driving methods, in this case with belt drive, or rack and pinion, spiral shaft, etc. The guidance is provided by a long groove or a bar. The accurate position of the movement along a straight line can be determined preferably with a step counter **15**, encoder, which determines the position on the basis of the pulses counted in proportion to the distance. The accuracy of the position depends on the resolution of the step counter **15**, encoder, therefore, on the number of steps used along the given distance. Considering the typical sizes of arrows **2** and targets **6**, a well valuable position is given by a resolution produced with about 30000-150000 units within 1 m, which corresponds to an accuracy of 0.07 mm approximately. The distance between the reference point **0** and the lateral maximum position must be know accurately for determining the position of the arrow **2**.

[0063] The determination of the x-y lateral position can also be made with the help of magnetic physical principle, when a coils emits a signal in proportion to the lateral movement, in which a magnetic bar induces a voltage. In this case this solution is more expensive than the simpler step counter **15**, encoder. The determination of position and the movement of the detector can also be made with a mechanism driven by stepping motors **23**, during which process the number of steps unambiguously determine the position. The position detecting carriages **13**, **14** can be moved independently, with two motors **23** separately, or with common drive gear using a single motor **23**.

[0064] FIG. **6** shows the front view of a possible actual embodiment of the arrow catch established with detecting unit, together with a possible embodiment of the movement in x-y direction. In this case, the detecting unit **3** is established as a frame around the arrow catch **1**. In this case, the position detecting carriages **13**, **14** are driven by a motor **23** and with linear movement **24**, with belt drive in the given case. Each position detecting carriage **13**, **14** is moved along a linear guide **25**, which is preferably a long groove, linear guiding rod or rail. The movement **24** with belt drive is ensured by wheels **26**. In this case, the position detection takes place with detectors **22** working with optical reflection principle, where optical reflection surfaces, preferably light reflecting elements **28**, in the given case for example minors or prisms opposite to the detecting place of the position detecting carriages **13**, **14**, which reflect the laser beam to the detectors **22**. The reflected light is interrupted where the arrow **2** hit the arrow catch **1**, and its XY position is handled by the system as

local position data. The detector **22** is preferably an electrical assembly, containing a device capable of emitting laser beam, e.g. laser diode, and a receiving device capable of detecting the laser beam, e.g. a photodiode, which in this case is capable of emitting and detecting modulated laser beam for detecting the position.

[0065] In the case shown in FIG. **6**, when one or more arrows **2** are already in the arrow catch **1**, then their position data are considered as earlier local data when evaluating the new position. The evaluation, scanning of the position of arrow **2** takes place, when the new arrow **2** impacts. Upon impacting in the arrow catch **1**, the arrow **2** creates sound and mechanical waves in the arrow catch **1**, that are detected by a sound and/or vibration detector **27**. The signal of this sound and/or vibration detector **27** initiates the scanning of new position. The mode of this scanning is shown in detail in FIGS. **10** and **11**.

[0066] FIG. **7** shows the general flow chart of the system operation. During the process are proceeded the positioning of target **6**, evaluation of the shot, determining and displaying the position.

[0067] In the first step, the equipment of the system are switched on, put into operation. Then the target **6** is mounted on the arrow catches **1**. This is made with known methods, in the given case with sticking, or with spikes designed for fastening the target **6**. Because of their sizes, these items do not disturb the position finding process. The centering of the target **6** takes place subsequently, during which the location of the target **6** and its centre is determined relative to the arrow catch **1**, and this point means the reference point, so that the electronically detected and scanned position corresponds to a given physical point of the target **6**, in the given case to the centre of the target **6**. It is important to note, that this centering operation necessary only for the circular targets **6**, in case of other targets (e.g. animal shaped ones), only centred (e.g. perforated) targets may be used, which can be placed only at a given position relative to the detecting unit **3**.

[0068] Process of centering: the centre of the target **6** is market with the centering spike, so that the spike is pushed in the centre, or by pointing an arrow to the centre of the target **6**, and then a reading process is initiated with the centering pushbutton on the detecting unit **3**, during which this position is memorized by the system as a reference point, and this basic information is sent by the detecting unit **3** to the processing and evaluating unit **4**.

[0069] The next step includes the selection of type of target **6** on the processing and evaluating unit **4**, i.e. the size and type of target **6** to which the shot is made. The centering operation and the selection of type of target **6** can be interchanged in the given case, the main requirement is that it should be done for sure before the shooting. Then shooting take place together with the data evaluation and displaying.

[0070] FIG. **8** shows the flow chart of the process of determining the position with belt-rod method in case of a possible actual application.

[0071] The first step is the shooting, as a result of which the impact of arrow **2** generates vibration and/or sound effect. Then the bi-directional position finding is initiated according to the principle and mode described above. In the basic case of this process, the motor **23** stands at position **0**, from where the scanning is started in X and Y direction. During scanning, the positions of the changes, occurring when the detection is made, are memorized by the system, then the final position is reached, which is the end of the reading process. Then the scanning returns to the basis position. The changes occurring at the detection is summarized by the detecting unit **3**, which sends them as coordinate data to the processing and evaluating unit **4**.

[0072] In the given case this is accompanied by the position finding by means of optical scanning based on vibration or sound, which helps in determining the position of arrows **2** in the covered zone.

[0073] While the data are summarized subsequently, the detector **22** sends the coordinate and time data to the processing and evaluating unit **4**, where the data are stored, evaluated, and the positions of arrows **2** are determined and displayed.

[0074] FIG. **9** shows a possible mode of determining the position of arrows in the covered zone. Let us call the first shot as basic shot BS. This basic shot BS is always visible in the board, because this is the first shot and the arrow **2** cannot be in covered zone, therefore, the optical scanning gives entirely accurate data. The propagation of sound or vibration takes place in circular shape in central direction after the shot. When the sound reaches the detector **22**, a time measurement is started, and the time coordinates are given when the sound or the vibration reaches the first, second, third detector **22**. These time data can be converted to distance data on the basis of the velocity of sound. Based on the temperature, the velocity of sound, as well as the propagation rate of the vibration can be determined very accurately, and the distances obtained this way can be determined with an accuracy of several tenths of a mm. These distance data refer to the basic shot BS. As its accurate position in the board is known, therefore it is easy to determine that location as a reference point.

[0075] The locations of the subsequent shots are determined in the board relative to this reference point. If any of the subsequent shots are in the covered zone, meaning that it is not clearly visible for the optical detector, then its position can still be determined from the data obtained by detecting the vibration or sound originating from the impact, and its position can be further corrected and improved in an optical way. The time coordinates are forwarded by the detector to the processor, where these are converted to distance data, and are assigned to the given shots, and are displayed.

[0076] FIG. **10** show the theoretical layout of the position finding configuration combined with sound and/or vibration detection, with sound and/or vibration detectors **27** placed symmetrically at the corners of detecting unit **3**. The position of arrow **2** of the first basic shooting BS is indicated in the figure, together with the position of arrow **2** shot subsequently. Sound and/or vibration detectors **27** are attached to it in the detector housing **12** at a number of points of the detecting unit **3**, in this case at the four corners of the detector **3**, which provides further information about the area where the last arrow **2** has hit the arrow catch **1**.

[0077] Preferably, four such sound and/or vibration detectors **27** can be used, and from the signals provided by them, the time periods t_0, t_1, t_2 t_3 elapsed from the impact until the sound wave SW or vibration reaches the sound and/or vibration detectors **27** can be determined. It is possible to calculate distance data r with triangulation method on the basis of the known size of the target **6**, which determine the position of the last impact in comparison with the data obtained from the optical scanning. Also, these could be regarded as auxiliary information, if the optical scanning does not give unambiguous or sufficient information for determining the position of arrow **2**.

[0078] There is a chance, when the sound and/or vibration detectors **27** are installed in symmetrical array, that the position of the arrow **2** impacting subsequently the middle of target **6** cannot be determined with sufficient accuracy, if several arrows **2** are already shot into the arrow catch **1**, because the time difference of the vibrations coming to the sound and/or vibration detectors **27** is very small, therefore, they do not give sufficient additional information.

[0079] FIG. **11** shows the theoretical layout of positing finding method combined with generation of sound or vibration, where the vibration generators are installed in the detecting unit in an asymmetrical way. As compared to the arrangement shown in FIG. **10**, there are more sound and/or vibration detectors **27** installed in the detecting unit **3** in an asymmetrical way relative to one another. The advantage of this arrangement is that the vibration reaches the various sound and/or vibration detectors **27** always at different $t_0, t_1, t_2, t_3, t_4, t_5$ time intervals, and it is assured therefore that the signals of some of the sound and/or vibration detectors **27** can be processed always. As can be seen in the figure, the time intervals t**2** and t**5** are very short, but three well measurable time internals, for example t**1**, t**3**, t**4** in this case are still available related to the starting time t**0** of the measurements for determining the position of arrow **2**, thanks to the newly installed sound and/or vibration detectors **27**. In this way, the position of arrow **2** can be determined with sufficient accuracy. The accuracy could be improved by increasing the number of sound and/or vibration detectors **27**.

[0080] FIG. **12** shows the embodiement of an optical detector with one head, as well as the error range of determining the inclination of the arrow. The method shown in the figure is one of the modes of scanning the position. This arrangement in this case contains a detector **22** mounted on a position detecting carriage **13**, **14** which is moved in one direction, working with optical principle of operation mentioned above, or with some other principle of operation. The detector **22** is moved along the linear guide **25** by the position detecting carriage **13**, **14**, in this case along a long groove or rod, or on a motor rail.

[0081] The drawback of using a single detector **22** or distance meter **30** is that only one detecting line SL exists, therefore, the determination of the position of inclined arrows **2** is not accurate enough. The error distance K, caused by the inclination angle of arrow **2**, is indicated in the figure, which influences the accuracy of determining the position. The arrangement shown in FIG. **12** can also be used, when a distance metering device, in this case a distance meter **30** laser is mounted on the position detecting carriages **13**, **14**, instead of the detectors **22** working with reflection or object reflection principle.

[0082] FIG. **13** shows the embodiement of the optical detector with two heads, together with the mode of determining the inclination angle of the arrow. With the use of triangulation method, this configuration allows the accurate determination of the impact point of an inclined arrow **2**. Two detectors **22** are mounted on the position detecting carriage **13**, **14** shifted relative to each other, so they provide different optical signals about the inclined position, which can be converted to distance data to calculate the point of impact. The distance a,b of the detecting lines SL are known relative to the arrow catch **1**, and distance c is obtained from the difference of the detecting position. In this way, the error distance K can be reduced, and the position data can be made more accurate.

[0083] The arrangement shown in FIG. **13** can also be used, when a distance metering device, in this case a distance metering **30** laser is mounted on the position detecting carriages **13**, **14**, instead of the detectors **22** working with reflection or object reflection principle.

[0084] FIG. **14** shows the embodiement of the optical detector with three heads. In this case the detectors **22** in the three heads are shifted relative to one another, which makes the determination of the position even more accurate. The arrangement shown in FIG. **14** can also be used, when a distance metering device is mounted on the position detecting carriages **13**, **14**, in this case a distance metering **30** laser is used instead of the detectors **22** working with reflection or object reflection principle.

[0085] The configuration of the solution according to the invention in case of a preferred embodiment is as follows:

[0086] Detecting target (to which the shot is made).

[0087] Display: processing and displaying unit, in the given case a computer, monitor or special purpose-made computer.

[0088] In the case of a preferred actual embodiment the detecting unit **3** is established as the frame or in the frame of the arrow catch **1**, and the detectors **22** or distance meters **30** used for determining the position of arrows **2** are moved linearly along a straight line with one of the known methods along the X-Y coordinates, in the given case with belt or rack and pinion, spiral shaft, etc. The guidance is ensured by a long groove, or rod or rail. Preferably, a step counter (encoder) **15** is used for accurately determining the position of the movement along the straight line, which gives the position on the basis of pulses counted in proportion to the movement.

[0089] The detectors **22** or distance meters **30** are mounted on the position detecting carriages **13**, **14**, the driving of which can be made separately with two motors **23**, or with common drive with one motor **23**. The position detection applied in the detector **3** could work with the principle of reflection and/or object reflection and/or with distance measurement. The lateral position can be determined with magnetic physical principle, or on the basis of steps when stepping motor **23** is applied. The method used for measuring the distance could be for example infrared detector, laser, sound radar.

[0090] The detector head contains one or two or more, in the given case three detectors **22** or distance meters **30**, which are moved in one direction. The two or more detectors **22** or distance meters **30** are shifted relative to one another, therefore, the various signals are given about the inclined alignment of the arrow that has hit the arrow catch **1**, which can be converted to distance for calculating the location of the hit accurately. For detecting the hit, the detector **3** contains acoustic and/or mechanical sound and/or vibration detector **27**, which are in direct fixed contact or in indirect mechanical contact with the arrow catch **1**.

[0091] Possible Concrete Applications:

[0092] A number of different versions can be produced according to the application.

[0093] Version I: One to One—Home Version

[0094] This contains a target detector and a display, which shows the result of a shot to the archer. This version could be used by one or more people consecutively.

[0095] The related requirements are as follows:

[0096] Can be used with target sizes 80-130 cm

[0097] Handling of 10 arrows

[0098] Reading speed of 3 sec

[0099] Accuracy of 0.5 mm
[0100] Online display
[0101] Works with own software only
[0102] To notebook, PC
[0103] Animal shaped targets may also be used
[0104] Online software updating via the Internet.
[0105] This could be the best selling system for home use by anyone.
[0106] Capabilities: analysis of dispersion, calibrating shot, preparing improvement or declining characteristic curves, 0.5 mm accuracy, etc.
[0107] Version II: More to One—Competition Version
[0108] This is capable of displaying the result of more targets, processed on a single display. The competitors shot simultaneously, and their results, together with the actual ranking, is shown continuously on the displays.
[0109] The related requirements are as follows:
[0110] Shall be able to handle 10 arrows
[0111] Reading speed of 1 sec
[0112] Accuracy of 0.2 mm
[0113] Spatial detection
[0114] Online database
[0115] Online display
[0116] Different kind of output interface
[0117] Own giant display
[0118] Capability of connecting it to various displays
[0119] Programmable interface (to other displays)
[0120] Can be used only with circular targets
[0121] Version III: More to More (e.g. Shooting Range Version)
[0122] This is the version that has the widest range of capabilities, particularly for use by professional and Olympic tournaments. It's capabilities: Evaluation and processing of the hits in real time with 0.2 mm accuracy.

Embodiement

[0123] a number of targets, can be connected with a number of displays
[0124] the result of others can also be seen on the own display, together with the actual ranking, etc.
[0125] water proof design
[0126] The related requirements are as follows:
[0127] Handling of 10 pieces arrows
[0128] Reading speed of 3 sec
[0129] Accuracy of 0.2 mm
[0130] Online display
[0131] Works with own software only
[0132] To notebook, PC
[0133] Modules designed for shooting-range version
[0134] Retracting system (a machine that brings in the arrow after is has been shot, and goes to the given distance upon pressing a pushbutton)
[0135] Stationary display unit with touch-screen
[0136] Check-in gate
[0137] Planned accessories to the score displays:
[0138] Target (with identification mark)
[0139] Distance meter unit
[0140] When placed in front of the boards, it measures the distance of the archer from the board. This module makes the system full.
[0141] Excludes the possibility of cheating.
[0142] Special arrow catches, with identification mark
[0143] Camera module, display of live image
[0144] Reflecting module, illuminating system.
[0145] The advantage of the system according to the invention is that it determined the location of the arrow with high accuracy with optical method without mechanical contact, and it also displays the locations. Sound and/or vibration detecting is used in the system for making the determination of the position more accurate.
[0146] With the system according to the invention, it is possible to displayed the score quickly, even within 1 sec, and the score reached by the archer can be shown at the score display. As a result, it is possible to evaluate the actual ranking of the arched in the competition after each shot.
[0147] The system according to the invention can also be used conveniently for TV broadcasting of archery competition, because it shows the scores immediately, and makes the scores visible to a wide range of viewers.

List of references:

1 arrow catch
2 arrow
3 detecting unit
4 processing and evaluating unit
5 display unit
6 target
7 archer
8 shooting stand
9 antenna
10 data storage
11 Internet
12 detector housing
13 position detecting carriage (y)
14 position detecting carriage (x)
15 step counter, encoder
16 covered zone (y)
17 covered zone (x)
18 Y 0 point
19 Y maximum position
20 X 0 point
21 X maximum position
22 detectors (optical)
23 motor (drive of carriage)
24 drive (linear)
25 guide (linear)
26 wheel
27 sound and/or vibration detector
28 light reflecting element
29 wired connection
30 distance meter

to time period	t4 time period
t1 time period	t5 time period
t2 time period	
t3 time period	
h distance	SX1 distance
SW sound wave	SX2 distance
BS basic shot	SY1 distance
r distance	SY2 distance

SL detecting line
K error distance
a distance
b distance
c distance
L target distance

1. Scoring system for archery, which is suitable in archery for detecting the scores in an electronic manner, including the evaluation and displaying of data obtained, and the system contains arrow catch (**1**), which is provided with detector unit (**3**) that detects the impact of arrow (**2**) and determines its position, and also contains a processing and evaluating unit (**4**) which is in wired or in wireless connection, and a display unit (**5**),

characterised by that,

the detecting unit (**3**) is established as the frame or in the frame of the arrow catch (**1**), and the detectors (**22**) or distance meters (**30**) used for determining the position of arrows (**2**) in the target (**6**) are mounted on the position detecting carriages (**13**, **14**) that move in X-Y directions, the driving of which is made by one of the known methods along the X-Y coordinates linearly along respective straight lines, and preferably a step counter, encoder (**15**) is used for accurately determining the position of the movement along the straight line, which gives the position on the basis of pulses counted in proportion to the movement.

2. System according to claim **1**, characterised by that, a number of arrow catches (**1**) are used, together with a number of associated detecting units (**3**), as well as one or more display units (**5**) belonging to the detecting units (**3**) are used.

3. System according to claim **1**, characterised by that, the driving of position detecting carriages (**13**, **14**) in X-Y direction is made by means of belt, rack and pinion or spiral shaft, and the linear guidance (**25**) is ensured by long groove, or rod, or rail.

4. System according to claim **1**, characterised by that, the driving of position detecting carriages (**13**, **14**) is made with common drive jointly with a single motor (**23**), or independently of each other, separately with two motors (**23**).

5. System according to claim **1**, characterised by that, the position detection applied in the detecting unit (**3**) takes place on the basis of reflection, and/or with the principle of object reflection, and/or with distance measurement.

6. System according to claim **1**, characterised by that, the determination of the lateral position is made with the magnetic physical principle, or with stepping motor (**23**).

7. System according to claim **1**, characterised by that, the position data of one or more arrows (**2**) already in the target (**1**) are considered during the operation of the system as earlier local data for detecting a new position, and the detection and scanning of the new position takes place upon the impact of the new arrow (**2**).

8. System according to claim **1**, characterised by that, the mechanical and sound wave generated by the impact of the arrow (**2**) in the arrow catch (**1**) is detected by the sound and/or vibration detector (**27**), and the signal of this sound and/or vibration detector (**27**) initiates the new position scanning.

9. System according claim **1**, characterised by that, the detecting unit (**3**) of the system is combined with position finding process based on the detection of sound and/or vibration, for which purpose sound and/or vibration detectors (**27**) are installed at a number of points of the detecting unit (**3**), which provide additional information about the area where the last arrow (**2**) has impacted the arrow catch (**1**), where preferably four sound and/or vibration detectors (**27**) are used, and from the signal provided by them the time is determined that has elapsed from the impact until the sound or vibration reaches the sound and/or vibration detectors (**27**), and then distance data are calculated by means of triangulation method considering the known size of the target (**6**), which determine and improve the accuracy of the position of the last shot after comparing them to the data obtained with optical scanning.

10. System according to the claim **9**, characterised by that, the time periods (t_0, t_1, t_2, t_3) elapsed from the impact until the sound wave (SW) or vibration reaches the various sound and/or vibration detectors (**27**) are used from among the signals obtained by the sound and/or vibration detectors (**27**) about the sound and/or mechanical wave caused by the impact of the arrow (**2**), for improving the accuracy of determining the position, preferably the position of the arrows (**2**) being in the covered zone.

11. System according to claim **10**, characterised by that, the sound and/or vibration detectors (**27**) are installed in the detecting unit (**3**) in symmetric or asymmetric way at the various points of the detecting unit (**3**).

12. System according to claim **1**, characterised by that, the process of positioning the target (**6**), evaluation of scores, determination of position and display are made as follows:

in the first step the equipment of the system are switched on, put into operation, then the target (**6**) is placed on the arrow catches (**1**),

then target (**6**) is centred, during the process of which the location and centre of the target (**6**) is determined relative to the arrow catch (**1**), and this points gives the reference point that corresponds to a given physical point of the target (**6**) detected and scanned electronically, in the given case to the centre of target (**6**),

the centre of the target (**6**) is marked during the centering process with a spike by pushing the spike in the middle of the target, or by pointing an arrow (**2**) to the centre of the target (**6**), and then a reading process is initiated with the pushbutton located on the detecting unit (**3**), during which process this position is memorized by the system as a reference position, and this information is send by the detecting unit (**3**) to the processing and evaluating unit (**4**) as basic data,

in the next step the type of the target (**6**) is selected on the processing and evaluating unit (**4**) in order to determine the tape of target (**6**) to which the shooting will be made,

this is followed by the shootings, the data evaluation and the displaying.

13. System according to claim **1**, characterised by that, the detecting head is mounted on the position detecting carriage (**13**, **14**) contains a detector (**22**) or distance meter (**30**), which is moved in one direction, and various methods are used for determining the distance, for instance infrared detector, laser or sound radar.

14. System according to claim **1**, characterised by that, the detecting head contains one or more, or in the given case three detectors (**22**) or distance meters (**30**) on the position detecting carriage (**13**, **14**), moved in one direction, and the two or more detectors (**22**) are shifted relative to one another, therefore, they provide different signals about the inclined position of the arrow (**2**) that has impacted in the arrow catch (**1**), which are converted to distance to determine the location of impact more accurately.

15. System according to claim **1**, characterised by that, the sound and/or vibration detector (**27**) is used in the detecting unit (**3**) for detecting the impact, which is in direct fixed connection or in indirect mechanical connection with the target catch (**1**).

* * * * *