US00D496166S1

(12) United States Design Patent

Namikawa

(10) Patent No.: US D496,166 S
(45) Date of Patent: ** Sep. 21, 2004

(54) **KIDS SEAT**

(75) Inventor: **Masao Namikawa**, Saitama (JP)

(73) Assignee: **Market Brains, Inc.**, Tokyo (JP)

(**) Term: **14 Years**

(21) Appl. No.: **29/196,370**

(22) Filed: **Dec. 29, 2003**

(51) **LOC (7) Cl.** **06-01**
(52) **U.S. Cl.** **D6/333**
(58) **Field of Search** D6/333–335, 368, D6/339, 350, 371–375, 500–502; 297/1, 3, 16.1, 118, 250.1, 283.1, 423.41, 440.1, 440.12–440.19, 440.23, 451.8

(56) **References Cited**

U.S. PATENT DOCUMENTS

D178,352 S * 7/1956 Free D6/333
2,776,700 A * 1/1957 Potter et al. 297/3
3,575,465 A * 4/1971 Dolby et al. 297/118
D230,784 S * 3/1974 Raymond D6/335
D276,098 S * 10/1984 Cone D6/333
D283,855 S * 5/1986 Kujawski D6/333
D300,992 S * 5/1989 Cleavenger D6/333
D384,214 S * 9/1997 Green D6/368

* cited by examiner

Primary Examiner—Mimosa De
(74) *Attorney, Agent, or Firm*—Horst M. Kasper

(57) **CLAIM**

The ornamental design for kids seat, as shown and described.

DESCRIPTION

FIG. **1** is a front view of kids seat, shown without holding device for ease of illustration
FIG. **2** is a rear view thereof;
FIG. **3** is a right view thereof;
FIG. **4** is a left view thereof;
FIG. **5** is a top view thereof;
FIG. **6** is a bottom view thereof;
FIG. **7** is a front top perspective view thereof;
FIG. **8** is a front bottom perspective view thereof, with holding device attached;
FIG. **9** is a front top perspective view of the frame thereof, shown separately for ease of illustration; and,
FIG. **10** is a front to perspective view of the seat shown separately for ease of illustration.

1 Claim, 5 Drawing Sheets

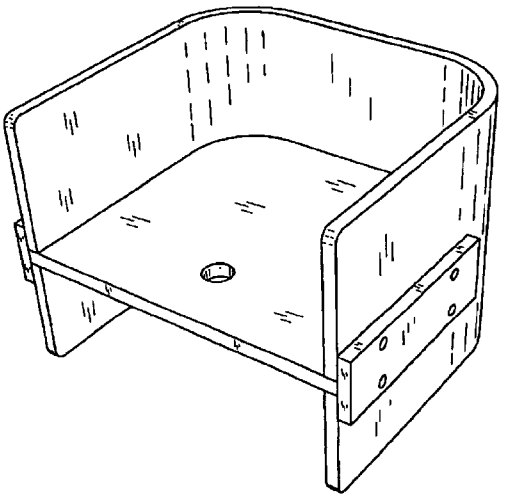

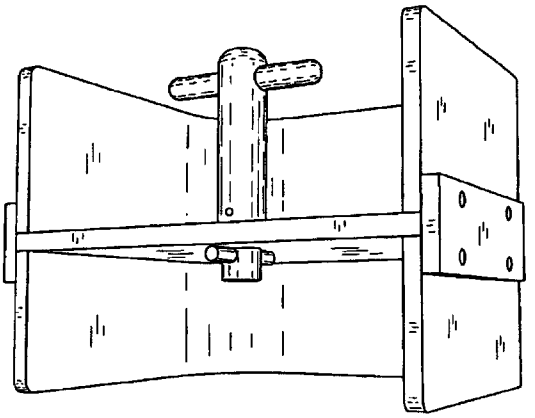

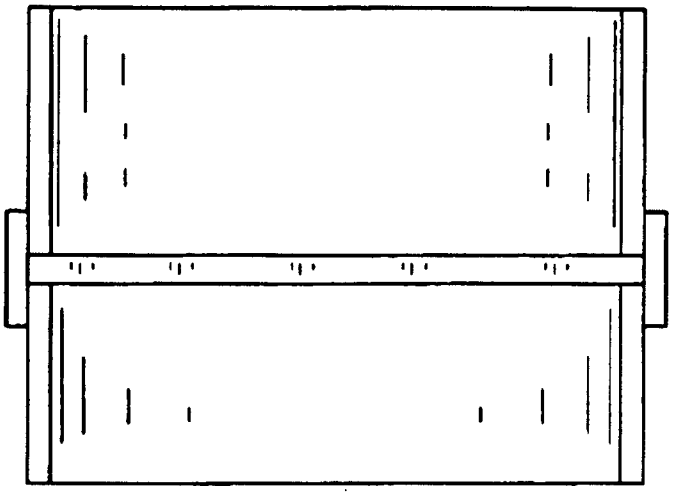

Fig. 1

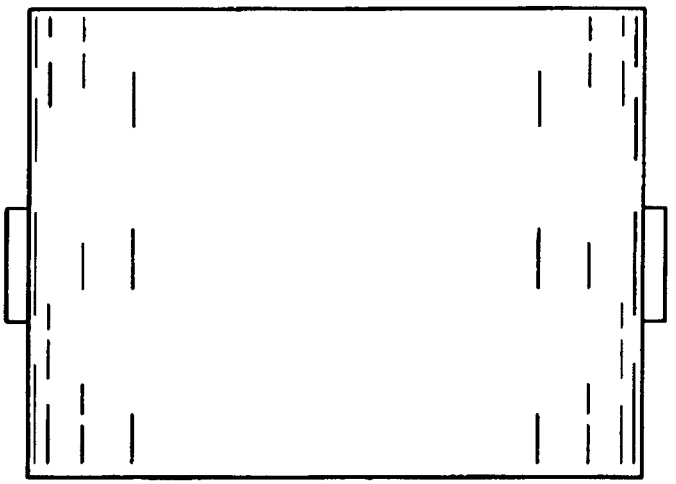

Fig. 2

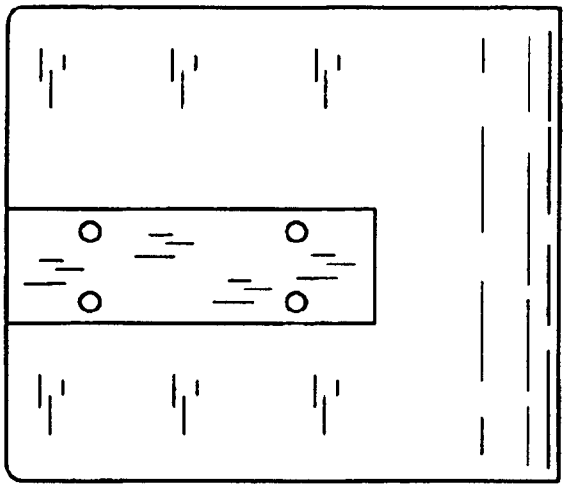

Fig. 3

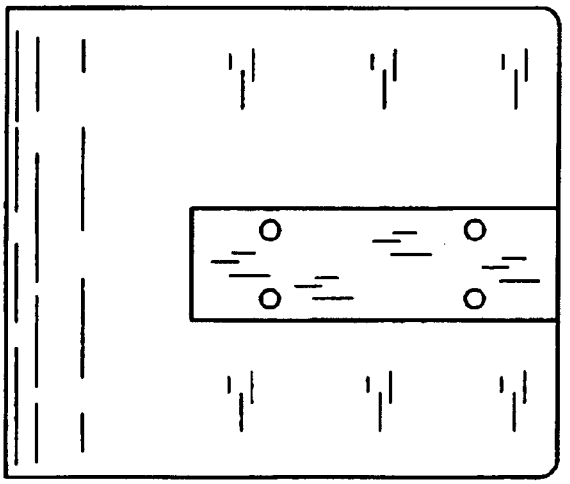

Fig. 4

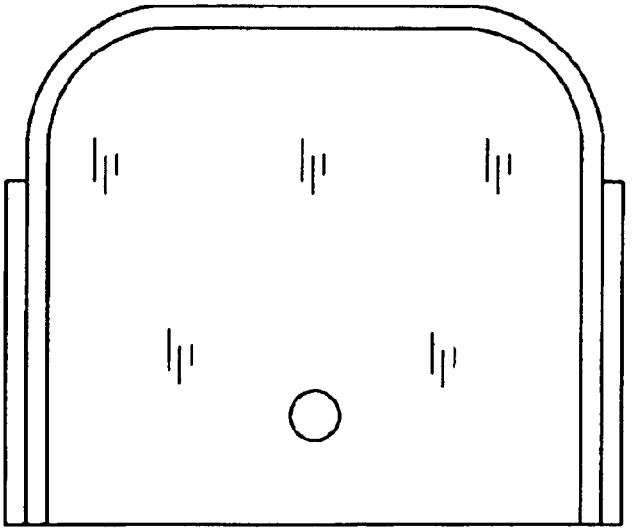

Fig. 5

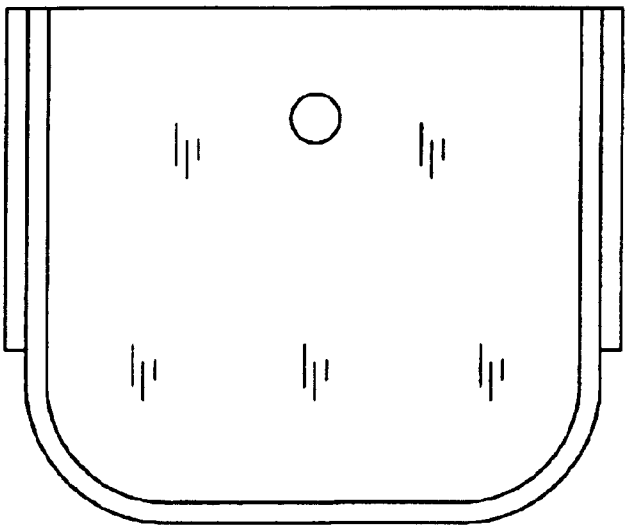

Fig. 6

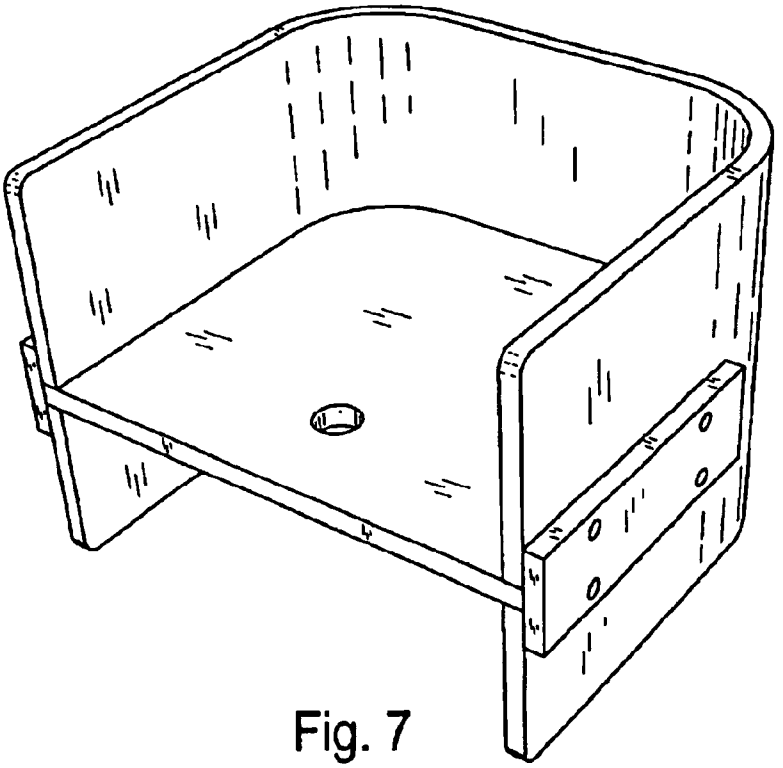

Fig. 7

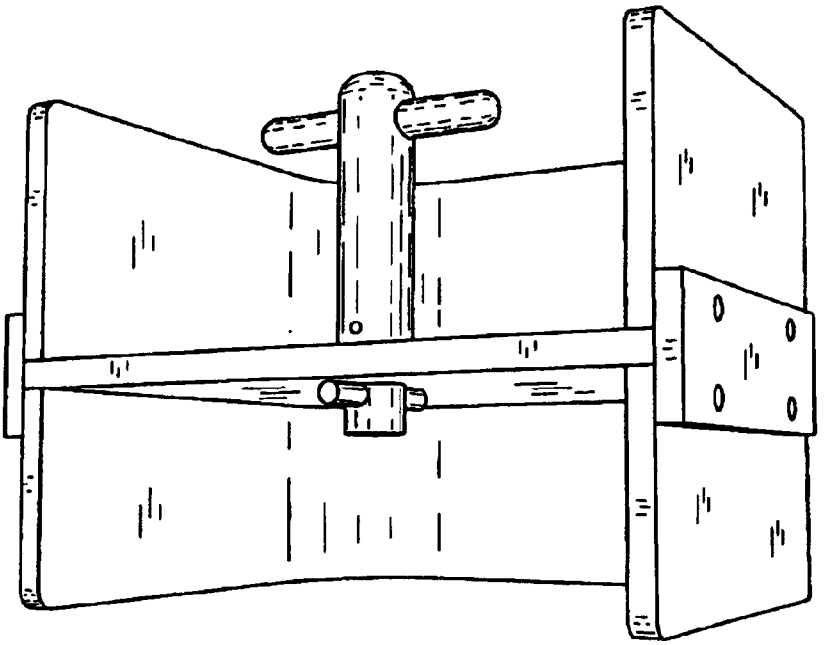

Fig. 8

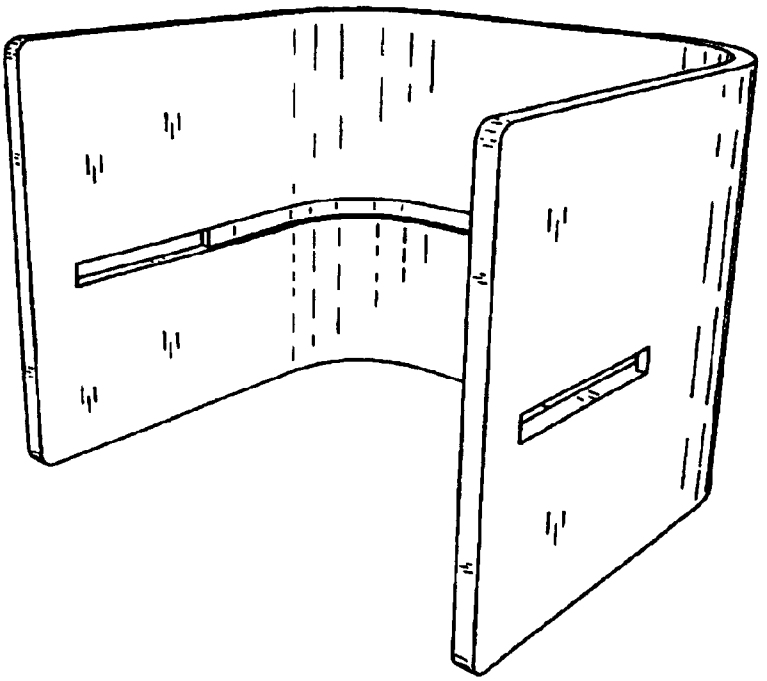

Fig. 9

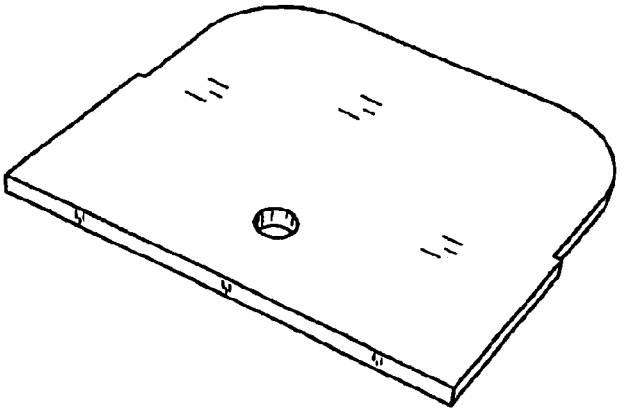

Fig. 10