United States Patent [19]

Uetrecht

[11] **3,916,750**

[45] ***Nov. 4, 1975**

[54] **ELECTRONIC ORGAN EMPLOYING TIME POSITION MULTIPLEXED SIGNALS**

[75] Inventor: **Dale M. Uetrecht**, Cincinnati, Ohio

[73] Assignee: **D. H. Baldwin Company**, Cincinnati, Ohio

[*] Notice: The portion of the term of this patent subsequent to July 17, 1990, has been disclaimed.

[22] Filed: **July 3, 1973**

[21] Appl. No.: **376,189**

Related U.S. Application Data

[62] Division of Ser. No. 223,629, Feb. 4, 1972, Pat. No. 3,746,773.

[52] **U.S. Cl.** **84/1.01**; 84/1.03; 84/1.17

[51] **Int. Cl.²** **G10H 1/00**

[58] **Field of Search** ..... 84/1.01, 1.02, 1.03, 1.1, 84/1.17, 1.28, DIG. 29, 115, 445

[56] **References Cited**

UNITED STATES PATENTS

3,594,487	7/1971	Jones, Jr.	84/1.1
3,610,799	10/1971	Watson	84/1.01
3,610,800	10/1971	Deutsch	84/1.01
3,647,929	3/1972	Milde, Jr.	84/1.01
3,674,907	7/1972	Derry	84/1.01
3,683,096	8/1972	Peterson et al.	84/1.03 X
3,696,201	10/1972	Arsem et al.	84/1.01
3,697,661	10/1972	Deutsch	84/1.01
3,743,755	7/1973	Watson	84/1.01
3,746,773	7/1973	Uetrecht	84/1.01
3,755,608	8/1973	Deutsch	84/1.01
3,763,364	10/1973	Deutsch et al.	84/1.03 X

Primary Examiner—Stephen J. Tomsky
Assistant Examiner—Stanley J. Witkowski
Attorney, Agent, or Firm—Hyman Hurvitz

[57] **ABSTRACT**

An electronic organ including a counter acting as a source of twelve repetitive time position multiplexed signals, each derived at a different time on a different lead, one time position being provided for each note nomenclature of the musical scale, time positioned pulses being gated through respective key switches having the same nomenclature as respective time position slots. All time positioned signals passed by any octave of key switches are combined on a single octave output lead assigned to that octave, and signals on octave output leads are selectively combined by coupler logic, output signals derivable from the coupler logic network being combined with pulse position signals derived directly from the source to provide coincident gate signals which cause tone source signals to be fed via tone color filters to an output load.

6 Claims, 6 Drawing Figures

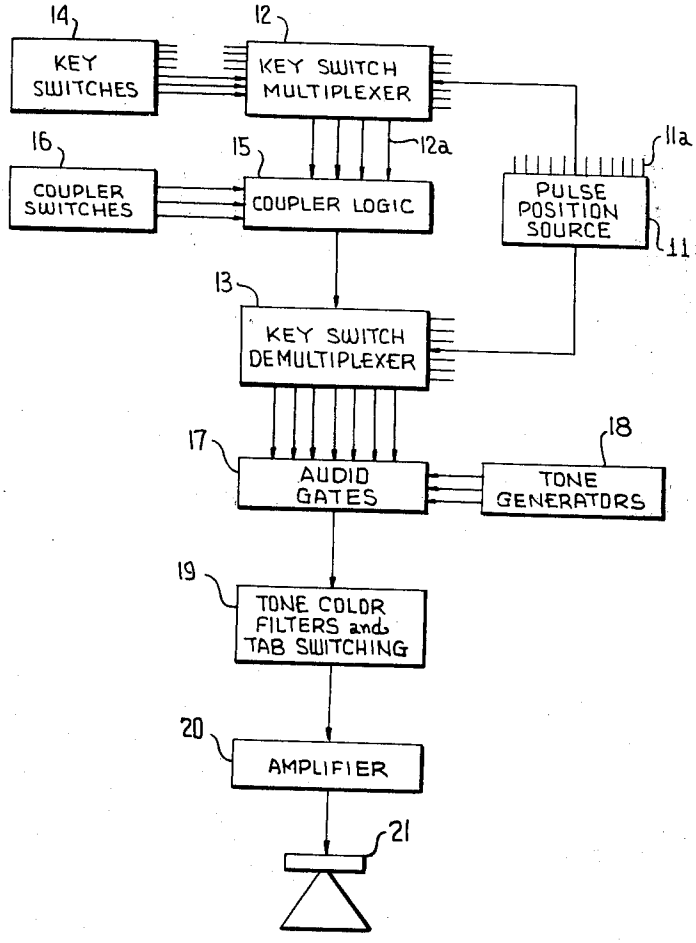

FIG. 1

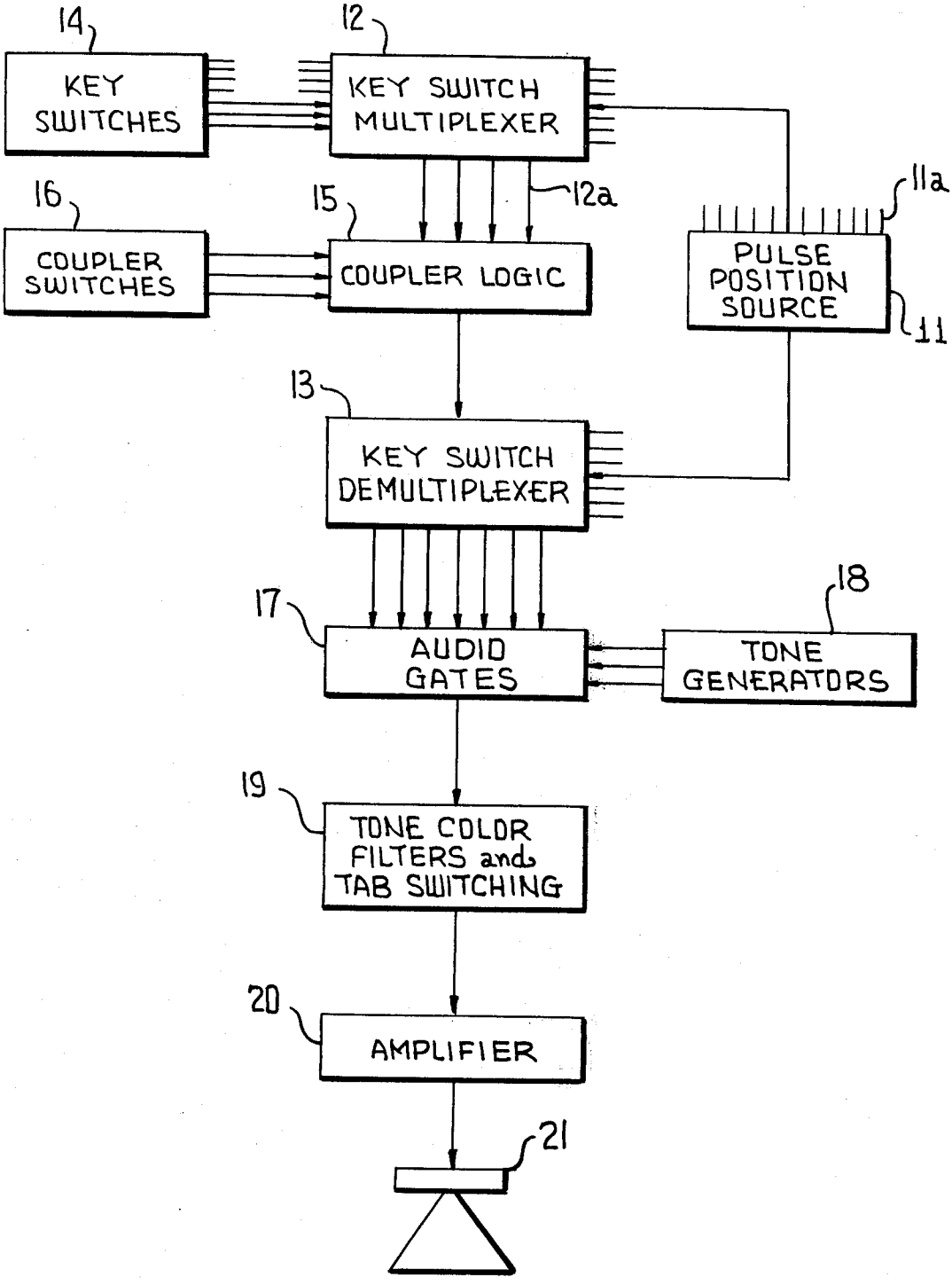
14
KEY SWITCHES
12
KEY SWITCH MULTIPLEXER
16
COUPLER SWITCHES
15
COUPLER LOGIC
12a
11a
PULSE POSITION SOURCE
11
13
KEY SWITCH DEMULTIPLEXER
17
AUDIO GATES
18
TONE GENERATORS
19
TONE COLOR FILTERS and TAB SWITCHING
20
AMPLIFIER
21

FIG. 2a

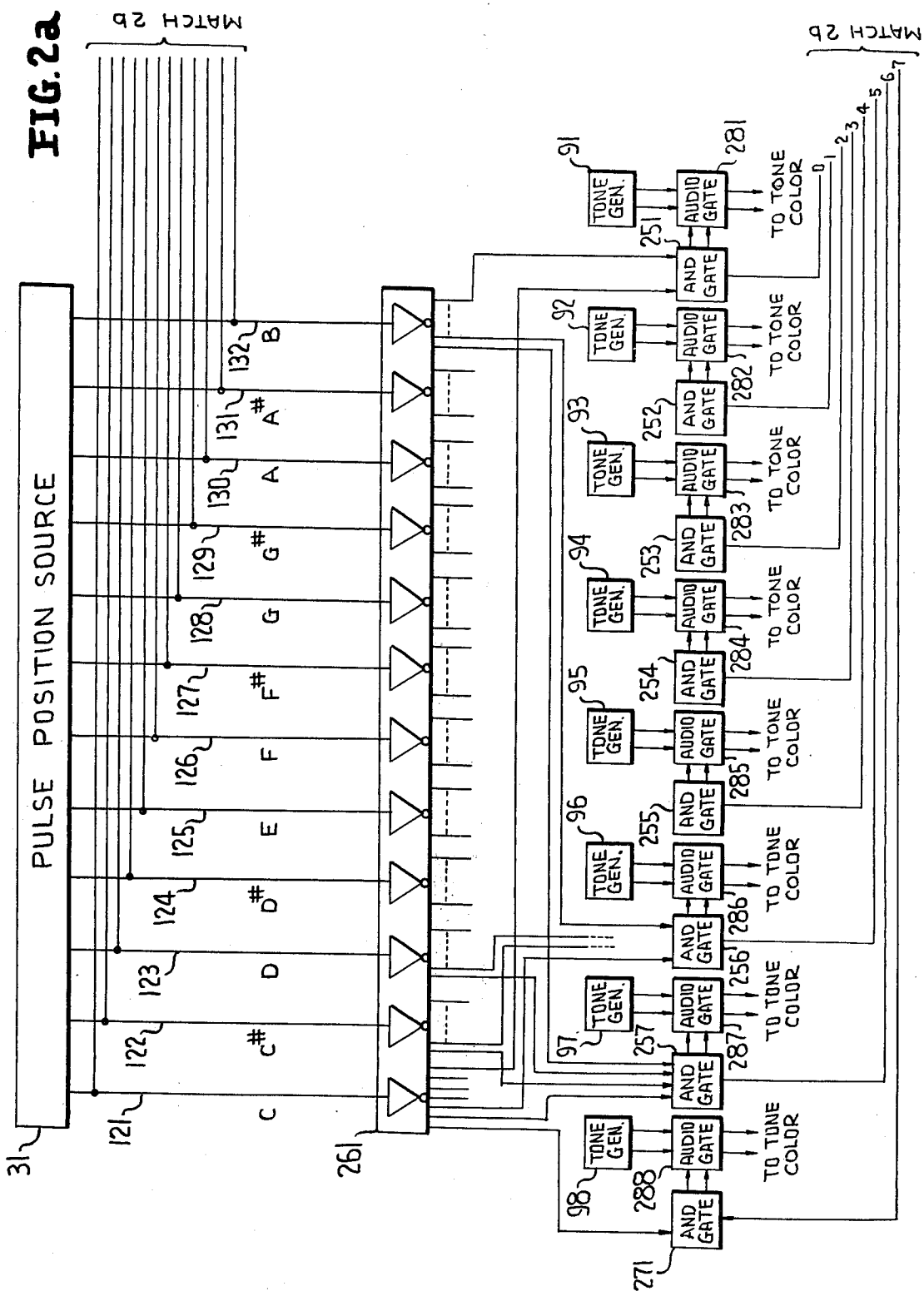
MATCH 2b
PULSE POSITION SOURCE
31
121
122
123
124
125
126
127
128
129
130
131
132
C
C#
D
D#
E
F
F#
G
G#
A
A#
B
261
TONE GEN.
AUDIO GATE
AND GATE
TO TONE COLOR
91
92
93
94
95
96
97
98
251
252
253
254
255
256
257
271
281
282
283
284
285
286
287
288
0
1
2
3
4
5
6
7

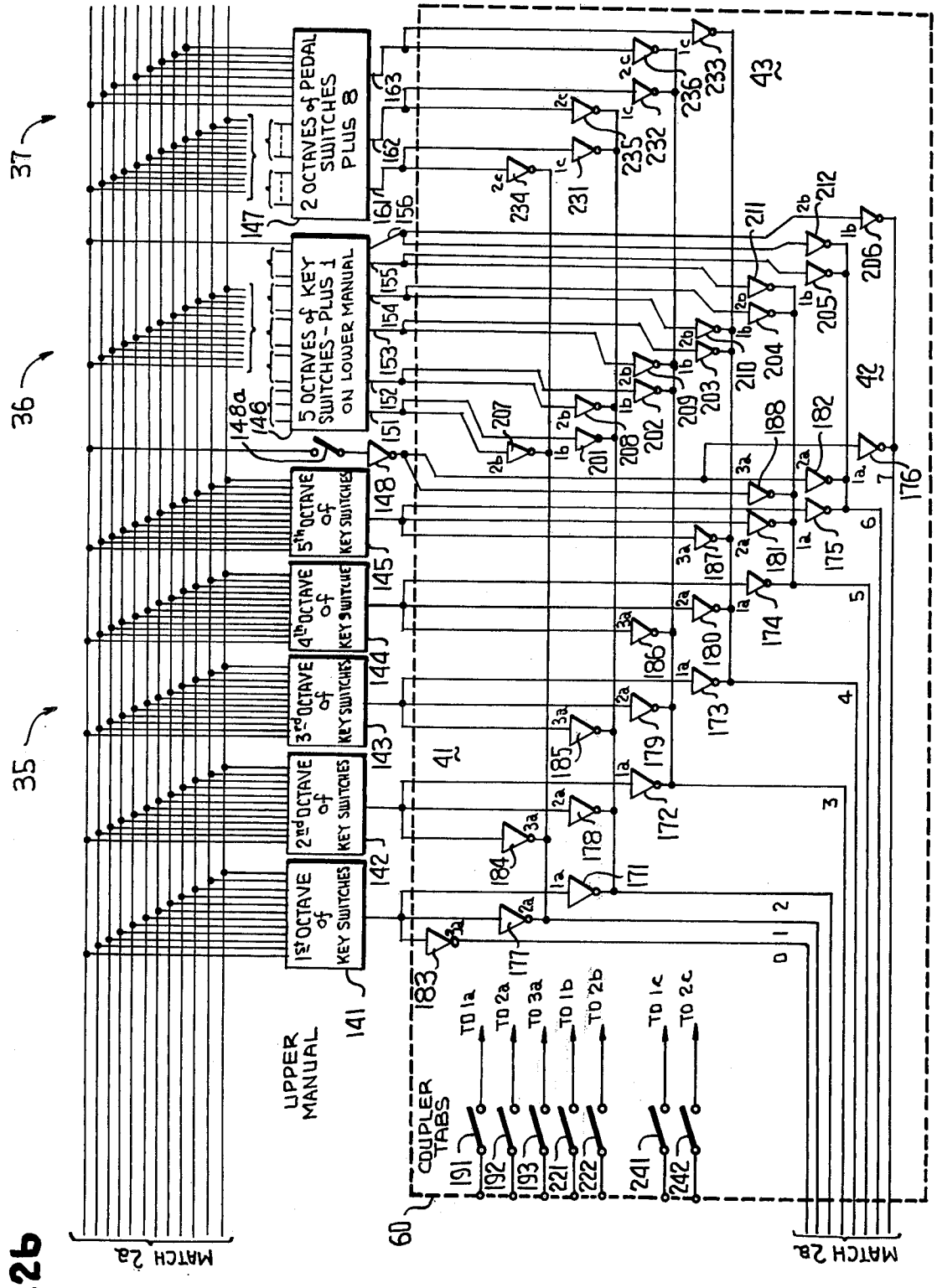
37
36
35
2 OCTAVES of PEDAL SWITCHES PLUS 8
5 OCTAVES of KEY SWITCHES - PLUS 1 ON LOWER MANUAL
5th OCTAVE of KEY SWITCHES
4th OCTAVE of KEY SWITCHES
3rd OCTAVE of KEY SWITCHES
2nd OCTAVE of KEY SWITCHES
1st OCTAVE of KEY SWITCHES
UPPER MANUAL
COUPLER TABS
TO 1a
TO 2a
TO 3a
TO 1b
TO 2b
TO 1c
TO 2c
MATCH 2a
MATCH 2b
41
42
43
60

FIG.2b

FIG. 3

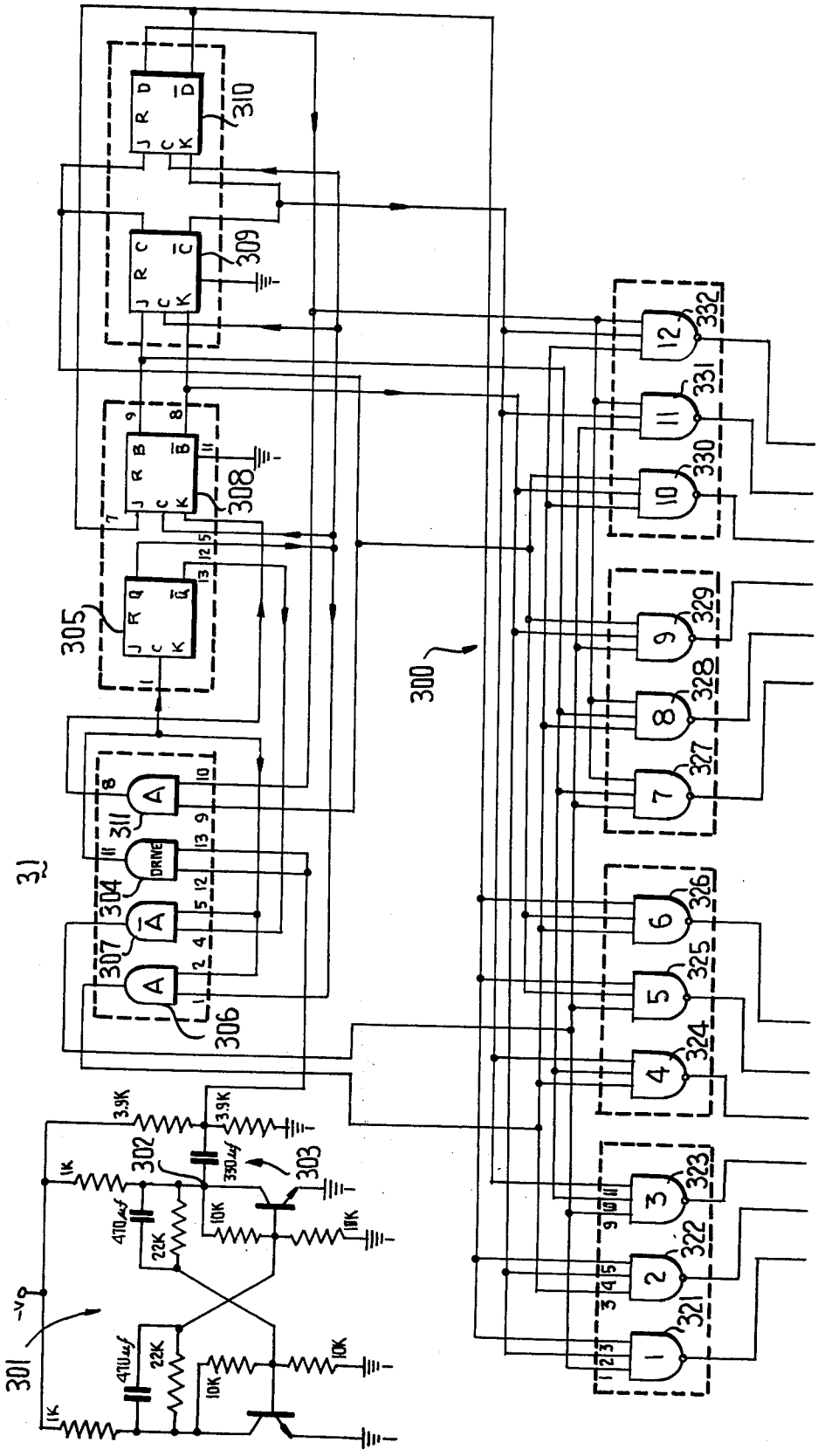

300
301
302
303
304
305
306
307
308
309
310
311
321
322
323
324
325
326
327
328
329
330
331
332
DRIVE
3.9K
1K
10K
22K
470μf
330μf
-V

FIG. 5

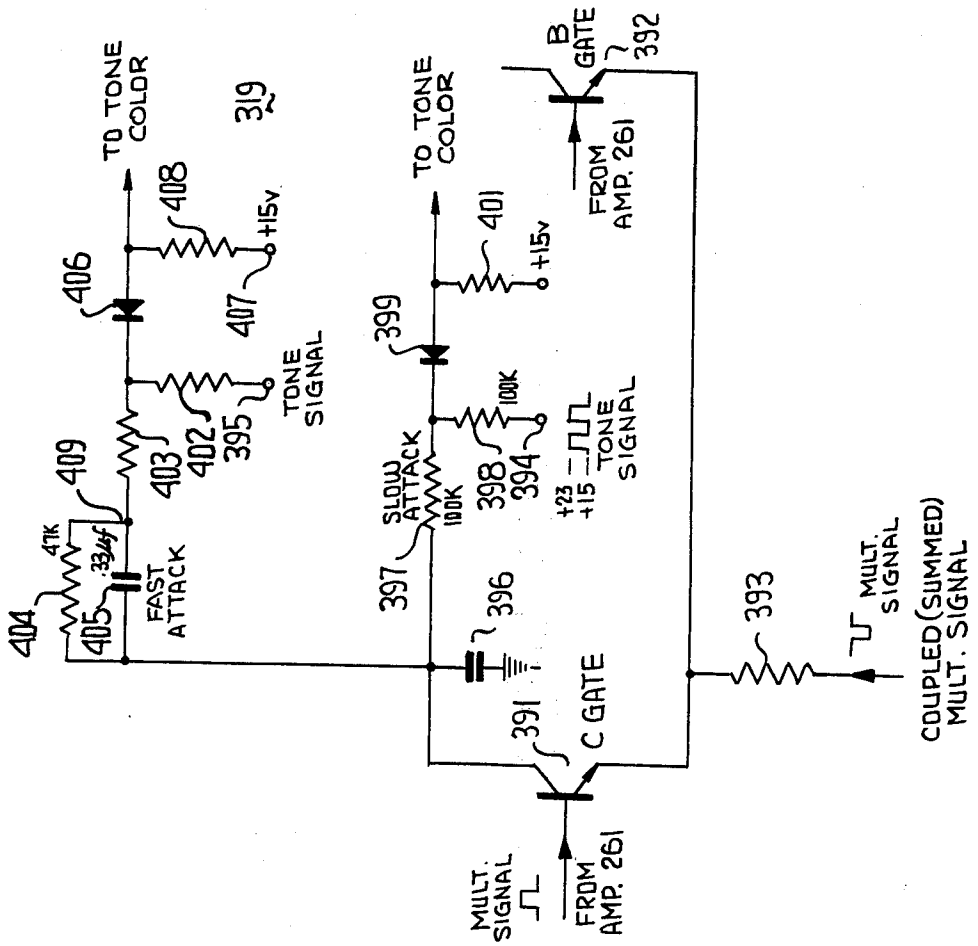
TO TONE COLOR
319
408
+15v
406
407
TONE SIGNAL
409
403
402
395
47K
.33μf
404
405
FAST ATTACK
TO TONE COLOR
401
+15v
399
100K
SLOW ATTACK 100K
398
394
+23 +15
TONE SIGNAL
397
396
B GATE
392
FROM AMP. 261
393
MULT. SIGNAL
COUPLED (SUMMED) MULT. SIGNAL
391
C GATE
MULT. SIGNAL
FROM AMP. 261

FIG. 4

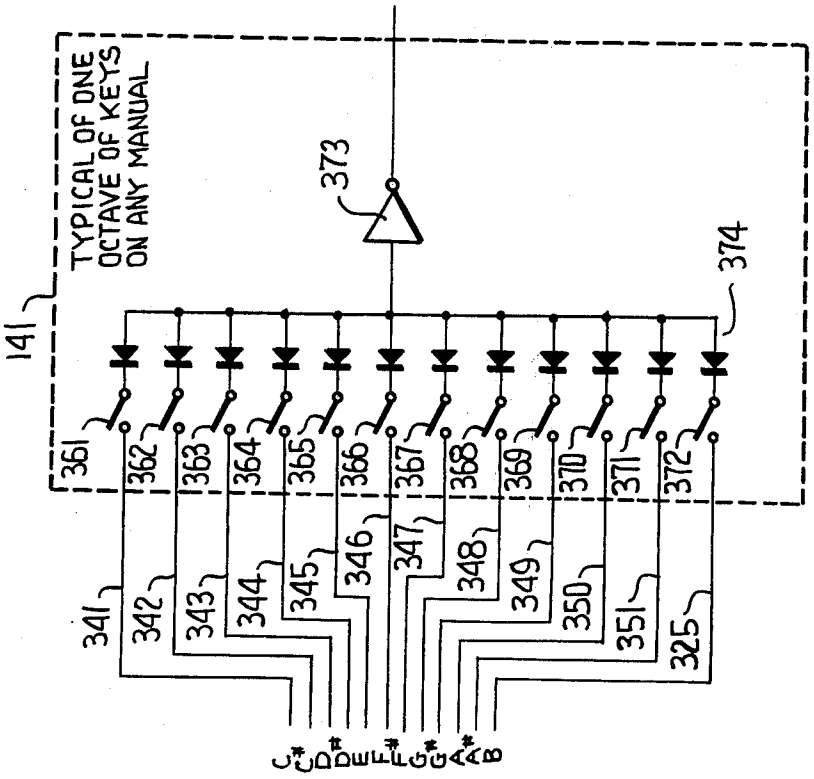
141
TYPICAL OF ONE OCTAVE OF KEYS ON ANY MANUAL
373
374
361
362
363
364
365
366
367
368
369
370
371
372
341
342
343
344
345
346
347
348
349
350
351
325

ELECTRONIC ORGAN EMPLOYING TIME POSITION MULTIPLEXED SIGNALS

CROSS-REFERENCE TO A RELATED APPLICATION

This application is a division of application Ser. No. 223,629, filed Feb. 4, 1972, and now U.S. Pat. No. 3,746,773.

BACKGROUND

Many prior art electronic organs have employed key switches, which control gates which serve to transfer tone signal from tone signal sources to an amplifier and loudspeaker. A lead is provided for each note of the organ, and since leads must be provided for connecting the tone sources of the organ to the gates, and the outputs of the gates to tone signal collection buses, an enormous footage of wire is employed in each organ, and a large number of soldered connections.

Any organ of some degree of sophistication requires octave couplers, which are essentially networks for causing to sound notes an octave above or below that called for by a given key, or notes otherwise related tonally to the called for note may be required to sound in place of the called for note.

It is an object of the present invention to transmit signals indicative of the fact that key switches are closed on a time division multiplex basis, in order to eliminate most of the wire leads of an organ, and thereby reduce its cost and complexity. Any system of multiplexing which is utilized in a sophisticated electronic organ must have provision for octave coupling. In accordance with the present invention twelve time positioned pulses are generated, each time position being allocated to a note nomenclature, and each separate octave of keys of the organ transmitting via a separate octave lead, the time positioned pulses which indicate which key nomenclatures are played within that octave.

It follows that for a 61 note keyboard, which is usual, six octave leads are required, each carrying one or more of 12 time positioned pulses representing the 12 semitones of that octave, and that provision must be made for the 61st note. The fact that all notes of a given nomenclature are represented by the same time slot of the time division multiplexed signals provides a practical opportunity for octave coupling, by transfer of timed pulses from one octave lead to another.

SUMMARY

A time division multiplex system for controlling the tone signal gates of an electronic organ, wherein to each octave of notes of the organ is allocated one lead, over which the twelve notes of that octave are transmitted as time position multiplexed note pulses, thereby reducing wiring costs in production of an organ, and transferring note pulses from one octave lead to another in order to achieve octave coupling.

DESCRIPTION OF THE DRAWINGS

FIG. **1** is a signal flow diagram of a system broadly according to the invention;

FIGS. **2***a* and **2***b* together comprise a circuit diagram, largely schematic of an organ including the features of FIG. **1**;

FIG. **3** is a block diagram of a pulse position source which applies time modulated signals to the multiplexer of FIGS. **1 – 2**;

FIG. **4** is a circuit diagram illustrating an octave of keying circuits; and

FIG. **5** is a schematic circuit diagram of demultiplex gates employed in the system of FIGS. **1 – 3**, inclusive

DETAILED DESCRIPTION

Referring to FIG. **1** of the accompanying drawings, **11** is a source of sequential pulses, for example a clock driven counter, which provides pulses on 12 output leads **11***a*, each lead being connected to one stage of the counter, so that the pulses on the spatial array of leads **11** occur on a time division basis, each lead having its own time slot. The leads **11***a* proceed to a multiplexer **12**, which selects the pulses of each group of 12 according to which key of an octave of keys is actuated and steers it to an output lead **12***a*, on a per octave basis, so that signals on any lead **12***a* can have any one of 12 positions representing note nomenclatures, the lead itself being identified with a specific octave.

The signals fed to multiplexer **12** from source **11** are selectively fed through the multiplexer in response to activation by the organist of key switches **14.** In a typical organ, having an upper and lower manual and a set of foot pedals, 154 key switches are provided. Each of the upper or swell manual and lower or grand manual includes five octaves of keys, each of which includes 12 semi-tones, in addition to a key for C of the octave immediately above or below the lowest or highest full octave. Key switches, in one embodiment of the invention, are provided for two full (12 semi-tone) pedal octaves, plus eight semi-tones for the octave adjacent the highest pedal full octave.

Key switches **14** are connected to multiplexer **12** in such a manner as to gate all of the notes for a particular octave in each manual to a different output lead of the multiplexer. Therefore, for the exemplary situation presented supra multiplexer **12** includes 15 output leads **12***a* on which are selectively derived pulse position signals in accordance with activation of the key switches **14.**

The fiften output leads of multiplexer **12** are fed to coupler logic network **15** which is also responsive to settings of coupler switches **16** made by the organist. Coupler switches **16** control interconnections between the 15 output leads of multiplexer **12** so that signals from different octaves can be coupled together. Coupler logic network **15** includes a relatively small number of output leads, one for each octave of each manual of the organ. In a typical organ, of the type described, there are 19 output leads of coupler logic network **15,** one for each of the 15 output leads of multiplexer **12,** one for the pedal super coupled octave, one for the lower manual super coupled octave, one for the upper manual super coupled octave, and one for the upper manual subcoupled octave. On each of the 19 output leads of coupler logic network **15,** there are selectively derived 12 pulse position signals indicative of the 12 semi-tones in each octave.

The output signals of coupler logic network **15** are combined with the pulse position signals derived from source **11** in decoder or demultiplexer **13.** Decoder **13** includes one coincidence gate for each tone of each of the 19 octave outputs of **15.** The coincidence gates are arranged by octaves so that all of the gates of one octave are responsive to the output lead of coupler logic

network 15 which is designated for that octave. Within each octave, a coincidence gate is provided for each semi-tone. Like semi-tone coincidence gates of the several octaves are driven in parallel by the same pulse position output signal of source 11, whereby at any time all of the gates having the same semi-tone nomenclature are enabled by an output signal of source 11. In response to time coincidence between the signal supplied to each gate of decoder 13 by source 11 and coupler logic network 15, a control signal is generated to enable a selected one of gates 17.

One or more of gates 17 is provided for each of the organ tones. Gates 17 include circuitry for converting (filtering) the relatively high frequency coincidence outputs of decoder 13 into d.c. gating voltages for controlling the passage of signals from generators 18 to the output of the gates. Signals from generators 18 are passed because the length of time a key is depressed relative to the frequency of pulses derived from source 11 is such that at least several hundred pulses are derived from decoder 13 for each activation of one of key switches 14. Each D.C. gating voltage controls a multiplicity of audio gates of 17, one for each footage to be tone colored. A typical manual would have 16′, 8′, 4′, 2 ⅔′ and 2′ available. Thus 5 audio signals would be gated from one D.C. gating voltage.

The signals derived from gates 17 are fed to conventional output circuitry including tone color filters and a tab switching network 19. Network 19 drives amplifier 20, which in turn feeds loudspeaker 21.

Reference is now made to FIGS. 2*a* and 2*b* of the drawings wherein is illustrated a block diagram of a portion of the circuitry associated with deriving the control signals for the swell output. In FIG. 2*a*, shift register 31 is illustrated as including 12 different output leads 121 – 132. One of leads 121 – 132 is provided for each of the semi-tones of an octave. The pulse position signals derived on leads 121 – 132 occur in timed sequence so that there is no overlap between any of the pulses and each has its own individual time slot that is unique to the time slot of all of the other pulses. To prevent the possibility of overlap between the pulses derived on leads 121 – 132, shift register 31 includes circuitry whereby the duty cycle of the pulse derived on each of the leads is approximately 10 per cent less than one part in 12. The pulses derived on leads 121 – 132 are assigned the 12 semi-tone note designations in accordance with:

TABLE I

Note Designation	Lead No.
C	121
C	122
D	123
D	124
E	125
F	126
F	127
G	128
G	129
A	130
A	131
B	132

The multiplexing pulses sequentially derived on leads 121–132 are supplied in parallel into five octaves of key switches for upper manual as key switches 35 and lower manual key switches 36, as well as for two full octaves of pedal switches 37. The five octaves of key switches for the upper manual are respectively indicated by reference numerals 141–145, while the switches for the lower manual key switches 36 and the pedal switches 37 are respectively indicated by reference numerals 146 and 147. To facilitate the description, separate leads to the different octaves of the lower manual and pedal switches or multiplexers are not illustrated.

The 12 signals applied to each octave of key switches are combined on a single output lead. Thereby, the signals derived on the output leads of each of the key switches has a time position indicative of the activated or depressed key in the octave. If more than one key in a particular octave is depressed, a plurality of time position pulses are derived at the output of each of the key switches, at times dependent upon the nomenclature of the depressed key. Since a key is invariably depressed for a time interval approaching or exceeding a significant portion of a second, a large number of pulses having the same relative time position is derived for each key activation.

In addition to the five octaves of key switches included in the upper and lower manuals, these manuals include a further key switch, indicated by reference numeral 148*a* for the upper manual, to provide the 61 keys in each manual. Key switch 148*a* and the corresponding key switch for the lower manual are connected to output lead 121 of shift register 31 so that a high C note can be derived. The high C note has the same time position as the C notes derived for the other octaves.

The five octaves of signals derived from key switches for multiplexer 146 are derived on leads 151–155. The single lead for the partial octave (for the note C) on the lower manual is derived on lead 156.

The two full octaves of notes derived from pedal switches of multiplexer 147, are derived on leads 161 and 162, while the partial, eight-note octave is derived on lead 163.

Consideration will now be given to the specific circuitry in coupler logic networks 41, 42 and 43. Coupler logic network 41 includes 18 selectively energized inverting amplifiers 171–188. Amplifiers 171–188 are arranged in three sets of six, whereby power is supplied to the six amplifiers of each set simultaneously. If no power is supplied to the amplifiers of a particular set, the amplifiers can be considered as open circuited switches. In response to power being supplied to the amplifiers, they function as unity gain, inverting amplifiers and can be considered as closed circuited switches. Power is supplied to amplifiers 171–188 through three normally open circuited coupler tab switches 191–193. In response to the organist closing any of the coupler tab switches 191–193 power is supplied to a selected six of the inverting amplifiers to activate them into a closed state. Amplifiers 171–188 are connected to be responsive to closure of coupler tab switches 191–193 so that there is coupling to the next adjacent higher footage octave of each of the octaves associated with switches 141–145 and 148 in response to closure of switch 191. There is coupling to the same octave in response to closure of switch 192, while there is coupling to the next adjacent lower footage octave in response to closure of switch 193. To these ends, power is supplied to amplifiers 171– 176 in response to closure of switch 191; power is supplied to amplifiers 177–182 in response to closure of switch 192; and power is supplied to amplifiers 183–188 in response to

closure of switch **193.**

The outputs of amplifiers for similarly designated octaves of coupler logic network **41** are connected to like output signals, in accordance with:

TABLE II

	Output Octave							
	0	1	2	3	4	5	6	7
Amplifier	183(3a)	177(2a)	171(1a)	172(1a)	173 (1a)	174(1a)	175(1a)	176(1a)
Amplifier		184(3a)	178(2a)	179(2a)	180(2a)	181(2a)	182(2a)	
Amplifier			185(3a)	186(3a)	187(3a)	188(3a)		

In Table II, the numbers in parenthesis indicate the unit order values for the activated coupler tab switches, the numbers running in ascending order from 0 to 7 indicate the eight output octaves of coupler logic network **41,** and the three digit numbers indicate the reference numerals for the amplifiers. Hence, e.g., Table II indicates that in response to coupler tab switch **193** being closed, the output signals derived from key switches **141–145** are fed to the output leads for the octaves from 0 to 5 via amplifiers **183–188.**

Coupler logic network **42** includes 12 amplifiers **201–212** arranged similarly to the coupling amplifiers of logic network **41.** Inverting amplifiers **201–212** are responsive to two additional coupler tab switches **221–222** which energize the amplifiers so that they selectively operate as open and closed circuited switches. Output leads of amplifiers **201–212** are connected to output leads corresponding with those of amplifiers **171–182.** The particular connections between these amplifiers and the output leads are given by:

TABLE III

	Output Octaves						
	1	2	3	4	5	6	7
Amplifier	207(2b)	201(1b)	202(1b)	203(1b)	204(1b)	205(1b)	206(1b)
Amplifier		208(2b)	209(2b)	210(2b)	211(2b)	212(2b)	

In Table III, the numbers in parenthesis indicate which amplifiers are responsive to coupler tab switches **221–222,** whereby those amplifiers responsive to switch **221** are indicated by (*1b*) and those responsive to switch **222** are indicated by (*2b*).

Coupler logic network **43** includes six selectively energized inverting amplifiers **231–236,** arranged in two sets of three. Power is selectively applied to the two sets of amplifiers in response to closure of coupler tab switches **241–242.** Amplifiers **231, 232** and **233** provide coupling to the higher footage outputs, and amplifiers **234–236** provide coupling to the outputs at the same footages as coupled through switches **147** to leads **161–163.** Connections between the output leads of amplifiers **231–236** and control of the amplifiers in response to activation of the selected ones of coupler tab switches **241–242** is in accordance with:

TABLE IV

	Output Octave			
	1	2	3	4
Amplifier	234(2c)	231(1c)	232(1c)	233(1c)
Amplifier		235(2c)	236(2c)	

In Table IV, the numbers in parenthesis designate which of coupler tab switches **241–242** is depressed, whereby (*1c*) designates activation of coupler switch **241** and (*2c*) designates coupler switch **242.**

A convenient packaging arrangement for the amplifiers included in coupling matrices **41–43** involves the use of multiple integrated circuit inverting amplifiers, each mounted on a single integrated chip and having a common power supply terminal. One particular, presently available integrated circuit chip includes six amplifiers thereby rendering it particularly adapted for use in conjunction with the present invention. These amplifiers have open collector outputs allowing them to sink current to the negative supply only if they are energized from the coupler tab and turned on from the time multiplexed key switch input. These open collector outputs can then be wired OR without using additional logic gates.

Demultiplexer or decoder **13,** FIG. **1,** is illustrated in FIG. **2a** as including seven sets of AND gates (coincidence gates) **251 – 257.** Each set of AND gates **251 – 257** includes 12 individual AND gates, one for each of the semi-tones of a complete octave. AND gate sets **251 – 257** are respectively responsive to the output signals derived for the seven lowest octaves (**0,1,2, 3,4,5** and **6**) derived by combining the outputs of coupler logic networks **41 – 43.** The individual gates within each set of AND gates **251 – 257** are responsive to the 12 pulse position signals derived on leads **121 – 132,** as coupled through driver amplifiers **261.** The AND gates in each of sets **251 – 257** respond to the signals fed thereto from driver amplifiers **261** and the combined output leads of coupler logic networks **41, 42** and **43** to derive d.c. gating signals that enable audio tones from tone generators **91 – 97** to be selectively passed through the sets of audio gates **281 – 287** to network **19,** FIG. **1.**

In addition to the seven sets of 12 AND gates, a further AND gate **271** is provided. AND gate **271** is responsive to the octave number 7 output derived by combining the signals of coupler logic networks **41 – 43** and the C note output signal by shift register **31** on lead **121.** AND gate **271** responds to coincidence between the octave number 7 input thereof and the signal on lead **121** to derive an enable signal that gates the output of tone generator **98** through audio gate **288** to circuit **19.**

Reference is now made to FIG. **3** of the drawing wherein there is illustrated an embodiment for an oscillator and shift register that derives the pulse position or 12 phase signal. Basically, the 12 phase source includes a free running transistorized multivibrator **301** which drives a plurality of cascaded bistable flip-flops, that in turn drive a logic network **300** having 12 output leads for deriving the 12 phase or pulse position signal.

Transistorized multivibrator **301** is of conventional design and derives a square wave voltage at terminal **302,** with a frequency, for example, of 240 KHz. The square wave voltage developed at terminal **302** is shaped into a series of positive and negative pulses, one of which is derived in response to each transition of the square wave by differentiator **303.** The negative going pulses derived by differentiator **303** are amplified by driver **304** which feeds toggle flip-flop **305** in parallel with input terminals of AND gates **306** and **307.** Flip-flop **305** includes a true output terminal (Q) which drives the other input terminal of AND gate **306** in parallel with clock input terminals (C) of J – K flip-flops **308 — 310.**

Flip-flops **308 – 310** are cascaded with each other so that they, in effect, form a three-stage counter, having a maximum count of eight. Connections between flip-flops **308-310** enable them to function as a divide-by-six ring counter responsive to the voltage developed at the Q output terminal of flip-flop **305.** Because of the toggle action of flip-flop **305,** the flip-flops **305** and **308–310** effectively form a divide-by-12 counter, or frequency divider for the 240 KHz output of multivibrator **301.** To provide feedback required to establish the divide-by-six count from the counter including flip-flops **308–310,** AND gate **311** is provided. AND gate **311** includes input terminals responsive to signals developed at true output terminals (C) and (D) of flip-flops **309–310** and develops an output signal that is supplied to the K input terminal of flip-flop **308,** the J input terminal of which is responsive to the complementary (D) output terminal of flip-flop **310.**

The square wave voltages developed at the true and complementary output terminals of flip-flops **305** and **308-310** are combined in logic network **300** to derive the 12 phase output signal of pulse position source **31.**

Logic circuit **300** for deriving the 12 phase signal, in addition to including AND gates **306** and **307,** respectively responsive to the signals developed at the true and complementary output terminals (Q and Q, respectively) of flip-flop **305** and the output of driver **304,** includes 12 three-input NAND gates **321—332.** Three-input NAND gates **321–332** respond to the output signals of gates **306** and **307** and signals developed at the true and complementary output terminals of flip-flops **308–310** to derive a 12 phase, pulse position signal, in such a manner that each pulse has a duty cycle of approximately 10 percent less than one part in 12. The signal derived at the output terminal of each NAND gate is in a nonoverlapping time position relative to the signal derived at each of the other NAND gates, and each of the signals is equispaced from adjacent signals.

The connections between gates **306** and **307** and the output terminals of flip-flops **308–310** and input terminals of NAND gates **321–332** are given by:

TABLE V

NAND GATE	INPUT SIGNALS
321	ABD
322	ABD
323	ABC
324	ABC
325	ACD
326	ACD
327	ABD
328	ABD
329	ABC
330	ABC
331	ACD
332	ACD

In Table V, the outputs of gates **306** and **307** are respectively denominated as A and A; the signals derived at the true output terminals of flip-flops **308, 309** and **310** are respectively denominated as B, C and D; and the signals derived at the complementary output terminals of flip-flops **308, 309** and **310** are respectively denominated as B, C and D.

To positively prevent overlap between the signals derived at the output terminals of NAND gates **321–332** and thereby enable the duty cycle of each output of the several NAND gates to be approximately 10 percent less than one part in twelve, each of the NAND gates is responsive to a pulsating output of one of gates **306** and **307,** as indicated in Table V by the inclusion of an A or A input signal to each of the NAND gates.

Reference is now made to FIG. **4** of the drawings wherein is illustrated a preferred embodiment of a typical octave of key switches, such as the first octave **41** of upper manual key switches **35.** The octave of key switches includes 12 input leads, one for each semitone of an octave and each responsive to a different one of the signals on leads **121–132,** as derived from NAND gates **321–332.** Each of leads **341–352** is connected through a separate key switch **361–372** to the input terminal of inverting amplifier **373.** One of the key switches **361–372** is provided for each of the keys of the octave being considered. Only one switch is provided for each of the keys, regardless of the tab coupling which might be desired for a particular key because of the inclusion of matrices **41–43.**

To prevent sneak currents, each of key switches **361–372** is connected in series with a different one of diodes **374,** biased in such a manner as to pass the negative going multiplexing signals supplied to leads **341–352** by NAND gates **321–332.** Because the multiplexing signals are supplied to leads **341–352** in different time positions, the waveform developed on the single output lead of amplifier **373,** which is responsive to signals supplied to all of leads **341–352,** is, in effect, time position modulated by the depression of key switches **361–372.**

In FIG. **5** of the drawings is illustrated a portion of the circuitry included within one of the groups of 12 AND gates, such as group or set **257** of AND gates. In FIG. **5,** complete circuitry is given for the C gate included in group **257,** while fragmentary circuitry is given for the B gate.

The C gate includes NPN transistor **391,** having a base electrode responsive to a positive going multiplexing pulse derived by the driver inverting amplifier **261,** responsive to the signal on lead **121,** while the B gate comprises NPN transistor **392** having a base electrode responsive to the multiplexing pulse derived by the driver, inverting amplifier **261** responsive to the signal on lead **132.** The emitters of transistors **391** and **392** have a common connection to 1000, ohm resistor **393** that is responsive to a negative going pulse derived by the Number 6 output lead of a matrix comprising networks **41–43.** The emitter collector path of transistor **391** is biased to a conducting state with a duty cycle of ten percent less than one part in 12, the same duty

cycle as the multiplexing pulses, in response to the positive and negative multiplexing pulses applied to its base and emitter electrodes. The 20 KHz, low duty cycle activation of the emitter collector path of transistor **391** is converted into a d.c. gating potential for tone generator sources connected to terminals **394** and **395** by connecting a relatively large, 0.33 microfarad capacitor **396** between the collector of transistor **391** and ground. Capacitor **396** serves as a bias for slow attack and fast attack gating circuits for the tone signals supplied to terminals **394** and **395.**

The slow attack circuit for the tone supplied to terminal **394** includes a resistive voltage divider comprising two 100 kilohm resistors **397** and **398,** the junction of which is connected to the cathode of diode **399,** having an anode that is biased through resistor **401.** The tone source at terminal **394** is connected to the other terminal of resistor **398** and is selectively coupled through diode **399** to tone color circuits **319.** The tone signal supplied to terminal **394** is a square wave voltage having variations between 15 volts and +23 volts, voltages which enable selective coupling through the anode cathode path of biased diode **399.**

If there is no time coincidence between the positive and negative pulses supplied to the base and emitter of transistor **391,** the square wave voltage at terminal **394** alternately charges and discharges capacitor **396** between a pair of voltage levels, both of which are sufficiently high to maintain diode **399** in a back biased condition. In response to transistor **391** being forward biased at 20 KHz rate with a low duty cycle of approximately one part in 12, the charge on capacitor **396** is reduced, with a resulting decrease in the voltage across the capacitor electrodes. In response to the reduced voltage across the electrodes of capacitor **396,** the d.c. voltage level at the cathode of diode **399** is reduced sufficiently to enable the square wave tone signal at terminal **394** to be passed through diode **399** to tone color circuit **319.**

To provide fast attack in response to activation of transistor **391** into a conducting state, the tone signal at terminal **395** is selectively coupled to the collector of transistor **391** via resistors **402** and **403,** which are connected in series with the parallel combination of resistor **404** and capacitor **405.** A junction between resistors **402** and **403** is connected to the cathode of diode **406,** the anode of which is connected to a +15 volt d.c. biasing source at terminal **407** via resistor **408.** The voltage of the tone source connected to terminal **395** has a different frequency than the tone source connected to terminal **394** but varies between +15 volts and +23 volts so that diode **406** functions in a similar manner to diode **399.** The time required for the source connected to terminal **395** to be coupled through diode **406** is considerably less than that required for the source connected to terminal **394** to be coupled through diode **399** because of the inclusion of capacitor **405** in the circuit between terminal **395** and the collector of transistor **391.** Typically, the time constant of the fast attack circuit is 20 milliseconds, a result achieved by selecting the values of resistors **403** and **404** to be 47 kilohms, the resistance of resistor **402** to be 100 kilohms, and the value of capacitance **405** to be 0.33 microfarads.

In general more than one audio gate would be connected to the slow and fast attack bias. Only one each are shown for simplicity. For example, if three sets of gates are connected to the collector of transistor **391** and three sets of gates are connected to terminal **409,** capacitors **396** and **405** would be increased to one microfarad and resistors **393** and **404** would be reduced to 330 ohms and 15 kilohms respectively. This scaling would maintain the same time constant or attack rate as in the exemplary case.

In this general case, generator tones at 16′, 8′, 4′, 2 ⅔′, 2′, and 1′ **can be keyed on responsive to coupler gates** 175, 182, 205 **and** 212. **The lower footages** (16′, 8′ and 4′) on the slow attack and the higher footages (2 ⅔′, 2′, and 1′) on the fast attack.

It is to be understood that similar circuits are connected in the collector circuit of transistor **392** and are selectively activated in response to simultaneous application of positive and negative multiplexing pulses to the base and emitter thereof. Simultaneous application of the multiplexing pulses to the base and emitter of transistor **392** results in passing B tones from tone generator sources connected in fast and slow attack circuits in the collector thereof in the manner described with regard to the slow and fast attack circuits of transistor **391.**

What is claimed is:

1. In a multiplex organ system, a key switch for each note of a multi-octave manual, means for converting actuated ones of the keys of each octave of said manual separately into only 12 pulse codings in concurrent octaval note frames which occur in common for the separate octaves, and means for converting the codings of said pulses to tones of said organ.

2. The combination according to claim **1,** wherein is included means for converting the codings of pulses in one note frame pertaining to one octave of said organ to tones of a different octave of said organ.

3. An electronic multi-octave organ, comprising a multi-octave array of key switches, a source of 12 coded pulses, each of said pulses occupying a predetermined time slot corresponding with a note nomenclature on a time division multiplex basis, a plurality of channels corresponding respectively with different octaves of said organ, means responsive to selective actuations of said key switches for selecting said coded pulses for transmission in said channels, an array of tone signal sources, a load, and means responsive to the pulses selected for transmission in said channels for concurrently applying to said load tone signals corresponding selectively with different footages of said organ.

4. An electric organ, comprising an array of key switches, a source of 12 sequential pulses each occupying a predetermined time slot on a time division multiplex basis and each time slot corresponding with all keys of a given nomenclature, a plurality of leads each corresponding with a different octave of keys of said organ, means responsive to selective actuation of said key switches for selecting said pulses for transmission on said leads to convey the selected pulses according to the octave of each actuated key and its note nomenclature, an array of tone signal sources, a load circuit, and means responsive to said pulses for applying to said load circuit tone signals of pitch according to the time positions of said pulses and the leads on which said pulses occur.

5. The combination according to claim **4,** wherein is included means for transferring pulses from one of said channels to another one of said channels at will.

6. In an electronic organ having plural octaves of keys, means for converting notes of a first octave of

said organ into time positions of first pulses occupying those of 12 time positions corresponding with actuated ones of the keys of said first octave, means for converting notes of a second octave of said organ into time positions of further pulses occupying those of said 12 time positions corresponding with actuated ones of keys of said second octave, a sequence of tone signal sources, and means for selectively applying said groups of pulses to control said tone signal sources to provide tone signals corresponding with said actuated ones of said keys.

* * * * *