United States Patent

[11] 3,618,687

[72] Inventors **Melvin H. Ripple; Robert F. Dyer; Brandt F. Ziegler; Christian D. Berger, all of North Canton, Ohio**

[21] Appl. No. **838,302**
[22] Filed **July 1, 1969**
[45] Patented **Nov. 9, 1971**

[73] Assignee **The Hoover Company North Canton, Ohio**

---

[54] **POWER PROPELLED SUCTION CLEANER**
11 Claims, 19 Drawing Figs.

[52] **U.S. Cl.** ..... **180/19 H,** 15/340, 15/410, 74/502, 74/503, 192/48.9, 192/48.91, 192/49, 287/53 R
[51] **Int. Cl.** **B62d 51/04**
[50] **Field of Search** ..... 180/19 R, 19 S, 19 H; 15/340, 410, 411; 287/53 R, 53 H; 74/502, 503; 192/48.1, 48.9, 48.91, 49

[56] **References Cited**

UNITED STATES PATENTS

3,218,876	11/1965	Berger	74/202
1,657,514	1/1928	Miller	180/19
2,138,239	11/1938	Irgens	180/19 (H)
2,448,968	9/1948	Franck	74/502
2,619,209	11/1952	Horn	15/340 UX
2,684,740	7/1954	Mader	192/49
2,697,364	12/1954	Koch	74/503
2,814,063	11/1957	Ripple	15/319
2,941,610	6/1960	Clemson	180/19
3,220,043	11/1965	Lampe	15/340

FOREIGN PATENTS

233,732	5/1961	Australia	287/53 H

Primary Examiner—Benjamin Hersh
Assistant Examiner—Leslie J. Paperner
Attorneys—Alfred G. Gross and E. A. Johnson

ABSTRACT: A power propelled suction cleaner includes a wheeled trolley having selectively operable torque transmitting means thereon for transmitting torque to surface engaging drive wheels. The cleaner includes a housing covering the trolley and the housing has a suction nozzle and rotatably driven agitator thereon. The cleaner also includes a handle adapted to be grasped by an operator for moving the cleaner over a surface. The housing and handle are each pivotally connected to the trolley for independent pivotal movement relative to the trolley and to one another. The handle includes manually actuatable operating means connected with the torque transmitting means for selectively engaging the torque transmitting means to transfer torque to drive wheels. Automatically operable disabling means is provided for preventing operation of the torque transmitting means by the manually actuatable operating means when the handle is placed in a predetermined pivoted position relative to the trolley. The cleaner further includes disabling means for raising the agitator out of contact with a surface being treated when the handle is placed in a predetermined pivoted position relative to the trolley. The manually actuatable operating means includes a hand grip reciprocatingly connected with the handle. The hand grip has a hollow interior which includes a cavity portion at which force transmitting means is attached. The hand grip includes a closure releasably secured thereto and closing the cavity. The closure may be removed from the hand grip while the hand grip is connected with the handle to provide exterior access to the connection for the force transmitting means.

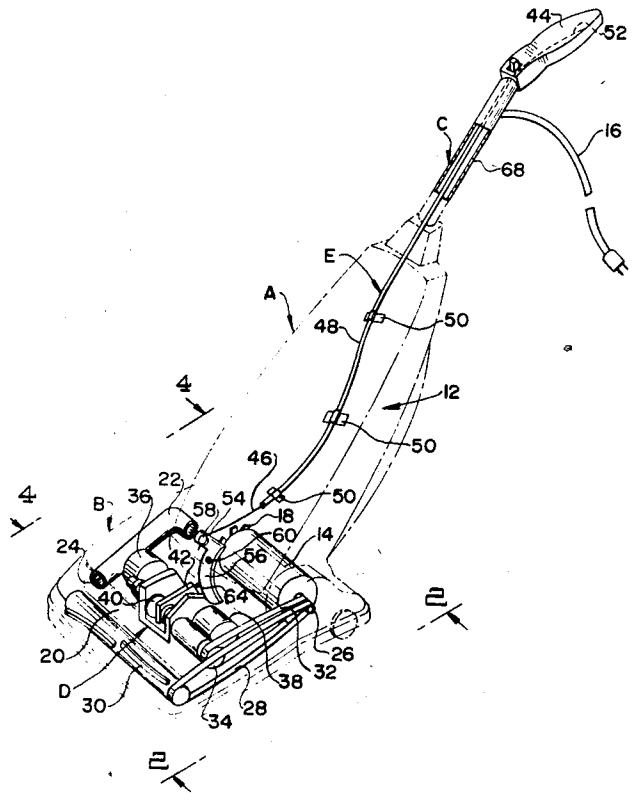

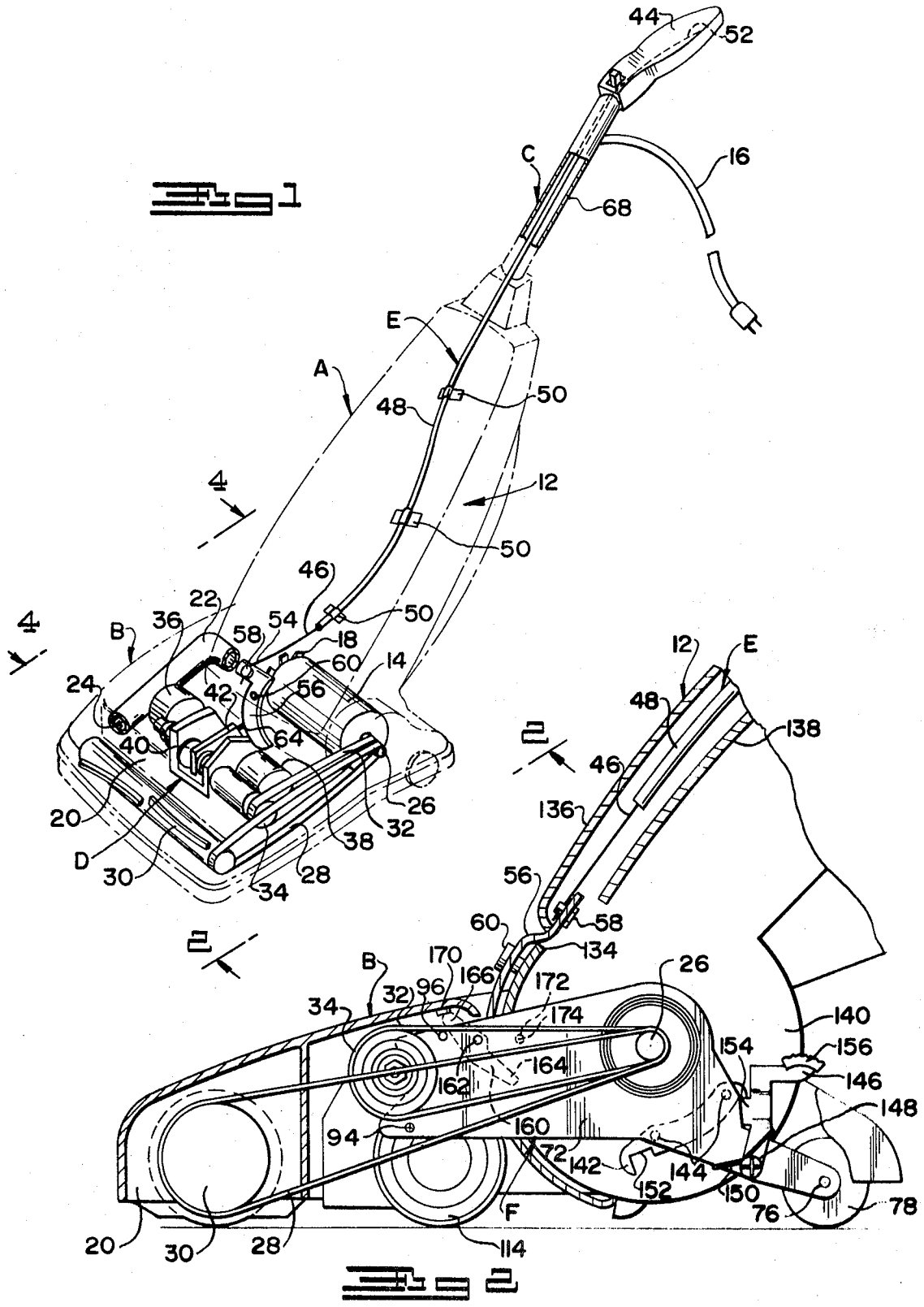
44
52
16
C
68
E
A
48
50
12
4
50
46
50
22
36
54
58
18
60
14
B
24
42
56
40
64
20
26
32
38
D
30
28
34
2
12
E
48
138
46
136
56
58
60
134
170
166
172
26
B
32
96
34
174
140
154
156
164
146
162
148
94
160
72
142
144
152
150
76
78
F
20
30
28
114

Fig 1

Fig 2

Fig 3

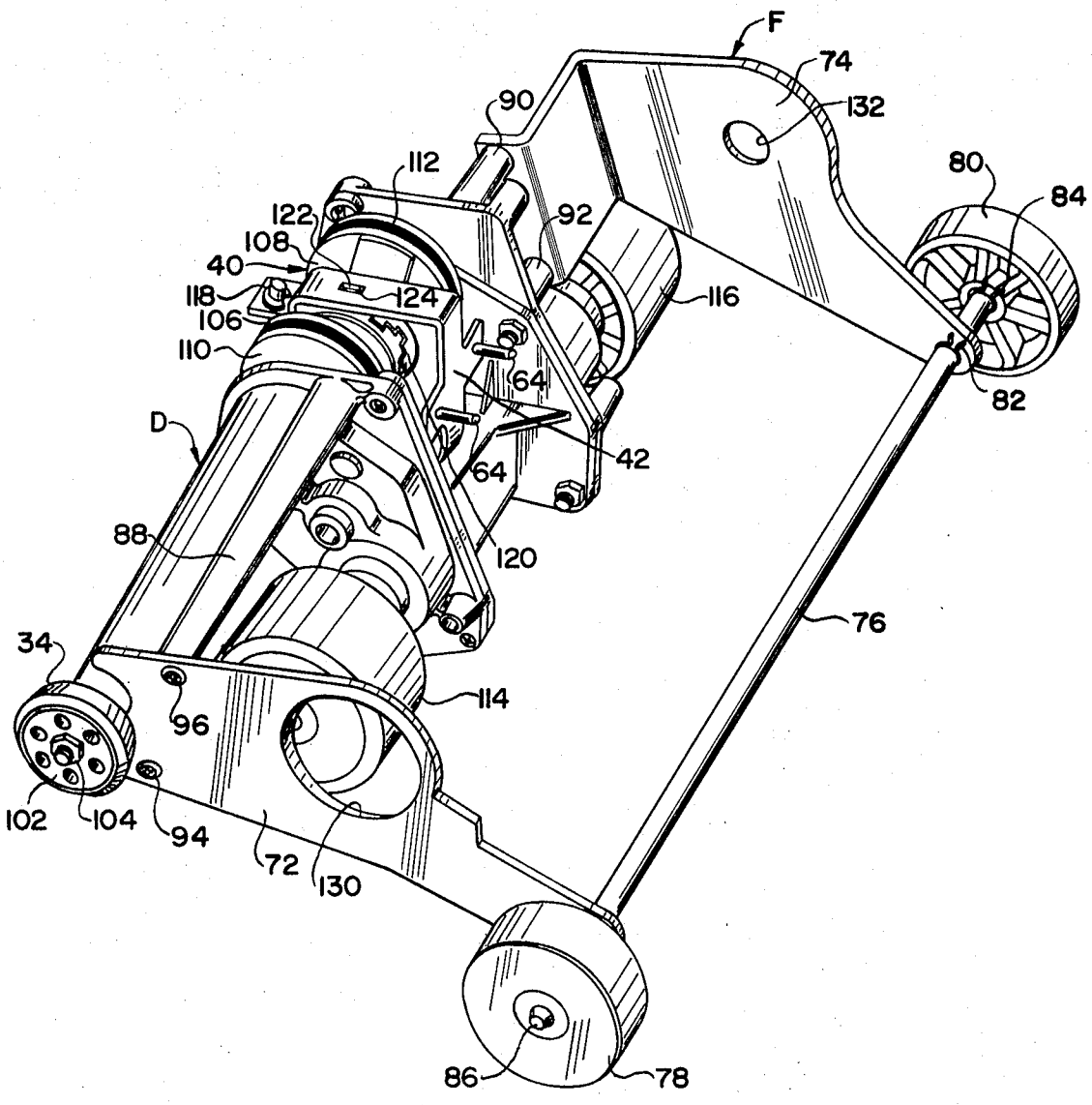
F
74
132
90
112
80
84
122
92
108
40
118
124
116
106
110
64
82
D
42
64
88
120
76
34
114
96
102
104
94
72
130
86
78

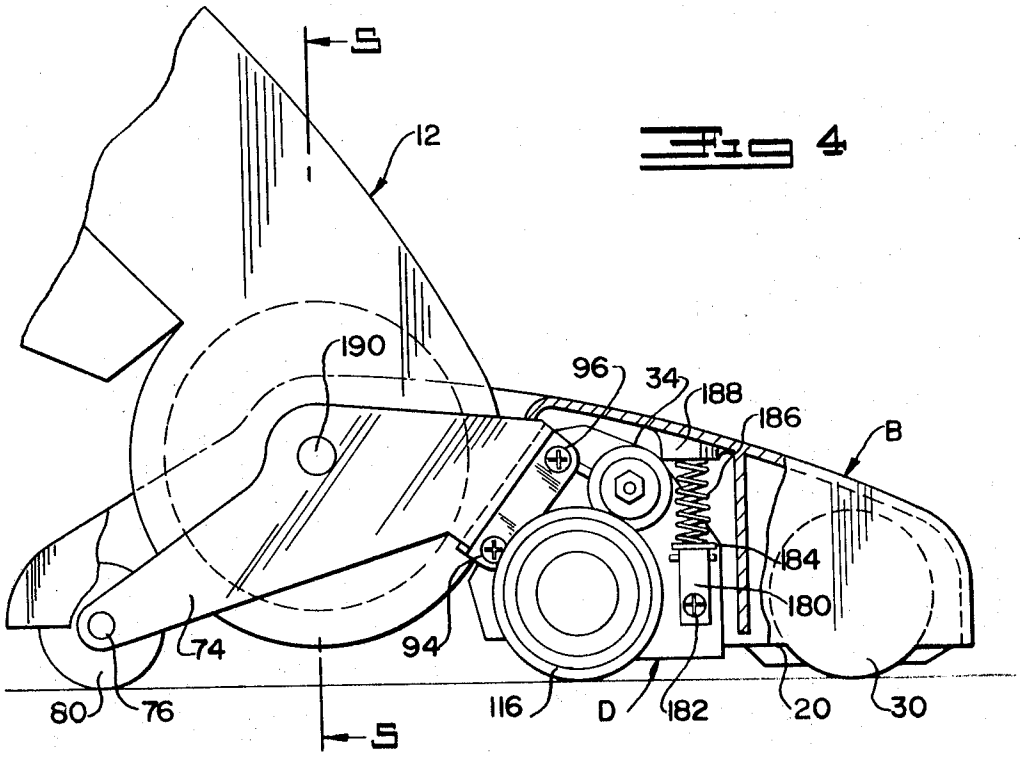
5
12
190
96
34
188
186
B
184
180
74
94
80
76
116
D
182
20
30
5

Fig 4

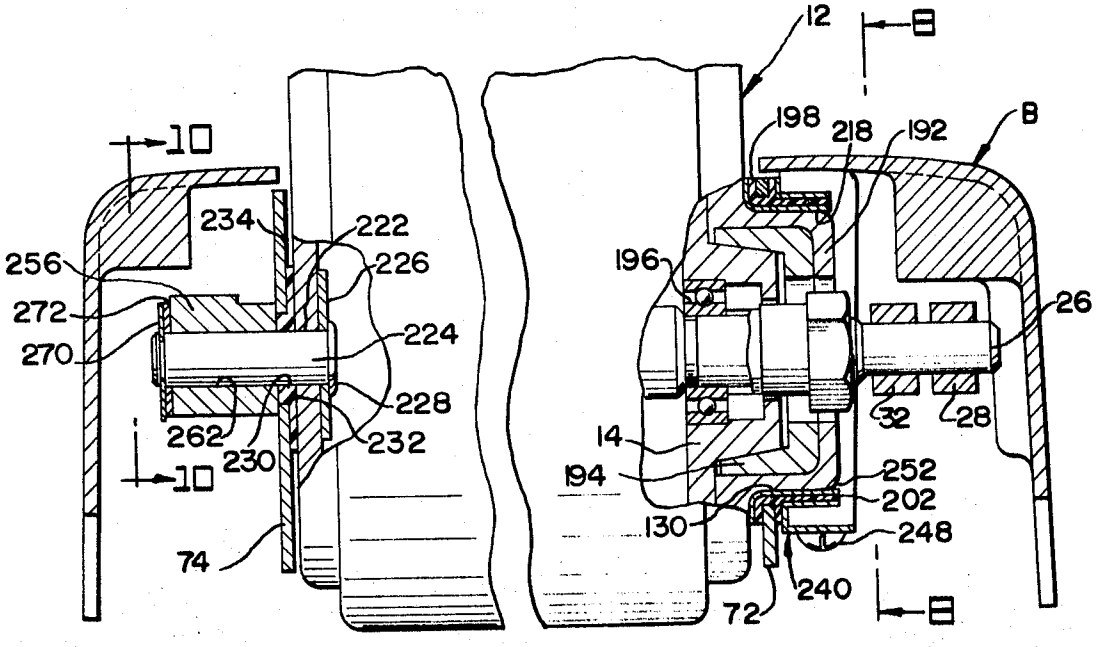
12
8
198
218
192
B
10
234
222
256
226
196
26
272
224
270
228
32
28
262
230
232
14
194
252
202
10
130
248
74
240
72
8

Fig 5

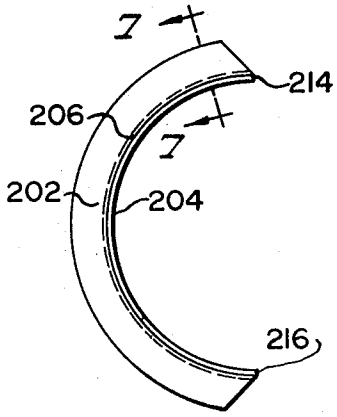

Fig 6

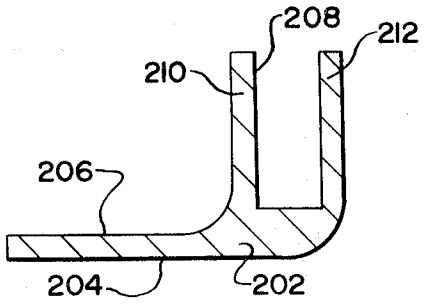

Fig 7

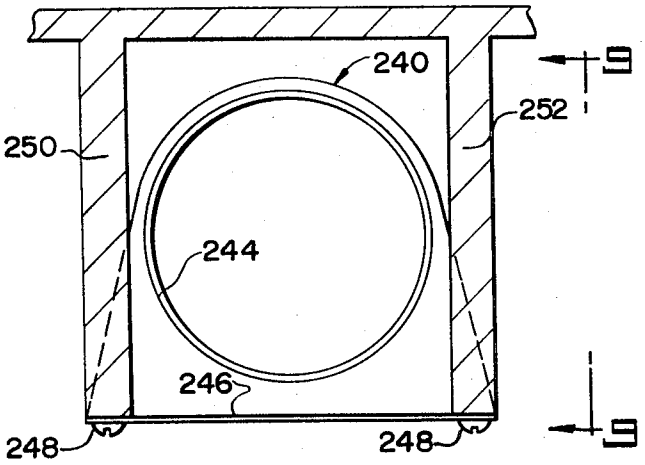

Fig 8

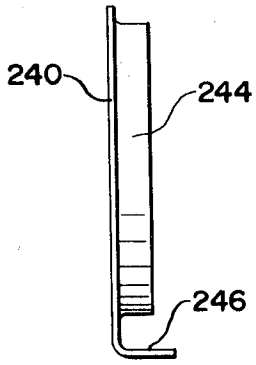

Fig 9

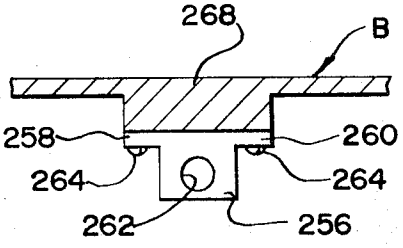

Fig 10

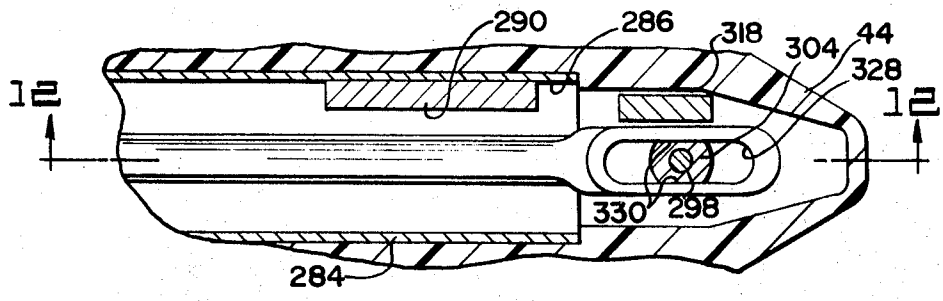

Fig 11

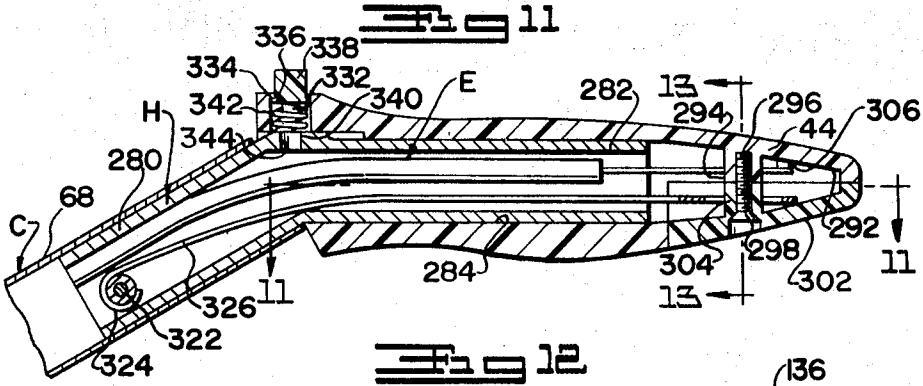

Fig 12

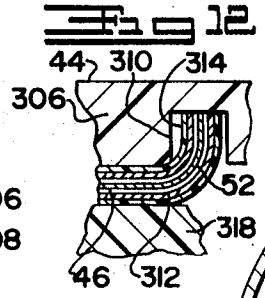

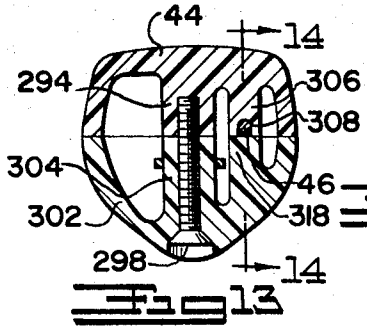

Fig 13

Fig 14

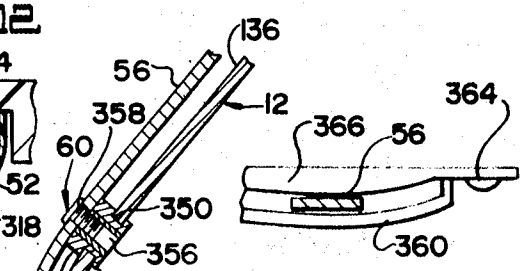

Fig 19

Fig 15

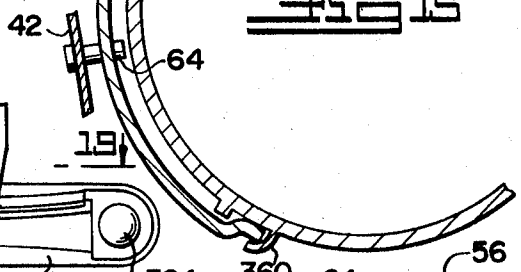

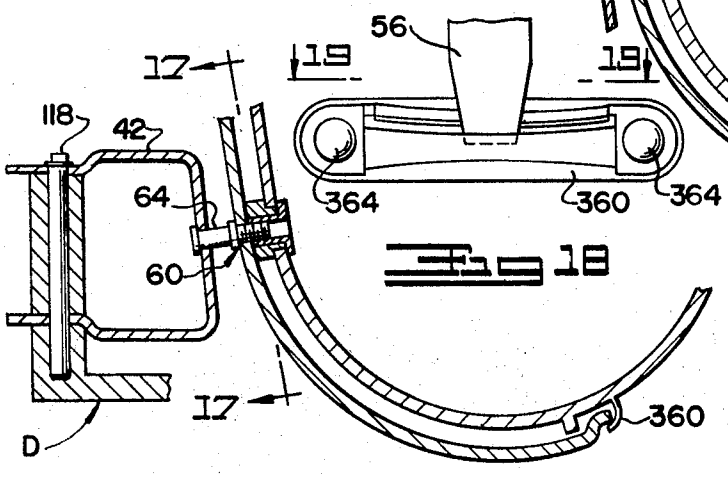

Fig 18

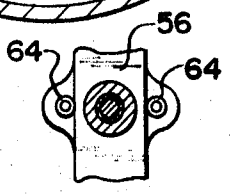

Fig 17

Fig 16

POWER PROPELLED SUCTION CLEANER

BACKGROUND OF THE INVENTION

This application pertains to the art of power propelled appliances and more particularly to power propelled suction cleaners. The invention is particularly applicable to an upright suction cleaner and will be described with particular reference thereto although it will be appreciated that certain aspects of the invention have broader applications and may be used in such other devices as power propelled lawnmowers or wheelbarrows and the like.

Power propelled suction cleaners have been previously proposed wherein driving torque is supplied to surface engaging wheels for propelling the cleaner in forward and rearward directions. Such prior devices have not been commercially successful due to their complexity in operation and their complexity in manufacture which has made their cost prohibitive. In addition, prior devices of this type have been extremely bulky and have included visible control components which detracted from the appearance of the cleaner. It would be desirable to have a power propelled suction cleaner which was extremely compact, and extremely simple to operate and assemble.

SUMMARY OF THE INVENTION

In accordance with the present invention, a power propelled suction cleaner includes a wheeled trolley. Mounted on the trolley is a selectively operable torque transmitting means for transmitting driving torque to surface engaging wheels. The trolley is enclosed beneath a housing on which a suction nozzle and a rotatably driven agitator are provided. The housing is pivotally attached to the trolley for pivotal movement of the suction nozzle and agitator toward and away from a surface being cleaned. A handle adapted to be grasped by an operator is also pivotally connected with the trolley. The housing and the handle each pivot independently relative to the trolley and to one another. With such an arrangement, operation of the cleaner with the handle in various pivoted positions relative to the trolley has no effect on the pivotal position of the nozzle or agitator relative to a surface being cleaned. In addition, such an arrangement has no tendency to raise the power driving wheels out of contact with a surface being cleaned.

In accordance with another aspect of the invention, the cleaner includes manually actuatable operating means connected with the torque transmitting means for selectively drivingly connecting the torque transmitting means with the driving wheels. The manually actuatable operating means includes automatically operable disabling means for preventing operation of the torque transmitting means when the handle is placed in a substantially upright position relative to the trolley. With such an arrangement, the manually actuatable operating means may be grasped by a person operating the cleaner and the cleaner may be manually propelled over a surface without engaging the torque transmitting means. This makes it possible to operate the cleaner manually if so desired and also reduces stress on the torque transmitting means when the cleaner is carried or transported by grasping the manually actuable operating means. More specifically, the manually actuatable operating means includes movable actuating means and the torque transmitting means includes follower means. The follower means cooperates with the actuating means for selectively connecting the torque transmitting means with driving wheels. The actuating means and the follower means are positioned against cooperation with one another when the handle is in a substantially vertical position relative to the trolley.

In accordance with a further aspect of the invention, the cleaner is provided with automatic disabling means for raising the agitator out of contact with a surface being cleaned when the handle is placed in a substantially vertical position relative to the trolley.

The torque transmitting means mounted on the trolley has a neutral position and the manually actuatable operating means includes a hand grip reciprocatingly connected with the handle. The hand grip has a detent button movably mounted thereon and the handle has abutment means thereon. The detent button is selectively movable into engagement with the abutment on the handle in order to lock the hand grip against reciprocating movement relative to the handle with the torque transmitting means in its neutral position. The hand grip is also hollow and includes a cavity portion. A force transmitting device extends from the hand grip to the torque transmitting means and is connected with the hand grip in the cavity portion. A separable closure is releasably secured to the hand grip at the cavity portion and closes the cavity. The closure is releasable from the hand grip while the hand grip is connected with the handle in order to provide exterior access to the cavity portion. A movement limiting device is also provided for limiting reciprocating movement of the hand grip relative to the handle. The movement limiting device is connected with the handle at a first connecting point and with the hand grip at a second connecting point at the cavity portion. The movement limiting device is connected for limited longitudinal movement with at least one of the connecting points. The movement limiting device limits the amount of force which can be transmitted through the force transmitting means from the hand grip to the torque transmitting means.

It is a principle object of the present invention to provide a power propelled appliance which is very simple to operate and manufacture, and is very compact in design.

It is also an object of the present invention to provide a power propelled appliance with a control which is automatically rendered inoperative to transmit driving torque to driving wheels when a handle of the appliance is placed in a predetermined position.

It is a further object of the present invention to provide power propelled appliance with a control arrangement which is very simple in the operation and simple to assemble.

It is a further object of the present invention to provide a power propelled appliance with a novel hand grip control having many advantageous features which include a detent button for selectively locking the hand grip against movement so that it is inoperative to engage a torque transmitting means with driving wheels.

BRIEF DESCRIPTION OF THE DRAWING

The invention may take physical form in certain parts and arrangements of parts, preferred embodiments of which will be described in detail in this specification and illustrated in the accompanying drawings which form a part hereof.

FIG. 1 is a diagrammatic perspective illustration of a suction cleaner having the present invention incorporated therein;

FIG. 2 is a partial, side, elevational cross-sectional view looking in the direction of arrows 2—2 of FIG. 1;

FIG. 3 is a perspective view of a wheeled trolley used in the suction cleaner of FIGS. 1 and 2;

FIG. 4 is a partial, side, elevational cross-sectional view looking in the direction of arrows 4—4 of FIG. 1;

FIG. 5 is a partial, elevational cross-sectional view looking in the direction of arrows 5—5 of FIG. 4;

FIG. 6 is a front elevational view of a bearing member used with the suction cleaner of FIG. 1;

FIG. 7 is a cross-sectional view looking in the direction of arrows 7—7 of FIG. 6;

FIG. 8 is a partial, side, elevational cross-sectional view looking in the direction of arrows 8—8 of FIG. 5 and with portions removed for clarity of illustration;

FIG. 9 is a partial, side elevational view looking in the direction of arrows 9—9 of FIG. 8 and with portions omitted for clarity of illustration;

FIG. 10 is a partial, side, elevational cross-sectional view looking in the direction of arrows 10—10 of FIG. 5 and with portions omitted for clarity of illustration;

FIG. 11 is a plan cross section view looking in the direction of arrows 11—11 of FIG. 12;

FIG. 12 is a side, elevational cross-sectional view looking in the direction of arrows 12—12 of FIG. 11 and showing a hand grip control in accordance with the present invention;

FIG. 13 is an elevational cross-sectional view looking in the direction of arrows 13—13 of FIG. 12;

FIG. 14 is a partial, side, elevational cross-sectional view looking in the direction of arrows 14—14 of FIG. 13;

FIG. 15 is a side, elevational cross-sectional view of the bottom handle portion of the suction cleaner of FIG. 1 and showing an arrangement of a control mechanism;

FIG. 16 is a cross-sectional view similar to FIG. 15 and showing the handle of the suction cleaner of FIG. 1 in a different pivoted position relative to the trolley of FIG. 3;

FIG. 17 is a cross-sectional view looking in the direction of arrows 17—17 of FIG. 16;

FIG. 18 is a plan view looking in the direction of arrows 18—18 of FIG. 17; and

FIG. 19 is an elevational view looking in the direction of arrows 19—19 of FIG. 18.

DESCRIPTION OF THE PREFERRED EMBODIMENTS

Referring now to the drawings, wherein the showings are for purposes of illustrating preferred embodiments of the invention only and not for purposes of limiting same, FIG. 1 shows an upright suction cleaner A having main housing portion B and handle assembly C. Handle assembly C includes a bag and motor housing 12 in which a dirt collecting bag may be positioned. The lower portion of bag housing 12 contains an electric motor 14 to which electric current is supplied through a suitable conductor 16. Motor 14 includes a fan 18 for drawing a suction in bag chamber 12 which communicates with nozzle 20 on main housing B through conduit 22. Conduit 22 has an inlet 24 communicating with suction nozzle 20. Motor 14 includes a rotatable output shaft 26 drivingly connected by belt 28 with surface contacting agitator 30 rotatably mounted in suction nozzle 20. Main housing B includes a torque transmitting transmission D which is drivingly connected with output shaft 26 of motor 14 through belt 32 and pulley 34. Torque transmitting transmission D is drivingly connected with surface contacting drive wheels 36 and 38 for propelling suction cleaner A over a surface to be cleaned. Transmission D includes clutch means 40 connected with actuator 42 for selectively engaging clutch 40.

Handle assembly C includes hand grip 44 which is mounted for reciprocating movement on handle assembly C. A bowden wire E, which includes a spring steel wire 46 slidably encased within a plastic tube casing 48, is secured to the interior front surface of bag housing 12 as by clamps 50. Clamps 50 may be adhesively attached to the inner front surface of bag housing 12 or secured thereto by screws, rivets or other suitable means. One end 52 of wire 46 is attached internally of hand grip 44 and the other end 54 is attached to lever 56 by suitable bolt 58. Lever 56 is connected to the exterior front bottom wall of bag housing 12 by a pivot pin 60. Lever 56 extends between pins 64 of clutch actuator 42. Reciprocating movement of hand grip 44 relative to handle assembly C causes longitudinal motion of wire 46 relative to casing 48 and handle assembly C so that lever 56 rotates on pivot 60. Pushing movement on hand grip 44 rotates lever 56 counterclockwise about pivot 60 for cooperation with pins 64 on actuator 42 and engages clutch 40 to transmit torque to wheels 36 for propelling cleaner A in a forward direction. Pulling movement on hand grip 44 causes lever 56 to pivot clockwise about pivot 60 and cooperate with pins 64 on actuator 42 to engage clutch 40 and provide driving torque to wheels 36 for propelling cleaner A in a rearward direction. Bowden wire E extends through tubular handle portion 68 of handle assembly C to connect with hand grip 44.

In accordance with the invention, suction cleaner A has a power driven wheeled trolley F as shown in FIG. 3. Trolley F includes spaced-apart sideplates 72 and 74. A shaft 76 extends through suitable holes formed in sideplates 72 and 74, and surface contacting wheels 78 and 80 are rotatably mounted on the ends of shaft 76 exteriorly of sideplates 72 and 74. C-shaped spring retainers as at 82 fit into circumferential grooves in shaft 76 for holding shaft 76 against longitudinal movement relative to sideplates 72 and 74. Similar retainers as at 84 may be used to hold wheels 78 and 80 on shaft 76 in cooperation with friction retainers as at 86. Transmission D may have a die cast aluminum housing which includes bosses as at 88, 90 and 92 having threaded bores formed axially therein. Sideplates 72 and 74 are formed with suitable holes through which screws such as 94 and 96 may extend into the threaded bores in the bosses. Sideplates 72 and 74 are then connected together in spaced-apart relationship by shaft 76 and transmission D. Pulley 34 is nonrotatably secured to the end of a rotatable shaft 102 as by nut 104. Pulley 34 and shaft 102 are rotatably driven by belt 32 from output shaft 26 of motor 14 as described with reference to FIG. 1. Clutch 40 is positioned on shaft 102 for rotation therewith and for limited movement axially thereof. Clutch 40 includes spaced-apart opposed friction discs 106 and 108 which are positioned adjacent power takeoff friction discs 110 and 112 rotatably mounted on transmission D independent of shaft 102. Power takeoff friction discs 110 and 112 are drivingly connected through gear trains to surface engaging wheels 114 and 116 which are nonrotatably secured to the ends of a shaft rotatably mounted on the housing of transmission D. Clutch actuator 42 is pivotally connected with the housing of transmission D by pivot pin 118. A bearing 120 surrounds clutch 40 so that clutch 40 may rotate relative to bearing 120 and actuator 42. Bearing 120 is also a thrust bearing so that lateral movement of bearing 120 transmits lateral force to clutch 40. Actuator 42 is connected with bearing 120 as by arms 122 attached to bearing 120 and extending through a rectangular hole 124 in actuator 42. Movement of actuator 42 to the left in FIG. 3 causes clutch disc 106 to engage power takeoff disc 110 and transmit driving torque to wheels 114 and 116 in a direction to propel suction cleaner A forwardly. Pivotal movement of actuator 42 on pivot pin 118 to the right in FIG. 3 causes clutch disc 108 to engage power takeoff disc 112 and drives wheels 114 and 116 in a direction to propel cleaner A rearwardly. Sideplates 72 and 74 include holes 130 and 132 for pivotally attaching main housing B and handle assembly C to trolley F in a manner which will be more fully described as the description proceeds.

Lever 56 is bent outwardly and extends through a slot 134 formed in front wall 136 of bag housing 12. A bulkhead wall 138 is secured to the interior of bag housing 12 in spaced relationship to front wall 136 to provide an enclosed space through which bowden wire E extends. Clamps 50 for bowden wire E may be secured to bulkhead 138 as desired.

The bottom portion of bag housing 12, in which motor 14 is mounted, has a substantially cylindrical cross-sectional shape as shown in FIG. 2 and includes a side wall 140. Side wall 140 has a latching bracket 142 secured thereto as by screws or rivets 144. Sideplate 72 has a latching arm 146 pivotally secured thereto as by screw 148. Latching arm 146 is biased in a counterclockwise direction as viewed in FIG. 2 by torsion spring 150. Latch member 142 includes a notch 152 in which a projection 154 on latching arm 146 is receivable. When handle assembly C is pivoted in a counterclockwise direction as viewed in FIG. 2, latch member 142 also moves counterclockwise until notch 152 is positioned opposite projection 154 at which time projection 154 moves into notch 152 by force of spring 150. This locks handle assembly C in a substantially vertical position relative to trolley F in main housing B. Downward force on foot pad 156 of latching arm 146 pivots latching arm 146 clockwise about screw 148 and releases projection 154 from notch 152 so that handle assembly C may again be moved to various pivoted positions relative to trolley F and main housing B.

The interior flat face of sideplate 72, which faces side wall 140 of bag housing 12, has a lever 160 pivotally attached thereto by screw or pin 162. Lever 160 includes a cam portion

164 and a nose portion 166. Nose portion 166 is positioned above screw 96 and boss 88 of transmission D so that lever 160 is normally prevented from pivoting in a counterclockwise direction about screw 162 as viewed in FIG. 2. Main housing B includes a downwardly extending boss 170 positioned directly above nose 166 of lever 160. A roller 172 is secured to wall 140 of bag housing 12 as by screw 174. When handle assembly C is pivoted counterclockwise as viewed in FIG. 2, roller 172 on wall 140 moves into engagement with the upper edge of cam portion 164 of lever 160 to pivot nose 166 clockwise about screw 162. Nose 166 engages projection 170 and pivots main housing B clockwise about an axis defined by motor shaft 26 so that agitator 30 and nozzle 20 are moved out of contact with a surface being treated. That is, agitator 30 and the bottom peripheral edge of nozzle 20 move upwardly substantially above the plane in which the bottom portions of wheels 80 and 116 lie. Therefore, movement of handle assembly C to a substantially vertical position relative to trolley F automatically moves main housing B to a position in which agitator 30 and nozzle 20 are spaced above a surface being treated. It will be appreciated that this mechanism defines an automatic disabling means which automatically disables agitator 30 and nozzle 20 from acting on a surface when handle assembly C is in a substantially vertical position. This is a very useful arrangement for upright suction cleaners which include arrangements for connecting off-the-floor cleaning tools. For example, handle assembly C may be placed in a substantially vertical position where it will become latched by cooperation of notch 152 and projection 154. In this position, a separate hose for off-the-floor cleaning tools may be connected with bag chamber 12 so that walls or draperies may be cleaned. With the present arrangement, agitator 30 and nozzle 20 are automatically moved out of contact with the surface on which wheels 80 and 116 rest so that a carpet will not be agitated and possibly harmed by agitator 30 when cleaner A is in a stationary position during use of off-the-floor cleaning tools.

With reference to FIG. 4, the housing of transmission D has an angle bracket 180 secured thereto as by screw 182. Angle bracket 180 has an abutment ledge 184 on which a coil spring 186 rests. The under surface of main housing B has a downwardly extending abutment 188 against which the upper end of coil spring 186 abuts. Coil spring 186 cooperates with ledge 184 and abutment 188 to normally bias main housing B upwardly relative to trolley F and counterclockwise about pivot 190 as viewed in FIG. 4. The weight of the forward portion of main housing B and agitator 30 is sufficient to normally compress coil spring 186 sufficiently so that agitator 30 will contact a surface on which wheels 80 and 116 are supported, and so that nozzle 20 will effectively pickup litter loosened by agitator 30. However, coil spring 186 counter balances some of the weight of the forward portion of main housing B and agitator 30 so that agitator 30 will not impress itself deeply into a carpet being cleaned.

The rear of main housing B is pivotally attached to trolley F in a manner shown in FIG. 5. One side of the bottom cylindrical portion of bag housing 12 is formed with an outwardly extending projection 192 which has a cylindrical cross-sectional shape. One end of motor 14 is received in a support 194 within projection 192 and motor shaft 26 is supported by suitable bearings as at 196 within the motor housing. Hole 130 in sideplate 72 is provided with a bearing 198 of a type shown in FIGS. 6 and 7. Bearing 198 is formed in two C-shaped segments, only one of which is shown at 202 in FIG. 6. In a preferred arrangement, bearing section 202 is formed of a synthetic plastic material such as polyamide having graphite mixed with it. Bearing segment 202 includes an inner bearing surface 204 and an outer bearing surface 206. Bearing segment 202 also has an arcuate groove 208 defined between flanges 210 and 212. Bearing segment 202 may be slightly flexible and is bent to be received in hole 130 so that the peripheral portion of hole 130 will be received within channel 208. Terminal ends 214 and 216 of bearing segment 202 will then abut corresponding ends of a similar C-shaped bearing segment positioned within hole 130.

The outer surface of projection 192 on the bottom portion of bag housing 12 has a cylindrical metal ring 218 tightly fitted thereover. Metal ring 218 and projection 192 extend through hole 130 in sideplate 72 of trolley F as shown in FIG. 5 so that the exterior surface of ring 218 is in sliding engagement with inner bearing surface 204 of bearing segment 202. Therefore, pivotal movement of handle assembly C and bag housing 12 allows ring 218 and projection 192 to rotate relative to bearing segments 202 and with respect to sideplate 72 of trolley F.

The other side of the lower portion of bag housing 12 has a hole 222 formed therein through which a pin 224 extends. A washer 226 may be positioned against the interior wall surface to cooperate with an enlarged head 228 on pin 224. Pin 224 extends through hole 230 of bearing 232. Bearing 232 may be formed of a polyamide having graphite intermixed therewith. Bearing 232 is positioned within hole 132 of sideplate 74 and has a flange portion 234 trapped between the innerface of sideplate 74 and the outerface of the bottom side portion of bag housing 12. With this arrangement, handle assembly C and bag housing 12 are freely pivotable relative to trolley F so that pivotal movement of handle assembly C to various pivoted positions during use of suction cleaner A does not disturb the position of trolley F or have any tendency to raise driving wheels 114 and 116 off from a surface being cleaned.

Housing B has a bearing bracket 240 secured thereto as shown in FIG. 8. Bearing bracket 240 has a circular hole 242 formed therein and a laterally extending cylindrical flange 244. A laterally extending lower flange 246 has holes formed therein through which screws 248 may extend. The underside of main housing B has bosses 250 and 252 formed therein. The ends of bosses 250 and 252 are bored for threadedly receiving screws 248. Screws 248 tightly clamp bottom flange 246 of bearing bracket 240 against the ends of bosses 250 and 252 to tightly hold bearing bracket 240 to main housing B against movement relative thereto. Bearing bracket 240 is received over outer bearing surface 206 of bearing segments 202 as shown in FIG. 5. Bearing bracket 240 is then free to pivot along with main housing B relative to trolley F and also relative to handle assembly C and bag housing 12.

An additional bracket at the other side of main housing B attaches the other side of main housing B to sideplate 74. A bearing bracket 256 having lateral flanges 258 and 260 is shown in FIG. 10. Bracket 256 has a hole 262 axially therethrough and suitable holes are provided in flanges 258 and 260 through which screws 264 may extend. The upper undersurface of main housing B has a downwardly extending enlarged boss 268 which has suitable bores therein for threadedly receiving screws 264. Screws 264 extend through holes in flanges 258 and 260, and thread into bores in enlarged boss 268 to hold bearing bracket 256 to main housing B against movement relative thereto. As shown in FIG. 5, pin 224 extends through hole 262 in bearing bracket 256 and a C-ring 270 is received in a circumferential groove in the outer end of pin 224 to cooperate with washer 272 for holding bearing bracket 256 rotatably on pin 224. Therefore, bearing bracket 256 may pivot with housing B about pin 224 relative to sideplate 74 and also relative to bag housing 12. With the arrangement described, it will be recognized that both handle assembly C and main housing B are pivotally attached to trolley F for independent pivotal movement relative to trolley F and also relative to one another. In addition, it will be recognized that handle assembly C and housing B are pivotally attached to trolley F on a common pivotal axis. With this arrangement, pivotal movement of handle assembly C during use of suction cleaner A does not interfere with the optimum position of housing B and has no effect on trolley F. In addition, floating movement of housing B during use of suction cleaner A has no effect on the position of trolley F or handle assembly C. This arrangement is particularly advantageous in a power propelled cleaner.

In accordance with another aspect of the invention, hollow tubular portion 68 of handle assembly C has one end 280 of a hollow angle member H received therein. End 280 may be a force fit within the open end of tubular portion 68 or may be

secured therein by screws or adhesive or the like as desired. Other end 282 of hollow angled member H has hand grip 44 slidably positioned thereon. End 282 is substantially cylindrical in cross section as is bore 284 in hand grip 44. As shown, hand grip 44 is substantially completely hollow. The materials of which angle member H and grip 44 are formed may be metal or synthetic plastic as desired. In one arrangement, hand grip 44 is molded of synthetic plastic material and a tubular anodized aluminum sleeve 286 is positioned in bore 284 to define a wearing surface. Sleeve 286 may be a force fit within bore 284 or may be adhesively secured therein as desired. The interior diameter of sleeve 286 is slightly greater than the exterior diameter of end portion 282 of angle member H so that hand grip 44 may reciprocate axially relative to end portion 282. Bore 284 in hand grip 44 may have a radially inward extending projection 290 formed therein for reception in an elongated slot formed in end portion 282 to prevent rotational movement of hand grip 44 relative to end portion 282. It will be recognized that it is also possible to prevent rotational movement of hand grip 44 relative to end portion 282 in other fashions such as by making end portion 282 and bore 284 of noncircular cross-sectional shape. The hollow interior of hand grip 44 includes a portion adjacent its outer end which may be termed a connecting cavity portion 292. Connecting cavity portion 292 includes a downwardly extending boss 294 having a bore 296 therein for threadedly receiving a screw 298. The bottom rear portion of hand grip 44 is separate from the rest of the hand grip portion and defines a separable closure 302 which is releasably secured to hand grip 44 and closes cavity 292 so that the exterior surface of hand grip 44 is completely smooth and there are no openings into the hollow interior of hand grip 44. Closure 302 has an upwardly projecting interior boss 304 through which a bore is formed and through which screw 298 may extend for threading into bore 296 and releasably securing closure 302 in position.

Cavity portion 292 is also formed with a downwardly extending projection 306 having a groove 308 formed therein extending axially of hand grip 44 as shown in FIG. 13, and a circular hole 310 as shown in FIG. 14. End portion 52 of wire 46 is bent at right angles and positioned within hole 310. In order to prevent fracture of wire 46 during bending of end portion 52, a tubular brass sleeve 312 is snugly positioned over the end portion of wire 46 along with a tubular sleeve 314 of synthetic plastic material snugly fit over brass sleeve 312. This composite assembly is then griped and bent so that a right angled bend is imparted to end portion 52 of wire 46 simultaneously with bending of brass sleeve 312 and sleeve 314. Placing brass sleeve 312 and plastic sleeve 314 over the end portion of wire 46 prior to bending prevents nicking of the wire by a bending tool which may cause fracture thereof. In addition, a smooth bend is imparted to end portion 52 of wire 46 by providing the larger diameter brass sleeve 312 and a good deal of the stress is taken by sleeve 312. Plastic sleeve 312 also prevents nicking and irregular deformation of brass sleeve 312 by bending tool.

A portion of the composite plastic sleeve 314, brass sleeve 312 and wire 46 are received in groove 308. Closure member 302 has an upwardly extending projection 318 which defines a trapping means to substantially abut against that portion of the composite wire which is positioned in groove 308. Projection 318 snugly holds bent end 52 securely within hole 310 in handle 44.

It will now be apparent that reciprocating axial movement of hand grip 44 relative to end portion 282 of hollow angle member H also imparts longitudinal movement to wire 46 relative to handle assembly C, main housing B and transmission D. This longitudinal movement of wire 46 is translated into angular movement of lever 56 in a manner previously described to operate actuator 42 for clutch 40. It will also be noted that Bowden wire E is completely hidden from exterior view and extends completely through hollow portions of suction cleaner A to connection with lever 56.

In order to prevent excessive force being applied to clutch actuator 42, a movement limiting strap means is provided for limiting reciprocal movement of hand grip 44 relative to end portion 282 of hollow angle member H. A pin 322 extends across hollow portion of end portion 280 of angle member H and its ends are received in suitable holes formed in end portion 280. A curved end 324 of a metal strap 326 is received around pin 322. Strap 326 extends through hollow angle member H to connecting cavity 292. The other end of strap 326 has an elongated slot 328 formed therein extending axially of hand grip 44. The opposite sides of projection 304 on closure 302 are flattened as at 330 and slot 328 is received over projection 304 as shown in FIG. 11. When clutch actuator 42 is in a neutral position so that no driving torque is supplied to driving wheels 36 and 38, projection 304 is positioned substantially centrally of slot 328. Any attempt at overtravel movement of hand grip 44 relative to end portion 282 of hollow angle sleeve H will cause the end portions of slot 328 to strike against projection 304 so that no further stress can be imparted to any of the parts by bowden wire E. It will be recognized that slot 328 may cooperate with a projection element formed in cavity 292 of hand grip 44 rather than with a projection on closure 302 if so desired. In addition, it will be recognized that strap 326 may simply be a wire which is bent into a loop at one end to form a slot similar to slot 328 in strap 326. With the arrangement described, it will be recognized that it is a very simple matter to effect connection between wire 46 and hand grip 44 which might not otherwise be possible. For example, bowden wire E and strap 326 may be assembled in the position shown in FIG. 12 while hand grip 44 is removed from end portion 282. Hand grip 44 may then be axially moved over end portion 282 of angle member H to the position shown in FIG. 12. With closure 302 removed, end portion 52 of wire 46 may be bent and positioned in hole 310. Securing closure 302 in place automatically traps end portion 52 of wire 46 in position and also effects connection between closure 292 and strap 326. It will be recognized that it is possible to provide for limited longitudinal movement of strap 326 at pin 322 if so desired. The important feature is that strap 326 has a connecting point to hand grip 44 and limited longitudinal movement of hand grip 44 relative to strap 326 is provided at one of the connecting points.

Torque transmitting transmission D is normally in a neutral position wherein no driving torque is provided to wheels 114 and 116 simply due to the absence of any reacting force between friction discs 108 or 112, or between friction discs 106 and 110. Therefore, the absence of any force tending to reciprocate hand grip 44 forwardly or rearwardly on end portion 282 will cause transmission D to be in a neutral position because the absence of reacting force between the friction discs will not permit transmission of driving torque from the clutch to the power takeoff discs. At certain times, it may be desirable to utilize suction cleaner A without power propulsion. At other times, it may be desirable to tilt suction cleaner A back on rear wheels 78 and 80 while handle assembly C is locked in a substantially vertical position for transporting suction cleaner A from one position to another. In such circumstances, it is desirable to prevent reciprocating movement of hand grip 44 relative to end portion 282 so that large forces are not transmitted to actuator 42. For this purpose, a stepped hole 332 is formed through the front upper portion of hand grip 44. Stepped hole 332 provides a shoulder 334 against which a circumferentially projecting bottom flange 336 on detent button, or abutment, 338 may abut. The bottom portion of detent button 338 includes a circular axial extension 340. A coil spring 342 bears against the outer surface of hollow angle member H and against the bottom surface of detent button 338 around extension 340. Spring 342 normally biases detent button 338 upwardly to the position shown in FIG. 12. A hole, or pocket, 344 formed in hollow angle member H defines an abutment which cooperates with extension 340. When actuator 42 is in its neutral position, extension 340 and hole 344 are substantially aligned and manual pushing force by a person's

thumb on detent button 338 causes button 338 to reciprocate downwardly against the bias of spring 342 until extension 340 is received in hole 344. Cooperation between extension 340 and hole 344 then prevents further reciprocating movement of hand grip 44 relative to end portion 282. It will be noted that detent button 338 has an automatic release because simply removing biasing force of a person's thumb allows coil spring 342 to automatically bias detent button 338 to the position shown in FIG. 12, whereby hand grip 44 is again free to reciprocate.

In accordance with a further aspect of the invention, a disabling arrangement is provided for preventing operation of actuator 42 when handle assembly C is in a substantially vertical position. As shown in FIG. 15, the lower cylindrical portion of bag assembly 12 has a hole 350 formed therein. A bushing having a flange 352 is positioned through hole 350 and its other end is spun over to provide a flange 354 which traps the bushing in position. The bushing is provided with an axial bore which receives sleeve 356 having interior threads therein for threadedly receiving screw 358 which extends through a hole in lever 56 and pivotally holds lever 56 in position to the lower portion of bag housing 12. As shown in FIG. 15, lever 56 is arcuately curved to extend in curved and parallel relationship with the cylindrical lower end portion of bag housing 12. Both lever 56 and the lower portion of bag housing 12 are curved to lie substantially on circles having their centers at the pivotal axis of housing B and handle assembly C. It will be recognized that the lower portion of lever 56 is received between pin 64 on actuator 42 during all normal pivoting movement of handle assembly C relative to trolley F during operation of suction cleaner A. Therefore, in all normal pivoted positions of handle assembly C relative to trolley F while suction cleaner A is being used, lever 56 extends between pins 64 of actuator 42 for selectively engaging transmission D. However, in the substantially vertical locked position of handle assembly C relative to trolley F, pivot 60 for lever 56 is substantially axially aligned with the center of pins 64 as shown in FIGS. 16 and 17. When so arranged, it will be recognized that pivotal movement of lever 56 about pivot point 60 will not move clutch actuator 42 because no moving part of lever 56 can engage pins 64. With this arrangement, lifting of suction cleaner A by hand grip 44 when handle assembly C is locked in its substantially vertical position will not impart harmful forces to transmission D. It will be recognized that this arrangement provides an automatic disabling means for preventing operation of transmission D when handle assembly C is locked in its substantially vertical position. This is also particularly advantageous when using suction cleaner A with off-the-floor tools. Use of suction cleaner A with off-the-floor tools when handle assembly C is locked in its substantially vertical position disables transmission D so that motive power may not be intentionally or accidentally supplied to driving wheels 114 and 116.

In a preferred arrangement, the lower curved portion of bag housing 12 is provided with a curved flange 360 to define a pocket in which the end portion of lever 56 is received. This prevents snagging of the end portion of lever 56 on any materials into which it would normally come in contact by being positioned closely adjacent surfaces on which suction cleaner A is used. Pocket forming member 360 for the end of lever 56 may be formed from a sheet metal stamping as shown in FIGS. 18 and 19. The end portions of member 360 may be secured to the lower portion of bag housing 12 by rivets or screws 364 and its central portion is curved outwardly. A rear wearing member 366 may be secured to the lower portion of bag housing 12 beneath stamping 360. In operation, the end portion of lever 56 may slide against either pocket forming member 360 or wearing member 366.

It will be recognized that the combination of hand grip 44, bowden wire E, lever 56 and clutch actuator 42 defines a manually operable actuating means for selectively engaging transmission D to provide driving torque to wheels 114 and 116. The driving force provided to wheels 114 and 116 depends upon the normal force between friction discs 106 and 110, or between friction discs 108 and 112. Since the normal force between friction discs depends upon the reciprocating force applied to hand grip 44, the propelling force applied to wheels 114 and 116 is proportional to the manual force applied to hand grip 44. The manual reciprocating force applied to hand grip 44 also tends to move cleaner A over a surface. However, lever 56 cooperates with bowden wire E to provide a mechanical advantage so that the normal force applied between friction discs is several times the manual force applied to hand grip 44. In addition, the propelling force applied to wheels 114 and 116 is several times the propelling force which is manually applied to cleaner A by a person reciprocating hand grip 44. The present arrangement provides a smooth and substantially effortless arrangement for power propelling an appliance over a surface under complete control of the operator.

While the disabling arrangement for rendering lever inoperative to actuate actuator 42 has been described as being operational when handle assembly is in a substantially vertical position, it will be recognized that the described arrangement may be positioned so that the lever is disabled from operating actuator 42 in any predetermined pivoted position of handle assembly C relative to trolley F. Likewise, the disabling arrangement for automatically raising agitator 30 out of contact with a surface may be operated in any desired predetermined pivoted position of handle assembly C relative to trolley F.

While the invention has been described with reference to certain preferred embodiments, it is obvious that modifications and alterations will occur to others upon the reading and understanding of this specification.

We claim:

1. In a power propelled device including a main body having surface engaging drive means thereon, the improvement comprising

torque transmitting means carried by said body and including a pair of clutches selectively engageable to cause rotation of said drive means in opposite directions to thereby propel said device in opposite directions,

a manipulating handle adapted to be grasped by an operator of the device and said handle being secured to said body for movement between a normal use position and a storage position,

and an actuator associated with said handle and effective to engage said clutches, said actuator being movable in opposite directions from an intermediate position in which neither of said clutches are engaged,

in the normal use position of said handle, movement of said actuator in one direction from its intermediate position being effective to engage one of said clutches to cause rotation of said drive means in one direction and movement of said actuator in the opposite direction from its intermediate position being effective to engage the other of said clutches to cause rotation of said drive means in the opposite direction,

in the storage position of said handle, said actuator being ineffective to engage either of said clutches.

2. The structure of claim 1 wherein said actuator has a portion bodily movable with said handle between normal use and storage positions of the latter,

wherein said actuator portion is positioned for cooperation with said clutches when said handle is in normal use position,

and wherein said actuator portion is positioned away from cooperation with said clutches when said handle is in storage position.

3. The structure of claim 2 wherein a pivot is carried by and bodily movable with said handle,

wherein said actuator portion is mounted on said pivot and is shiftable about the axis thereof in response to relative movement between the device operator and the grasped device,

wherein said actuator portion has a part spaced radially of said pivot for cooperation with said clutches to engage

the latter when said handle is in normal use position aforesaid,

and wherein said actuator portion part is spaced from cooperation with said clutches when said handle is in storage position aforesaid.

4. The structure of claim 3 wherein a pivot connection secures said handle to said device body for pivotal movement between its normal use and storage positions aforesaid,

wherein said actuator portion part is arcuate and is generally concentric with the axis of said handle pivot connection,

and wherein said torque transmitting means includes a follower for actuating said clutches, said follower having operable engagement with said arcuate actuator portion part in all normal use positions of said handle.

5. The structure of claim 4 wherein said follower comprises a lever having a bifurcated portion,

and wherein said arcuate actuator portion part is disposed between said lever furcations in all normal use positions of said handle.

6. The structure of claim 4 wherein said follower comprises a lever having a bifurcated portion,

wherein said arcuate actuator portion part is disposed between said lever furcations in all normal use positions aforesaid of said handle,

and wherein said actuator portion pivot is substantially aligned with said lever furcations in the storage position aforesaid of said handle.

7. The structure of claim 1 wherein said actuator comprises a handgrip adapted to be grasped by the device operator and reciprocably mounted on said handle,

and wherein selectively operable latch means is in part carried by said handle and in part carried by said handgrip for selectively retaining said handgrip in its intermediate position aforesaid.

8. The structure of claim 7 wherein resilient means yieldably biases said latch means to position providing for handgrip reciprocation away from its intermediate position aforesaid.

9. The structure of claim 7 wherein said latch means comprises an abutment carried by said handgrip for movement transversely thereof,

wherein said handle provides a pocket aligned with said abutment when said handgrip is in its intermediate position aforesaid,

wherein resilient means yieldably biases said abutment to spaced relation with said handle pocket,

and wherein movement of said abutment into said handle pocket retains said handgrip in said intermediate position aforesaid.

10. In a power propelled device including a main body portion mounting torque transmitting means and a device manipulating handle, the improvement comprising

an elongated handgrip adapted to be grasped by an operator and reciprocably connected to said handle, said handgrip having a hollow interior providing a cavity adjacent one end thereof and said hollow interior opening outwardly of said handgrip at the opposite end thereof for receiving said handle, said handgrip further having a removable closure portion closing said cavity and providing for access thereinto while said handgrip is connected to said handle,

force transmitting means connected to said handgrip within said cavity and associated with said torque transmitting means whereby reciprocation of said handgrip controls said torque transmitting means,

and movement limiting means for limiting reciprocatory handgrip movement relative to said handle, said movement limiting means being connected with said handle at a first connecting point and with said handgrip within said cavity at a second connecting point, said movement limiting means being connected for limited longitudinal movement with at least one of said connecting points.

11. The structure of claim 10 wherein said movement limiting means is connected for limited longitudinal movement with said second connecting point,

wherein said movement limiting means provides a slot,

and wherein said handgrip provides a post extending through said movement limiting means slot.

* * * * *