(12) INTERNATIONAL APPLICATION PUBLISHED UNDER THE PATENT COOPERATION TREATY (PCT)

(19) World Intellectual Property Organization
International Bureau

(43) International Publication Date
21 November 2024 (21.11.2024)

WIPO | PCT

(10) International Publication Number
WO 2024/234751 A1

(51) International Patent Classification: *H04W 28/24* (2009.01)

(21) International Application Number: PCT/CN2024/076444

(22) International Filing Date: 06 February 2024 (06.02.2024)

(25) Filing Language: English

(26) Publication Language: English

(71) Applicant: **LENOVO (BEIJING) LIMITED** [CN/CN]; 6 Shangdi West Road, Haidian District, Beijing 100085 (CN).

(72) Inventors: **DAI, Mingzeng**; Lenovo HQ East, Building No. 1, No. 10 Xibeiwang East Road, Haidian District, Beijing 100094 (CN). **XU, Xiaoying**; Lenovo HQ East, Building No. 1, No. 10 Xibeiwang East Road, Haidian District, Beijing 100094 (CN). **LUO, Haiyan**; Lenovo HQ East, Building No. 1, No. 10 Xibeiwang East Road, Haidian District, Beijing 100094 (CN).

(74) Agent: **KING & WOOD MALLESONS**; 20th Floor, East Tower, World Financial Centre, No. 1 Dongsanhuan Zhonglu, Chaoyang District, Beijing 100020 (CN).

(81) Designated States *(unless otherwise indicated, for every kind of national protection available)*: AE, AG, AL, AM, AO, AT, AU, AZ, BA, BB, BG, BH, BN, BR, BW, BY, BZ, CA, CH, CL, CN, CO, CR, CU, CV, CZ, DE, DJ, DK, DM, DO, DZ, EC, EE, EG, ES, FI, GB, GD, GE, GH, GM, GT, HN, HR, HU, ID, IL, IN, IQ, IR, IS, IT, JM, JO, JP, KE, KG, KH, KN, KP, KR, KW, KZ, LA, LC, LK, LR, LS, LU, LY, MA, MD, MG, MK, MN, MU, MW, MX, MY, MZ, NA, NG, NI, NO, NZ, OM, PA, PE, PG, PH, PL, PT, QA, RO, RS, RU, RW, SA, SC, SD, SE, SG, SK, SL, ST, SV, SY, TH, TJ, TM, TN, TR, TT, TZ, UA, UG, US, UZ, VC, VN, WS, ZA, ZM, ZW.

(54) Title: FEC BASED DISCARD

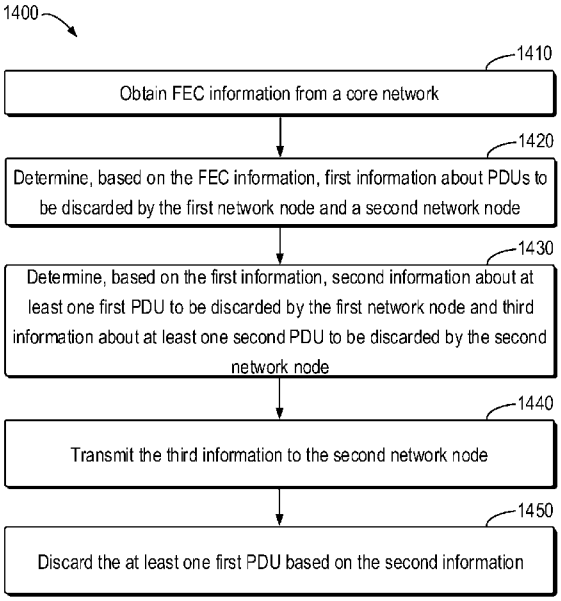

Fig. 14

(57) Abstract: Various aspects of the present disclosure relate to DL FEC based discard. In one aspect, a first network node obtains FEC information from a core network. Then, the first network node determines, based on the FEC information, first information about PDUs to be discarded by the first network node and a second network node. Then, the first network node determines, based on the first information, second information about at least one first PDU to be discarded by the first network node and third information about at least one second PDU to be discarded by the second network node. Then, the first network node transmit the third information to the second network node. In turn, the first network node discard the at least one first PDU based on the second information.

WO 2024/234751 A1

[Continued on next page]

(84) Designated States *(unless otherwise indicated, for every kind of regional protection available)*: ARIPO (BW, CV, GH, GM, KE, LR, LS, MW, MZ, NA, RW, SC, SD, SL, ST, SZ, TZ, UG, ZM, ZW), Eurasian (AM, AZ, BY, KG, KZ, RU, TJ, TM), European (AL, AT, BE, BG, CH, CY, CZ, DE, DK, EE, ES, FI, FR, GB, GR, HR, HU, IE, IS, IT, LT, LU, LV, MC, ME, MK, MT, NL, NO, PL, PT, RO, RS, SE, SI, SK, SM, TR), OAPI (BF, BJ, CF, CG, CI, CM, GA, GN, GQ, GW, KM, ML, MR, NE, SN, TD, TG).

Published:

— *with international search report (Art. 21(3))*

— *before the expiration of the time limit for amending the claims and to be republished in the event of receipt of amendments (Rule 48.2(h))*

— *upon request of the applicant, before the expiration of the time limit referred to in Article 21(2)(a)*

FEC BASED DISCARD

TECHNICAL FIELD

[0001] The present disclosure relates to wireless communications, and more specifically to network nodes and methods for supporting downlink (DL) forward error correction (FEC) based discard.

BACKGROUND

[0002] A wireless communications system may include one or multiple network communication devices, such as base stations, which may be otherwise known as an eNodeB (eNB), a next-generation NodeB (gNB), or other suitable terminology. Each network communication devices, such as a base station may support wireless communications for one or multiple user communication devices, which may be otherwise known as UE, or other suitable terminology. The wireless communications system may support wireless communications with one or multiple user communication devices by utilizing resources of the wireless communication system (e.g., time resources (e.g., symbols, slots, subframes, frames, or the like) or frequency resources (e.g., subcarriers, carriers)). Additionally, the wireless communications system may support wireless communications across various radio access technologies including third generation (3G) radio access technology, fourth generation (4G) radio access technology, fifth generation (5G) radio access technology, among other suitable radio access technologies beyond 5G (e.g., sixth generation (6G)).

[0003] For extended reality (XR) and media traffic, a concept of a protocol data unit (PDU) set is introduced. A PDU set may comprise one or more PDUs carrying a payload of one unit of information generated at an application level. For example, the unit of information may be a frame or video slice for XR services. All the PDUs of a PDU set are transmitted within the same quality of service (QoS) flow.

[0004] Application layer FEC may be used in multicast applications, broadcast applications or conversational applications. If the application layer FEC is applied, some PDUs in a PDU set may be redundant. Even though some PDUs are lost, the application layer can still recover the whole PDU set. In the case of congestion, proactive discard is useful to alleviate the congestion. For example, a network node can discard some of the redundant PDUs in the PDU set to alleviate the congestion by achieving a well trade-off

between the congestion alleviation and service experience. Therefore, there is a need to study FEC based discard for DL data transmission.

SUMMARY

[0005] The present disclosure relates to network nodes and methods that support DL FEC based discard. With the network nodes and methods, coordination between network nodes on FEC based discard may be achieved so as to avoid exceeding the allowed discard ratio. Thus, a UE can decode PDUs in a PDU set correctly.

[0006] Some implementations of a first network node described herein may comprise: at least one memory and at least one processor coupled with the at least one memory and configured to cause the first network node to: obtain FEC information from a core network; determine, based on the FEC information, first information about PDUs to be discarded by the first network node and a second network node; and determine, based on the first information, second information about at least one first PDU to be discarded by the first network node and third information about at least one second PDU to be discarded by the second network node; transmit the third information to the second network node; and discard the at least one first PDU based on the second information.

[0007] In some implementations, the FEC information comprises first FEC information about a quality of service (QoS) flow, and the first FEC information comprises at least one of the following: an indication indicating whether FEC is to be applied to the QoS flow, an FEC encoding type which is to be applied to the QoS flow, a redundant ratio for the QoS flow, or a first identifier of the QoS flow.

[0008] In some implementations, the FEC information comprises second FEC information about at least one PDU set, each of the at least one PDU set is associated with a block of source data, and the second FEC information comprises at least one of the following: a first indication indicating whether FEC is to be applied to the at least one PDU set, an FEC encoding type which is to be applied to each of the at least one PDU set, a first number of PDUs in each of the at least one PDU set which carry source symbols of the block, a second number of PDUs in each of the at least one PDU set which carry repair symbols of the block, or a total number of the source symbols and the repair symbols of the block, a size of each of the source symbols and the repair symbols, a last symbol among the source symbols which comprises padding bits, a second indication of

one of the source symbols which comprises padding bits, an FEC payload identifier (ID) of each of the source symbols and the repair symbols of the block, or a sequence number of each of the at least one PDU set.

[0009] In some implementations, the FEC information comprises third FEC information about at least one PDU set with at least one protocol data unit set importance (PSI) value within a quality of service (QoS) flow, wherein each of the at least one PDU set with the at least one PSI value is associated with a block of source data, and the third FEC information comprises at least one of the following: an indication indicating whether FEC is to be applied to the at least one PDU set with the at least one PSI value, an FEC encoding type which is to be applied to each of the at least one PDU set with the at least one PSI value, or a redundant ratio for the at least one PDU set with the at least one PSI value.

[0010] In some implementations, the first network node is caused to obtain the FEC information by: obtain a PDU session resource setup request message or a PDU session resource modify request message, wherein the PDU session resource setup request message or the PDU session resource modify request message comprises the FEC information.

[0011] In some implementations, the first information comprises a total discard ratio related to both the first network node and the second network node; the second information comprises a first discard ratio related to the first network node; and the third information comprises a second discard ratio related to the second network node.

[0012] In some implementations, the total discard ratio is equal to a percentage of PDUs which are to be discarded or which are allowed to be discarded by the first network node and the second network node, the PDUs are to be transmitted to a user equipment (UE) by the first network node and the second network node; the first discard ratio is equal to a first percentage of a first plurality of PDUs which are to be discarded or which are allowed to be discarded by the first network node, the first plurality of PDUs are to be transmitted to the UE by the first network node; and the second discard ratio is equal to a second percentage of a second plurality of PDUs which are to be discarded or which are allowed to be discarded by the second network node, wherein the second plurality of PDUs are to be transmitted to the UE by the second network node.

[0013] In some implementations, each of the total discard ratio, the first discard ratio and the second discard ratio is for one of the following to which FEC is to be applied: a quality of service (QoS) flow, a DRB to which the QoS flow is mapped, at least one protocol data unit set importance (PSI) value, or at least one PDU set.

[0014] In some implementations, only the QoS flow is mapped to a DRB; and the first network node is further caused to: determine a total discard ratio for the DRB as the total discard ratio for the QoS flow.

[0015] In some implementations, multiple QoS flows are mapped to a DRB, and the multiple QoS flows comprises the QoS flow; and the first network node is further caused to: determine a total discard ratio for the DRB based on an average of total discard ratios for the multiple QoS flows.

[0016] In some implementations, the first discard ratio related to the first network node is for the DRB, and the second discard ratio related to the second network node is for the DRB.

[0017] In some implementations, the first information comprises a maximum discard ratio related to both the first network node and the second network node.

[0018] In some implementations, the maximum discard ratio is equal to a maximum percentage of PDUs which are to be discarded or which are allowed to be discarded by the first network node and the second network node, the PDUs are to be transmitted to a user equipment (UE) by the first network node and the second network node.

[0019] In some implementations, the first information comprises a minimum discard ratio related to both the first network node and the second network node.

[0020] In some implementations, the minimum discard ratio is equal to a minimum percentage of PDUs which are to be discarded or which are allowed to be discarded by the first network node and the second network node, the PDUs are to be transmitted to a user equipment (UE) by the first network node and the second network node.

[0021] In some implementations, the first information comprises a total number of PDUs in a PDU set to be discarded by the first network node and the second network node; the second information comprises a third number of PDUs in the PDU set to be

discarded by the first network node; and the third information comprises a fourth number of PDUs in the PDU set to be discarded by the second network node.

[0022] In some implementations, the first network node comprises a master node of a user equipment (UE) and the second network node comprises a secondary node of the UE.

[0023] In some implementations, the first network node comprises a central unit (CU) of a gNodeB (gNB) and the second network node comprises a distributed unit (DU) of the gNB.

[0024] Some implementations of a first network node described herein may comprise: at least one memory; and at least one processor coupled with the at least one memory and configured to cause the first network node to: transmit, to a second network node, a first indication indicating that forward error correction (FEC) based discard is to be performed by the first network node; receive, from the second network node, assistance information about the FEC based discard; and perform the FEC based discard based on the assistance information.

[0025] In some implementations, the first indication indicates that the FEC based discard is to be performed for one of the following: a quality of service (QoS) flow, a data radio bearer (DRB) to which the QoS flow is mapped, a protocol data unit set importance (PSI) value, or a PDU set.

[0026] In some implementations, the first indication further indicates to request the assistance information about the FEC based discard.

[0027] In some implementations, the first indication further indicates to request the assistance information about the FEC based discard for one of the following: a quality of service (QoS) flow, a data radio bearer (DRB) to which the QoS flow is mapped, a protocol data unit set importance (PSI) value, or a PDU set.

[0028] In some implementations, the first network node is further caused to transmit at least one of the following to the second network node: a periodicity for providing the assistance information about the FEC based discard from the second network node, or an event for providing the assistance information about the FEC based discard from the second network node.

[0029] In some implementations, the event for providing the assistance information about the FEC based discard from the second network node comprises one of the following: a first threshold for a congestion level of the second network node, or a second threshold for a congestion percentage of the second network node.

[0030] In some implementations, the first network node is caused to transmit the first indication by transmitting one of the following comprising the first indication: an S-NODE addition request message, an S-NODE modification request message, an F1AP UE context setup request message, or an F1AP UE context modification request message.

[0031] In some implementations, the assistance information about the FEC based discard comprises at least one of the following: a discard ratio for the PDUs which are to transmitted to a user equipment (UE) by the second network node, a maximum discard ratio for the PDUs which are to transmitted to the UE by the second network node, a first number of protocol data units (PDUs) to be discarded for a PDU set which is to transmitted to a user equipment (UE) by the second network node, a maximum number of PDUs to be discarded for the PDU set, or a congestion level of the second network node.

[0032] In some implementations, the assistance information about the FEC based discard is for one of the following: a quality of service (QoS) flow, or a data radio bearer (DRB) to which the QoS flow is mapped.

[0033] In some implementations, the assistance information about the FEC based discard is for at least one first protocol data unit (PDU) set with a protocol data unit set importance (PSI) value.

[0034] In some implementations, the first network node is further caused to: transmit the PSI value to the second network node.

[0035] In some implementations, the assistance information about the FEC based discard comprises the PSI value.

[0036] In some implementations, the assistance information about the FEC based discard is for at least one second PDU set.

[0037] In some implementations, the first network node is further caused to: transmit, to the second network node, at least one sequence number (SN) of the at least one second PDU set.

[0038] In some implementations, the assistance information about the FEC based discard comprises at least one sequence number (SN) of the at least one second PDU set.

[0039] In some implementations, the first network node is caused to receive the assistance information about the FEC based discard by receiving one of the following comprising the assistance information: an S-NODE modification required message, an S-NODE addition acknowledge message, an F1AP UE context setup response message, an F1AP UE context modification response message, a radio access network (RAN) container of a general packet radio service (GPRS) tunnel protocol-user plane (GTP-U) extension header, or a PDU set container of the GTP-U extension header.

[0040] In some implementations, the first network node is further caused to: obtain FEC information from a core network; and transmit the FEC information to the second network node.

[0041] In some implementations, the first network node comprises a master node of a user equipment (UE) and the second network node comprises a secondary node of the UE.

[0042] In some implementations, the first network node comprises a central unit (CU) of a gNodeB (gNB) and the second network node comprises a distributed unit (DU) of the gNB.

[0043] Some implementations of a first network node described herein may comprise: at least one memory; and at least one processor coupled with the at least one memory and configured to cause the first network node to: obtain forward error correction (FEC) information from a core network before handover of a user equipment (UE) from the first network node to a second network node; perform handover of the UE to the second network node; and transmit, to the second network node, status information about the FEC based discard for a PDU set, wherein at least part of PDUs in the PDU set is to be forwarded to the second network node.

[0044] In some implementations, the status information about the FEC based discard for the PDU set comprises at least one of the following: an indication indicating whether

the FEC based discard has been performed for the PDU set by the first network node, a percentage of PDUs in the PDU set which have been discarded by the first network node, the number of the PDUs in the PDU set which have been discarded by the first network node.

[0045] In some implementations, the first network node is caused to transmit the status information about the FEC based discard for the PDU set by transmitting one of the following comprising the status information: a handover request message, a secondary node (SN) status transfer message, a radio access network (RAN) container of a general packet radio service (GPRS) tunnel protocol-user plane (GTP-U) extension header, or a PDU set container of the GTP-U extension header.

[0046] Some implementations of a second network node described herein may comprise: at least one memory; and at least one processor coupled with the at least one memory and configured to cause the second network node to: receive, from a first network node, third information about at least one second protocol data unit (PDU) to be discarded by the second network node; and discard the at least one first PDU based on the third information.

[0047] In some implementations, the third information comprises a second discard ratio related to the second network node.

[0048] In some implementations, the second discard ratio is equal to a second percentage of a second plurality of PDUs which are to be discarded or which are allowed to be discarded by the second network node, wherein the second plurality of PDUs are to be transmitted to the UE by the second network node.

[0049] In some implementations, the second discard ratio is for one of the following to which forward error correction (FEC) is to be applied: a quality of service (QoS) flow, at least one protocol data unit set importance (PSI) value, or at least one PDU set.

[0050] In some implementations, the third information comprises a fourth number of PDUs in a PDU set to be discarded by the second network node.

[0051] In some implementations, the first network node comprises a master node of a user equipment (UE) and the second network node comprises a secondary node of the UE.

[0052] In some implementations, the first network node comprises a central unit (CU) of a gNodeB (gNB) and the second network node comprises a distributed unit (DU) of the gNB.

[0053] Some implementations of a second network node described herein may comprise: at least one memory; and at least one processor coupled with the at least one memory and configured to cause the second network node to: receive, from a first network node, a first indication indicating that forward error correction (FEC) based discard is to be performed by the first network node; and transmit, to the first network node, assistance information about the FEC based discard.

[0054] In some implementations, the first indication indicates that the FEC based discard is to be performed for one of the following: a quality of service (QoS) flow, a data radio bearer (DRB) to which the QoS flow is mapped, a protocol data unit set importance (PSI) value, or a PDU set.

[0055] In some implementations, the first indication further indicates to request the assistance information about the FEC based discard.

[0056] In some implementations, the first indication further indicates to request the assistance information about the FEC based discard for one of the following: a quality of service (QoS) flow, a data radio bearer (DRB) to which the QoS flow is mapped, a protocol data unit set importance (PSI) value, or a PDU set.

[0057] In some implementations, the second network node is further caused to receive at least one of the following from the first network node: a periodicity for providing the assistance information about the FEC based discard from the second network node, or an event for providing the assistance information about the FEC based discard from the second network node.

[0058] In some implementations, the event for providing the assistance information about the FEC based discard from the second network node comprises one of the following: a first threshold for a congestion level of the second network node, or a second threshold for a congestion percentage of the second network node.

[0059] In some implementations, the second network node is caused to receive the first indication by receiving one of the following comprising the first indication: an S-

NODE addition request message, an S-NODE modification request message, an F1AP UE context setup request message, or an F1AP UE context modification request message.

[0060] In some implementations, the assistance information about the FEC based discard comprises at least one of the following: a discard ratio for the PDUs which are to transmitted to a user equipment (UE) by the second network node, a maximum discard ratio for the PDUs which are to transmitted to the UE by the second network node, a first number of protocol data units (PDUs) to be discarded for a PDU set which is to transmitted to a user equipment (UE) by the second network node, a maximum number of PDUs to be discarded for the PDU set, or a congestion level of the second network node.

[0061] In some implementations, the assistance information about the FEC based discard is for one of the following: a quality of service (QoS) flow, or a data radio bearer (DRB) to which the QoS flow is mapped.

[0062] In some implementations, the assistance information about the FEC based discard is for at least one first protocol data unit (PDU) set with a protocol data unit set importance (PSI) value.

[0063] In some implementations, the second network node is further caused to: receive the PSI value to from the first network node.

[0064] In some implementations, the assistance information about the FEC based discard comprises the PSI value.

[0065] In some implementations, the assistance information about the FEC based discard is for at least one second PDU set.

[0066] In some implementations, the second network node is further caused to: receive, from the first network node, at least one sequence number (SN) of the at least one second PDU set.

[0067] In some implementations, the assistance information about the FEC based discard comprises at least one sequence number (SN) of the at least one second PDU set.

[0068] In some implementations, the second network node is caused to transmit the assistance information about the FEC based discard by transmitting one of the following comprising the assistance information: an S-NODE modification required message, an S-

NODE addition acknowledge message, an F1AP UE context setup response message, an F1AP UE context modification response message, a radio access network (RAN) container of a general packet radio service (GPRS) tunnel protocol-user plane (GTP-U) extension header, or a PDU set container of the GTP-U extension header.

[0069] In some implementations, the second network node is further caused to: receive FEC information from the first network node.

[0070] In some implementations, the first network node comprises a master node of a user equipment (UE) and the second network node comprises a secondary node of the UE.

[0071] In some implementations, the first network node comprises a central unit (CU) of a gNodeB (gNB) and the second network node comprises a distributed unit (DU) of the gNB.

[0072] Some implementations of a second network node described herein may comprise: at least one memory; and at least one processor coupled with the at least one memory and configured to cause the second network node to: perform handover of a user equipment (UE) from a first network node to the second network node; and receive, from the first network node, status information about forward error correction (FEC) based discard for a PDU set, wherein at least part of PDUs in the PDU set is to be forwarded to the second network node.

[0073] In some implementations, the status information about the FEC based discard for the PDU set comprises at least one of the following: an indication indicating whether the FEC based discard has been performed for the PDU set by the first network node, a percentage of PDUs in the PDU set which have been discarded by the first network node, the number of the PDUs in the PDU set which have been discarded by the first network node.

[0074] In some implementations, the second network node is caused to receive the status information about the FEC based discard for the PDU set by receiving one of the following comprising the status information: a handover request message, a secondary node (SN) status transfer message, a radio access network (RAN) container of a general packet radio service (GPRS) tunnel protocol-user plane (GTP-U) extension header, or a PDU set container of the GTP-U extension header.

[0075] Some implementations of a method described herein may include: obtaining FEC information from a core network; determining, based on the FEC information, first information about PDUs to be discarded by the first network node and a second network node; and determining, based on the first information, second information about at least one first PDU to be discarded by the first network node and third information about at least one second PDU to be discarded by the second network node; transmitting the third information to the second network node; and discarding the at least one first PDU based on the second information.

[0076] Some implementations of a method described herein may include: transmitting, to a second network node, a first indication indicating that FEC based discard is to be performed by the first network node; receiving, from the second network node, assistance information about the FEC based discard; and performing the FEC based discard based on the assistance information.

[0077] Some implementations of a method described herein may include: obtaining FEC information from a core network before handover of a UE from the first network node to a second network node; performing handover of the UE to the second network node; and transmitting, to the second network node, status information about the FEC based discard for a PDU set, wherein at least part of PDUs in the PDU set is to be forwarded to the second network node.

[0078] Some implementations of a method described herein may include: receiving, from a first network node, third information about at least one second PDU to be discarded by the second network node; and discarding the at least one first PDU based on the third information.

[0079] Some implementations of a method described herein may include: receiving, from a first network node, a first indication indicating that FEC based discard is to be performed by the first network node; and transmitting, to the first network node, assistance information about the FEC based discard.

[0080] Some implementations of a method described herein may include: performing handover of a UE from a first network node to the second network node; and receiving, from the first network node, status information about FEC based discard for a PDU set,

wherein at least part of PDUs in the PDU set is to be forwarded to the second network node.

[0081] It is to be understood that the summary section is not intended to identify key or essential features of embodiments of the present disclosure, nor is it intended to be used to limit the scope of the present disclosure. Other features of the present disclosure will become easily comprehensible through the following description.

BRIEF DESCRIPTION OF THE DRAWINGS

[0082] Fig. 1 illustrates an example of a wireless communications system that supports DL FEC based discard in accordance with aspects of the present disclosure;

[0083] Figs. 2A and 2B illustrate an example of a wireless communications system that supports DL FEC based discard in accordance with aspects of the present disclosure, respectively;

[0084] Fig. 3 illustrates a signaling diagram illustrating an example process that supports DL FEC based discard in accordance with aspects of the present disclosure;

[0085] Fig. 4 illustrates a signaling diagram illustrating an example process that supports DL FEC based discard in accordance with some implementations of the present disclosure;

[0086] Fig. 5 illustrates a signaling diagram illustrating an example process that supports DL FEC based discard in accordance with aspects of the present disclosure;

[0087] Fig. 6 illustrates an example of a block of source data in accordance with some implementations of the present disclosure;

[0088] Figs. 7 to 12 illustrate a signaling diagram illustrating an example process that supports DL FEC based discard in accordance with aspects of the present disclosure, respectively;

[0089] Fig. 13 illustrates an example of a device that supports DL FEC based discard in accordance with some aspects of the present disclosure; and

[0090] Figs. 14 and 19 illustrate a flowchart of a method that supports DL FEC based discard in accordance with aspects of the present disclosure, respectively.

DETAILED DESCRIPTION

[0091] Principles of the present disclosure will now be described with reference to some embodiments. It is to be understood that these embodiments are described only for the purpose of illustration and help those skilled in the art to understand and implement the present disclosure, without suggesting any limitation as to the scope of the disclosure. The disclosure described herein may be implemented in various manners other than the ones described less than or equal to.

[0092] In the following description and claims, unless defined otherwise, all technical and scientific terms used herein have the same meaning as commonly understood by one of ordinary skills in the art to which this disclosure belongs.

[0093] References in the present disclosure to "one embodiment," "an example embodiment," "an embodiment," "some embodiments," and the like indicate that the embodiment(s) described may include a particular feature, structure, or characteristic, but it is not necessary that every embodiment includes the particular feature, structure, or characteristic. Moreover, such phrases do not necessarily refer to the same embodiment(s). Further, when a particular feature, structure, or characteristic is described in connection with an embodiment, it is submitted that it is within the knowledge of one skilled in the art to affect such feature, structure, or characteristic in connection with other embodiments whether or not explicitly described.

[0094] It shall be understood that although the terms "first" and "second" or the like may be used herein to describe various elements, these elements should not be limited by these terms. These terms are only used to distinguish one element from another element. For example, a first element could also be termed as a second element, and similarly, a second element could also be termed as a first element, without departing from the scope of embodiments. As used herein, the term "and/or" includes any and all combinations of one or more of the listed terms.

[0095] The terminology used herein is for the purpose of describing particular embodiments only and is not intended to be limiting of example embodiments. As used herein, the singular forms "a", "an" and "the" are intended to include the plural forms as well, unless the context clearly indicates otherwise. It will be further understood that the terms "comprises", "comprising", "has", "having", "includes" and/or "including", when used herein, specify the presence of stated features, elements, and/or components etc., but

do not preclude the presence or addition of one or more other features, elements, components and/ or combinations thereof.

[0096] As described above, if the application layer FEC is applied, some PDUs in a PDU set may be redundant. Even though some PDUs are lost, the application layer can still recover the whole PDU set. A network node can discard some of the redundant PDUs in the PDU set to alleviate the congestion.

[0097] For DL data transmission, there is a need for necessary coordination between network nodes on the FEC based discard to avoid exceeding the allowed discard ratio otherwise a UE can not decode packets correctly.

[0098] In Multi-RAT Dual Connectivity (MR-DC) and NR-DC, a radio bearer may be served by both a master node (MN) and a secondary node (SN). For example, for a split bearer, a PDU set can be transmitted to a UE by both MCG and SCG. In this case, both MN and SN can discard partial PDUs in the PDU set to alleviate their own congestion status. Without coordination between MN and SN, it is difficult for MN or SN to decide how many PDUs can be discarded.

[0099] In CU-DU split scenario, a gNB-CU may perform the FEC based discard. Since the gNB-CU does not know the congestion status in gNB-DU, the gNB-CU is not able to decides how many PDUs can be discarded for a PDU set.

[0100] If both gNB-CU and gNB-DU are allowed to perform the FEC based discard, there is a need for necessary coordination between gNB-CU and gNB-DU on the FEC based discard to avoid exceeding the allowed discard ratio.

[0101] In case of handover, data forwarding may be performed. For a PDU set that is to be forwarded from a source gNB to a target gNB, some PDUs may have been discarded in the source gNB. In this case, the source gNB needs to transmit the discard status to the target gNB so as to avoid the target gNB to discard PDUs that cause exceeding the allowed discard ratio.

[0102] In view of the above, the present disclosure provides a solution that supports DL FEC based discard. In this solution, a first network node obtains FEC information from a core network. Then, the first network node determines, based on the FEC information, first information about PDUs to be discarded by the first network node and a second network node. The first network node determines, based on the first information,

second information about at least one first PDU to be discarded by the first network node and third information about at least one second PDU to be discarded by the second network node. After that, the first network node transmits the third information to the second network node. In turn, the first network node discards the at least one first PDU based on the second information. The solution may alleviate congestion while ensuring service experience.

[0103] Aspects of the present disclosure are described in the context of a wireless communications system.

[0104] Fig. 1 illustrates an example of a wireless communications system 100 that supports DL FEC based discard in accordance with aspects of the present disclosure. The wireless communications system 100 may include one at least one of network entities 102 (also referred to as network equipment (NE)), one or more terminal devices or UEs 104, a core network 106, and a packet data network 108. The wireless communications system 100 may support various radio access technologies. In some implementations, the wireless communications system 100 may be a 4G network, such as an LTE network or an LTE-advanced (LTE-A) network. In some other implementations, the wireless communications system 100 may be a 5G network, such as an NR network. In other implementations, the wireless communications system 100 may be a combination of a 4G network and a 5G network, or other suitable radio access technology including institute of electrical and electronics engineers (IEEE) 802.11 (Wi-Fi), IEEE 802.16 (WiMAX), IEEE 802.20. The wireless communications system 100 may support radio access technologies beyond 5G. Additionally, the wireless communications system 100 may support technologies, such as time division multiple access (TDMA), frequency division multiple access (FDMA), or code division multiple access (CDMA), etc.

[0105] The network entities 102 may be dispersed throughout a geographic region to form the wireless communications system 100. One or more of the network entities 102 described herein may be or include or may be referred to as a network node, a base station (BS), a network element, a radio access network (RAN) node, a base transceiver station, an access point, a NodeB, an eNodeB (eNB), a next-generation NodeB (gNB), or other suitable terminology. A network entity 102 and a UE 104 may communicate via a communication link 110, which may be a wireless or wired connection. For example, a network entity 102 and a UE 104 may perform wireless communication (e.g., receive

signaling, transmit signaling) over a Uu interface. The network entities 102 may be collectively referred to as network entities 102 or individually referred to as a network entity 102. Hereinafter, some implementations of the present disclosure will be described by taking a gNB as an example of the network entity 102. Thus, the network entity 102 may be used interchangeably with the gNB 102. For example, the gNBs 102 may comprise a gNB 102-1 and a gNB 102-2, as shown in Fig. 1.

[0106] In some implementations, the gNB 102 may support dual connectivity (DC) operation. For example, the gNB 102-1 may act as a master RAN node and the gNB 102-2 may act as a secondary RAN node. Hereinafter, for brevity, a master RAN node is also referred to as a master node (MN) and a secondary RAN node is also referred to as a secondary node (SN).

[0107] In some implementations, in NR-DC, a radio bearer may be served by both MN and SN. For example, for a split bearer, a PDU set can be transmitted to the UE 104 by both MCG and SCG. In this case, both MN and SN can discard partial PDUs in the PDU set to alleviate their own congestion status. Without coordination, it is difficult for MN or SN to decide how many packets can be discarded.

[0108] In some implementations, master cell group (MCG) may be a group of serving cells associated with the Master RAN Node, comprising a Special Cell (SpCell) which is known as a Primary Cell (PCell) and optionally one or more Secondary Cells (SCells).

[0109] In some implementations, for a UE 104 configured with dual connectivity, SCG may be a subset of serving cells comprising a Primary Secondary Cell (PSCell) and zero or more SCells.

[0110] A network entity 102 may provide a geographic coverage area 112 for which the network entity 102 may support services (e.g., voice, video, packet data, messaging, broadcast, etc.) for one or more UEs 104 within the geographic coverage area 112. For example, a network entity 102 and a UE 104 may support wireless communication of signals related to services (e.g., voice, video, packet data, messaging, broadcast, etc.) according to one or multiple radio access technologies. In some implementations, a network entity 102 may be moveable, for example, a satellite associated with a non-terrestrial network. In some implementations, different geographic coverage areas 112 associated with the same or different radio access technologies may overlap, but the

different geographic coverage areas 112 may be associated with different network entities 102. Information and signals described herein may be represented using any of a variety of different technologies and techniques. For example, data, instructions, commands, information, signals, bits, symbols, and chips that may be referenced throughout the description may be represented by voltages, currents, electromagnetic waves, magnetic fields or particles, optical fields or particles, or any combination thereof.

[0111] The one or more UEs 104 may be dispersed throughout a geographic region of the wireless communications system 100. A UE 104 may include or may be referred to as a mobile device, a wireless device, a remote device, a remote unit, a handheld device, or a subscriber device, or some other suitable terminology. In some implementations, the UE 104 may be referred to as a unit, a station, a terminal, or a client, among other examples. Additionally, or alternatively, the UE 104 may be referred to as an internet-of-things (IoT) device, an internet-of-everything (IoE) device, or machine-type communication (MTC) device, among other examples. In some implementations, a UE 104 may be stationary in the wireless communications system 100. In some other implementations, a UE 104 may be mobile in the wireless communications system 100.

[0112] The one or more UEs 104 may be devices in different forms or having different capabilities. Some examples of UEs 104 are illustrated in Fig. 1. A UE 104 may be capable of communicating with various types of devices, such as the network entities 102, other UEs 104, or network equipment (e.g., the core network 106, the packet data network 108, a relay device, an integrated access and backhaul (IAB) node, or another network equipment), as shown in Fig. 1. Additionally, or alternatively, a UE 104 may support communication with other network entities 102 or UEs 104, which may act as relays in the wireless communications system 100.

[0113] A UE 104 may also be able to support wireless communication directly with other UEs 104 over a communication link 114. For example, a UE 104 may support wireless communication directly with another UE 104 over a device-to-device (D2D) communication link. In some implementations, such as vehicle-to-vehicle (V2V) deployments, vehicle-to-everything (V2X) deployments, or cellular-V2X deployments, the communication link 114 may be referred to as a sidelink. For example, a UE 104 may support wireless communication directly with another UE 104 over a PC5 interface.

[0114] A network entity 102 may support communications with the core network 106, or with another network entity 102, or both. For example, a network entity 102 may interface with the core network 106 through one or more backhaul links 116 (e.g., via an S1, N2, N2, or another network interface). The network entities 102 may communicate with each other over the backhaul links 116 (e.g., via an X2, Xn, or another network interface). In some implementations, the network entities 102 may communicate with each other directly (e.g., between the network entities 102). In some other implementations, the network entities 102 may communicate with each other or indirectly (e.g., via the core network 106). In some implementations, one or more network entities 102 may include subcomponents, such as an access network entity, which may be an example of an access node controller (ANC). An ANC may communicate with the one or more UEs 104 through one or more other access network transmission entities, which may be referred to as a radio heads, smart radio heads, or transmission-reception points (TRPs).

[0115] In some implementations, a network entity 102 may be configured in a disaggregated architecture, which may be configured to utilize a protocol stack physically or logically distributed among two or more network entities 102, such as an integrated access backhaul (IAB) network, an open radio access network (O-RAN) (e.g., a network configuration sponsored by the O-RAN Alliance), or a virtualized RAN (vRAN) (e.g., a cloud RAN (C-RAN)). For example, a network entity 102 may include one or more of a central unit (CU), a distributed unit (DU), a radio unit (RU), a RAN intelligent controller (RIC) (e.g., a near-real time RIC (Near-RT RIC), a non-real time RIC (Non-RT RIC)), a service management and orchestration (SMO) system, or any combination thereof.

[0116] An RU may also be referred to as a radio head, a smart radio head, a remote radio head (RRH), a remote radio unit (RRU), or a transmission reception point (TRP). One or more components of the network entities 102 in a disaggregated RAN architecture may be co-located, or one or more components of the network entities 102 may be located in distributed locations (e.g., separate physical locations). In some implementations, one or more network entities 102 of a disaggregated RAN architecture may be implemented as virtual units (e.g., a virtual CU (VCU), a virtual DU (VDU), a virtual RU (VRU)).

[0117] Split of functionality between a CU, a DU, and an RU may be flexible and may support different functionalities depending upon which functions (e.g., network layer

functions, protocol layer functions, baseband functions, radio frequency functions, and any combinations thereof) are performed at a CU, a DU, or an RU. For example, a functional split of a protocol stack may be employed between a CU and a DU such that the CU may support one or more layers of the protocol stack and the DU may support one or more different layers of the protocol stack. In some implementations, the CU may host upper protocol layer (e.g., a layer 3 (L3), a layer 2 (L2)) functionality and signaling (e.g., radio resource control (RRC), service data adaption protocol (SDAP), packet data convergence protocol (PDCP)). The CU may be connected to one or more DUs or RUs, and the one or more DUs or RUs may host lower protocol layers, such as a layer 1 (L1) (e.g., physical (PHY) layer) or an L2 (e.g., radio link control (RLC) layer, medium access control (MAC) layer) functionality and signaling, and may each be at least partially controlled by the CU 160.

[0118] Additionally, or alternatively, a functional split of the protocol stack may be employed between a DU and an RU such that the DU may support one or more layers of the protocol stack and the RU may support one or more different layers of the protocol stack. The DU may support one or multiple different cells (e.g., via one or more RUs). In some implementations, a functional split between a CU and a DU, or between a DU and an RU may be within a protocol layer (e.g., some functions for a protocol layer may be performed by one of a CU, a DU, or an RU, while other functions of the protocol layer are performed by a different one of the CU, the DU, or the RU).

[0119] A CU may be functionally split further into CU control plane (CU-CP) and CU user plane (CU-UP) functions. A CU may be connected to one or more DUs via a midhaul communication link (e.g., F1, F1-c, F1-u), and a DU may be connected to one or more RUs via a fronthaul communication link (e.g., open fronthaul (FH) interface). In some implementations, a midhaul communication link or a fronthaul communication link may be implemented in accordance with an interface (e.g., a channel) between layers of a protocol stack supported by respective network entities 102 that are in communication via such communication links.

[0120] The core network 106 may support user authentication, access authorization, tracking, connectivity, and other access, routing, or mobility functions. The core network 106 may be an evolved packet core (EPC), or a 5G core (5GC), which may include a control plane entity that manages access and mobility (e.g., a mobility management entity

(MME), an access and mobility management functions (AMF), Session Management functions (SMF) and a user plane entity that routes packets or interconnects to external networks (e.g., a serving gateway (S-GW), a packet data network (PDN) gateway (P-GW), or a user plane function (UPF)). In some implementations, the control plane entity may manage non-access stratum (NAS) functions, such as mobility, authentication, and bearer management (e.g., data bearers, signal bearers, etc.) for the one or more UEs 104 served by the one or more network entities 102 associated with the core network 106.

[0121] The core network 106 may communicate with the packet data network 108 over one or more backhaul links 116 (e.g., via an S1, N2, N2, or another network interface). The packet data network 108 may include an application server 118. In some implementations, one or more UEs 104 may communicate with the application server 118. A UE 104 may establish a session (e.g., a protocol data unit (PDU) session, or the like) with the core network 106 via a network entity 102. The core network 106 may route traffic (e.g., control information, data, and the like) between the UE 104 and the application server 118 using the established session (e.g., the established PDU session). The PDU session may be an example of a logical connection between the UE 104 and the core network 106 (e.g., one or more network functions of the core network 106).

[0122] In the wireless communications system 100, the network entities 102 and the UEs 104 may use resources of the wireless communications system 100 (e.g., time resources (e.g., symbols, slots, subframes, frames, or the like) or frequency resources (e.g., subcarriers, carriers)) to perform various operations (e.g., wireless communications). In some implementations, the network entities 102 and the UEs 104 may support different resource structures. For example, the network entities 102 and the UEs 104 may support different frame structures. In some implementations, such as in 4G, the network entities 102 and the UEs 104 may support a single frame structure. In some other implementations, such as in 5G and among other suitable radio access technologies, the network entities 102 and the UEs 104 may support various frame structures (i.e., multiple frame structures). The network entities 102 and the UEs 104 may support various frame structures based on one or more numerologies.

[0123] One or more numerologies may be supported in the wireless communications system 100, and a numerology may include a subcarrier spacing and a cyclic prefix. A first numerology (e.g., μ=0) may be associated with a first subcarrier spacing (e.g., 15

kHz) and a normal cyclic prefix. In some implementations, the first numerology (e.g., μ=0) associated with the first subcarrier spacing (e.g., 15 kHz) may utilize one slot per subframe. A second numerology (e.g., μ=1) may be associated with a second subcarrier spacing (e.g., 30 kHz) and a normal cyclic prefix. A third numerology (e.g., μ=2) may be associated with a third subcarrier spacing (e.g., 60 kHz) and a normal cyclic prefix or an extended cyclic prefix. A fourth numerology (e.g., μ=3) may be associated with a fourth subcarrier spacing (e.g., 120 kHz) and a normal cyclic prefix. A fifth numerology (e.g., μ=4) may be associated with a fifth subcarrier spacing (e.g., 240 kHz) and a normal cyclic prefix.

[0124] A time interval of a resource (e.g., a communication resource) may be organized according to frames (also referred to as radio frames). Each frame may have a duration, for example, a 10 millisecond (ms) duration. In some implementations, each frame may include multiple subframes. For example, each frame may include 10 subframes, and each subframe may have a duration, for example, a 1 ms duration. In some implementations, each frame may have the same duration. In some implementations, each subframe of a frame may have the same duration.

[0125] Additionally or alternatively, a time interval of a resource (e.g., a communication resource) may be organized according to slots. For example, a subframe may include a number (e.g., quantity) of slots. The number of slots in each subframe may also depend on the one or more numerologies supported in the wireless communications system 100. For instance, the first, second, third, fourth, and fifth numerologies (i.e., μ=0, μ=1, μ=2, μ=3, μ=4) associated with respective subcarrier spacings of 15 kHz, 30 kHz, 60 kHz, 120 kHz, and 240 kHz may utilize a single slot per subframe, two slots per subframe, four slots per subframe, eight slots per subframe, and 16 slots per subframe, respectively. Each slot may include a number (e.g., quantity) of symbols (e.g., OFDM symbols). In some implementations, the number (e.g., quantity) of slots for a subframe may depend on a numerology. For a normal cyclic prefix, a slot may include 14 symbols. For an extended cyclic prefix (e.g., applicable for 60 kHz subcarrier spacing), a slot may include 12 symbols. The relationship between the number of symbols per slot, the number of slots per subframe, and the number of slots per frame for a normal cyclic prefix and an extended cyclic prefix may depend on a numerology. It should be understood that

reference to a first numerology (e.g., μ=0) associated with a first subcarrier spacing (e.g., 15 kHz) may be used interchangeably between subframes and slots.

[0126] In the wireless communications system 100, an electromagnetic (EM) spectrum may be split, based on frequency or wavelength, into various classes, frequency bands, frequency channels, etc. By way of example, the wireless communications system 100 may support one or multiple operating frequency bands, such as frequency range designations FR1 (510 MHz – 7.125 GHz), FR2 (24.25 GHz – 52.6 GHz), FR3 (7.125 GHz – 24.25 GHz), FR4 (52.6 GHz – 114.25 GHz), FR4a or FR4-1 (52.6 GHz – 71 GHz), and FR5 (114.25 GHz – 300 GHz). In some implementations, the network entities 102 and the UEs 104 may perform wireless communications over one or more of the operating frequency bands. In some implementations, FR1 may be used by the network entities 102 and the UEs 104, among other equipment or devices for cellular communications traffic (e.g., control information, data). In some implementations, FR2 may be used by the network entities 102 and the UEs 104, among other equipment or devices for short-range, high data rate capabilities.

[0127] FR1 may be associated with one or multiple numerologies (e.g., at least three numerologies). For example, FR1 may be associated with a first numerology (e.g., μ=0), which includes 15 kHz subcarrier spacing; a second numerology (e.g., μ=1), which includes 30 kHz subcarrier spacing; and a third numerology (e.g., μ=2), which includes 60 kHz subcarrier spacing. FR2 may be associated with one or multiple numerologies (e.g., at least 2 numerologies). For example, FR2 may be associated with a third numerology (e.g., μ=2), which includes 60 kHz subcarrier spacing; and a fourth numerology (e.g., μ=3), which includes 120 kHz subcarrier spacing.

[0128] Fig. 2A illustrates an example of a wireless communications system 200A that supports DL FEC based discard in accordance with aspects of the present disclosure. As shown in Fig. 2A, the wireless communications system 200A may comprise the core network 106 and the UE 104 in Fig. 1 as well as a first network node 210 and a second network node 220.

[0129] In some implementations, each of the first network node 210 and the second network node 220 may be implemented as one of the following: a gNB, a base station, a network element, a RAN node, a base transceiver station, an access point, a NodeB, or an eNB.

[0130] In some implementations, the UE 104 may be in dual connection (DC) with the first network node 210 and the second network node 220. In such implementations, the first network node 210 may be implemented as a node hosting PDCP entity, and the second network node 220 may be implemented as a peer node (also referred to as a corresponding node). In other words, a PDCP entity of a data radio bearer (DRB) may be terminated in the first network node 210, and the lower layers functionalities of the DRB are served by the second network node 220 or the lower layers functionalities of the DRB are served by both the first network node 210 and the second network node 220. For example, the DRB may be one of the following: MN terminated MCG bearer, MN terminated SCG bearer or MN terminated split bearer. The lower layers of the DRB may comprise an RLC entity, a MAC entity of the DRB and physical layer related function of the DRB.

[0131] In some implementations, the node hosting PDCP entity may be an MN, and the peer node may be an SN. Alternatively, the node hosting PDCP entity may be an SN and the peer node may be an MN.

[0132] Fig. 2B illustrates an example of a wireless communications system that supports DL FEC based discard in accordance with aspects of the present disclosure. As shown in Fig. 2B, the wireless communications system 200B may comprise the core network 106 and the UE 104 in Fig. 1 as well as the first network node 210 and the second network node 220.

[0133] In some implementations, the first network node 210 and the second network node 220 may be collectively implemented as the network entity 102 in Fig. 1. In such implementations, the first network node 210 and the second network node 220 may be collectively implemented as a gNB. For example, the first network node 210 may be implemented as a gNB-CU, and the second network node 220 may be implemented as a gNB-DU. The gNB-CU and the gNB-DU may be connected via F1 interface. In such implementations, the node hosting PDCP entity may be a gNB-CU having a PDCP entity of a DRB, and the peer node may be a gNB-DU having RLC, MAC entities of the DRB and physical layer related function of the DRB.

[0134] In some implementations, the gNB-CU may be a logical node hosting RRC, SDAP and PDCP protocols of the gNB or RRC and PDCP protocols of the en-gNB that

controls the operation of one or more gNB-DUs. The gNB-CU terminates the F1 interface connected with the gNB-DU.

[0135] In some implementations, the gNB-DU may be a logical node hosting RLC, MAC and PHY protocols of the gNB or en-gNB, and its operation is partly controlled by gNB-CU. One gNB-DU supports one or multiple cells. One cell is supported by only one gNB-DU. The gNB-DU terminates the F1 interface connected with the gNB-CU.

[0136] Fig. 3 illustrates a signaling diagram illustrating an example process 300 that supports DL FEC based discard in accordance with aspects of the present disclosure. The process 300 may involve the UE 104, the core network 106, the first network node 210 and the second network node 220 in Fig. 2A or 2B. For the purpose of discussion, the process 300 will be described with reference to Fig. 2A or 2B.

[0137] Generally, in the process 300, the first network node 210 may be implemented as an MN of the UE 104 and the second network node 220 may be implemented as an SN of the UE 104. Alternatively, the first network node 210 may be implemented as a CU of a gNB and the second network node 220 may be implemented as a DU of the gNB.

[0138] As shown in Fig. 3, the first network node 210 obtains 310 FEC information from the core network 106.

[0139] In some implementations, the first network node 210 may receive a PDU session resource setup request message from an access and mobility management functions (AMF) or a Session Management Function (SMF) in the core network 106. The PDU session resource setup request message may comprise the FEC information.

[0140] Alternatively, the first network node 210 may receive a PDU session resource modify request message from the AMF or the SMF in the core network 106. The PDU session resource modify request message may comprise the FEC information.

[0141] In some implementations, the FEC information may comprise first FEC information about a QoS flow, which will be described later with reference to Fig. 4 in detail.

[0142] Alternatively, the FEC information may comprise second FEC information about at least one PDU set, which will be described later with reference to Fig. 5 in detail.

[0143] Alternatively, the FEC information may comprise third FEC information about at least one PDU set with at least one PSI value within a QoS flow, which will be described later with reference to Fig. 7 in detail.

[0144] With continued reference to Fig. 3, the first network node 210 determines 320 first information about PDUs to be discarded by the first network node 210 and the second network node 220 based on the FEC information.

[0145] In some implementations, the first information may comprise a total discard ratio related to both the first network node 210 and the second network node 220. In such implementations, the total discard ratio may be equal to a percentage of PDUs which are to be discarded or which are allowed to be discarded by the first network node 210 and the second network node 220. The PDUs are to be transmitted to the UE 104 by the first network node 210 and the second network node 220.

[0146] Additionally, or alternatively, the first information may comprise a maximum discard ratio related to both the first network node 210 and the second network node 220. In such implementations, the maximum discard ratio may be equal to a maximum percentage of PDUs which are to be discarded or which are allowed to be discarded by the first network node 210 and the second network node 220. The PDUs are to be transmitted to the UE 104 by the first network node 210 and the second network node 220.

[0147] Additionally, or alternatively, the first information may comprise a minimum discard ratio related to both the first network node 210 and the second network node 220. In such implementations, the minimum discard ratio may be equal to a minimum percentage of PDUs which are to be discarded or which are allowed to be discarded by the first network node 210 and the second network node 220. The PDUs are to be transmitted to the UE 104 by the first network node 210 and the second network node 220.

[0148] Additionally, or alternatively, the first information may comprise a total number of PDUs in a PDU set to be discarded by the first network node 210 and the second network node 220.

[0149] Then, the first network node 210 determines 330 second information about at least one first PDU to be discarded by the first network node 210 and third information

about at least one second PDU to be discarded by the second network node 220 based on the first information.

[0150] In some implementations, if the first information comprises the total discard ratio related to both the first network node 210 and the second network node 220, the second information may comprise a first discard ratio related to the first network node 210 and the third information may comprise a second discard ratio related to the second network node 220.

[0151] In some implementations, the first discard ratio may be equal to a first percentage of a first plurality of PDUs which are to be discarded or which are allowed to be discarded by the first network node 210. The first plurality of PDUs are to be transmitted to the UE 104 by the first network node 210. For example, the number of the first plurality of PDUs are to be transmitted to the UE 104 by the first network node 210 is represented by Y1, and the first discard ratio is represented by X1%. For example, if Y1 is equal to 50, and X1% is equal to 40%, the first network node 210 may discard forty percent of the 50 PDUs in the PDU set. That is, the first network node 210 may discard 20 PDUs in the PDU set.

[0152] In some implementations, the second discard ratio may be equal to a second percentage of a second plurality of PDUs which are to be discarded or which are allowed to be discarded by the second network node 220. The second plurality of PDUs are to be transmitted to the UE 104 by the second network node 220. For example, the number of the second plurality of PDUs are to be transmitted to the UE 104 by the second network node 220 is represented by Y2, and the second discard ratio is represented by X2%. For example, if Y2 is equal to 50, and X2% is equal to 20%, the second network node 210 may discard twenty percent of the 50 PDUs in the PDU set. That is, the second network node 210 may discard 10 PDUs in the PDU set.

[0153] In some implementations, an average of the first discard ratio related to the first network node 210 and the second discard ratio related to the second network node 220 should be the same as or less than the total discard ratio. For example, if the total discard ratio is equal to 30%, the first network node 210 may determine the first discard ratio is equal to 40% while the second discard ratio is equal to 20%.

[0154] Alternatively, if the first information comprises the maximum discard ratio related to both the first network node and the second network node, the second information may comprise a first maximum discard ratio related to the first network node 210 and the third information may comprise a second maximum discard ratio related to the second network node 220.

[0155] In some implementations, the first maximum discard ratio may be equal to a first maximum percentage of a first plurality of PDUs which are to be discarded or which are allowed to be discarded by the first network node 210. The first plurality of PDUs are to be transmitted to the UE 104 by the first network node 210.

[0156] In such implementations, the second maximum discard ratio may be equal to a second maximum percentage of a second plurality of PDUs which are to be discarded or which are allowed to be discarded by the second network node 220. The second plurality of PDUs are to be transmitted to the UE 104 by the second network node 220.

[0157] In some implementations, an average of the first maximum discard ratio related to the first network node 210 and the second maximum discard ratio related to the second network node 220 should be the same as or less than the maximum discard ratio related to both the first network node and the second network node.

[0158] Alternatively, if the first information comprises the minimum discard ratio related to both the first network node and the second network node, the second information may comprise a first minimum discard ratio related to the first network node 210 and the third information may comprise a second minimum discard ratio related to the second network node 220.

[0159] In some implementations, the first minimum discard ratio may be equal to a first minimum percentage of a first plurality of PDUs which are to be discarded or which are allowed to be discarded by the first network node 210. The first plurality of PDUs are to be transmitted to the UE 104 by the first network node 210.

[0160] In some implementations, the second minimum discard ratio may be equal to a second minimum percentage of a second plurality of PDUs which are to be discarded or which are allowed to be discarded by the second network node 220. The second plurality of PDUs are to be transmitted to the UE 104 by the second network node 220.

[0161] In some implementations, an average of the first minimum discard ratio related to the first network node 210 and the second minimum discard ratio related to the second network node 220 should be the same as or less than the minimum discard ratio related to both the first network node and the second network node.

[0162] Alternatively, if the first information may comprise the total number of PDUs in the PDU set to be discarded by the first network node 210 and the second network node 220, the second information may comprise a third number of PDUs in the PDU set to be discarded by the first network node 210, and the third information may comprise a fourth number of PDUs in the PDU set to be discarded by the second network node 220.

[0163] Then, the first network node 210 transmits 340 the third information to the second network node 220.

[0164] In some implementations, if the first network node 210 is implemented as an MN of the UE 104 and the second network node 220 is implemented as an SN of the UE 104, then the first network node 210 may transmit an S-NODE addition request message or an S-NODE modification request message to the second network node 220. The S-NODE addition request message or the S-NODE modification request message may comprise the third information.

[0165] Alternatively, in some implementations, if the first network node 210 is implemented as a CU of a gNB and the second network node 220 is implemented as a DU of the gNB, then the first network node 210 may transmit an F1AP UE context setup request message or an F1AP UE context modification request message to the second network node 220. The F1AP UE context setup request message or the F1AP UE context modification request message may comprise the third information.

[0166] In turn, the first network node 210 discards 350 the at least one first PDU based on the second information.

[0167] In some implementations, if the second information comprises the first discard ratio, then the first network node 210 may discard the at least one first PDU in the PDU set based on the first discard ratio. For example, the total number of PDUs in the PDU set is represented by N, the number of the first plurality of PDUs are to be transmitted to the UE 104 by the first network node 210 is represented by Y1, the first discard ratio is represented by X1%, and a third number of PDUs in the PDU set to be discarded by the

first network node 210 is represented by M1. The first network node 210 may determine that M1 is an integer of Y1*X1%. For example, M1 is equal to floor [Y1*X1%] or ceil [Y1*X1%]. That is, the first network node 210 may discard M1 PDUs in the PDU set.

[0168] Alternatively, in some implementations, if the second information comprises the first maximum discard ratio, then the first network node 210 may discard the at least one first PDU in the PDU set based on the first maximum discard ratio. For example, the first network node 210 may determine a maximum number of PDUs to be discarded for the PDU set based on the number (i.e., Y1) of the first plurality of PDUs are to be transmitted to the UE 104 by the first network node 210 and the first maximum discard ratio. Then, the UE 104 may determine the third number (i.e., M1) to be equal to or less than the maximum number.

[0169] Alternatively, in some implementations, if the second information comprises the first minimum discard ratio, then the first network node 210 may discard the at least one first PDU in the PDU set based on the first minimum discard ratio. For example, the first network node 210 may determine a minimum number of PDUs to be discarded for the PDU set based on the number (i.e., Y1) of the first plurality of PDUs are to be transmitted to the UE 104 by the first network node 210 and the first minimum discard ratio. Then, the UE 104 may determine the third number (i.e., M1) to be equal to or greater than the minimum number.

[0170] Alternatively, in some implementations, if the second information comprises the third number of PDUs in the PDU set to be discarded by the first network node 210, then the first network node 210 may discard the at least one first PDU in the PDU set based on the third number. For example, the first network node 210 may discard the third number of PDUs in the PDU set.

[0171] The second network node 220 discards 360 the at least one second PDU based on the third information.

[0172] In some implementations, if the third information comprises the second discard ratio, then the second network node 220 may discard the at least one second PDU in the PDU set based on the second discard ratio. For example, the total number of PDUs in the PDU set is represented by N, the number of the first plurality of PDUs are to be transmitted to the UE 104 by the first network node 210 is represented by Y1, the number

of the second plurality of PDUs are to be transmitted to the UE 104 by the second network node 220 is represented by Y2, Y1+Y2=N. The second discard ratio is represented by X2%, and a fourth number of PDUs in the PDU set to be discarded by the second network node 220 is represented by M2. The second network node 210 may determine that M2 is an integer of Y2*X2%. For example, M2 is equal to floor [Y2*X2%] or ceil [Y2*X2%]. That is, the second network node 210 may discard M2 PDUs in the PDU set.

[0173] Alternatively, in some implementations, if the third information comprises the second maximum discard ratio, then the second network node 220 may discard the at least one second PDU in the PDU set based on the second maximum discard ratio. For example, the second network node 220 may determine a maximum number of PDUs to be discarded for the PDU set based on the number (i.e., Y2) of the second plurality of PDUs are to be transmitted to the UE 104 by the second network node 220 and the second maximum discard ratio. Then, the UE 104 may determine the fourth number (i.e., M2) to be equal to or less than the maximum number.

[0174] Alternatively, in some implementations, if the third information comprises the second minimum discard ratio, then the second network node 220 may discard the at least one second PDU in the PDU set based on the second minimum discard ratio. For example, the second network node 220 may determine a minimum number of PDUs to be discarded for the PDU set based on the number (i.e., Y2) of the second plurality of PDUs are to be transmitted to the UE 104 by the second network node 220 and the second minimum discard ratio. Then, the UE 104 may determine the third number (i.e., M1) to be equal to or greater than the minimum number.

[0175] Alternatively, in some implementations, if the third information comprises the fourth number of PDUs in the PDU set to be discarded by the second network node 220, then the second network node 220 may discard the at least one second PDU in the PDU set based on the fourth number. For example, the second network node 220 may discard the fourth number of PDUs in the PDU set.

[0176] With the process 300, coordination between network nodes on the FEC based discard may be achieved so as to avoid exceeding the allowed discard ratio. Thus, the UE can decode PDUs in a PDU set correctly.

[0177] Fig. 4 illustrates a signaling diagram illustrating an example process 400 that supports DL FEC based discard in accordance with some implementations of the present disclosure. The process 400 may be considered as an example implementation of the process 300. The process 400 may involve the UE 104, the core network 106, the first network node 210 and the second network node 220 in Fig. 2A or 2B. For the purpose of discussion, the process 300 will be described with reference to Fig. 2A or 2B.

[0178] Generally, in the process 400, the first network node 210 may be implemented as an MN of the UE 104 and the second network node 220 may be implemented as an SN of the UE 104. Alternatively, the first network node 210 may be implemented as a CU of a gNB and the second network node 220 may be implemented as a DU of the gNB.

[0179] Specifically, as shown in Fig. 4, the first network node 210 obtains 410 the first FEC information about a QoS flow from the core network 106.

[0180] In some implementations, the first FEC information about the QoS flow may comprise an indication indicating whether FEC is to be applied to the QoS flow.

[0181] Additionally, or alternatively, the first FEC information about the QoS flow may comprise an FEC encoding type which is to be applied to the QoS flow. For example, the FEC encoding type may be RaptorQ.

[0182] Additionally, or alternatively, the first FEC information about the QoS flow may comprise a redundant ratio for the QoS flow.

[0183] In some implementations, the redundant ratio may be equal to a ratio of a first number of PDUs in a PDU set which carry source symbols of the block comparing to a total number of the source symbols and repair symbols of the block. For example, if the first number is represented by K and the total number of the source symbols and repair symbols of the block is represented by N, the redundant ratio may be equal to K/N.

[0184] Alternatively, the redundant ratio may be equal to a ratio of a second number of PDUs in the PDU set which carry repair symbols of the block comparing to the total number of the source symbols and the repair symbols of the block. For example, if the second number is represented by (N-K) and the total number of the source symbols and repair symbols of the block is represented by N, the redundant ratio may be equal to (N-K)/N.

[0185] Additionally, or alternatively, the first FEC information about the QoS flow may comprise a first identifier (ID) of the QoS flow.

[0186] In some implementations, the first FEC information about the QoS flow may be provided as a part of QoS parameters or a part of PDU set QoS parameters of the QoS flow in a PDU session resource setup request message or a PDU session resource modify request message from the AMF or SMF in the core network 106. In such implementations, the first network node 210 may respond a PDU session resource setup response or a PDU session resource modify response message to the AMF or SMF.

[0187] Then, the first network node 210 determines 415 the total discard ratio for the QoS flow based on the first FEC information about the QoS flow. The total discard ratio for the QoS flow is related to both the first network node 210 and the second network node 220.

[0188] In some implementations, the MN may decide to configure MN terminated split bearer for the QoS flow. The MN terminated bearer is a radio bearer for which a PDCP entity is located in the MN and the user plane connection to the core network 106 is terminated in the MN. The split bearer means both MCG and secondary cell group (SCG) radio resources are involved for the transport of user plane data over the Uu interface. In such implementations, the MN may determine the total discard ratio for the QoS flow.

[0189] In some implementations, the total discard ratio for the QoS flow may be less than the redundant ratio for the QoS flow indicated in the first FEC information about the QoS flow. For example, the total discard ratio for the QoS flow may be less than (N-K)/N, where N represents the total number of PDUs in a PDU set, and K represents the first number of number of PDUs in the PDU set which carry source symbols of the block.

[0190] Alternatively, the first network node 210 may determine the maximum discard ratio for the QoS flow based on the first FEC information about the QoS flow. The maximum discard ratio for the QoS flow is related to both the first network node 210 and the second network node 220.

[0191] Alternatively, the first network node 210 may determine the minimum discard ratio for the QoS flow based on the first FEC information about the QoS flow. The

minimum discard ratio for the QoS flow is related to both the first network node 210 and the second network node 220.

[0192] Additionally, or alternatively, in some implementations, if only the QoS flow is mapped to a DRB (that is, there is one to one mapping relationship between the QoS flow and the DRB), then the first network node 210 may determine a total discard ratio for the DRB as the total discard ratio for the QoS flow.

[0193] In some implementations, if multiple QoS flows are mapped to a DRB (that is, there is many to one mapping relationship between QoS flows and DRB), and the multiple QoS flows comprises the QoS flow, then the first network node 210 may determine a total discard ratio for the DRB based on an average of total discard ratios for the multiple QoS flows.

[0194] Then, the first network node 210 determines 420 the first discard ratio for the QoS flow related to the first network node 210 and the second discard ratio for the QoS flow related to the second network node 220 based on the total discard ratio for the QoS flow.

[0195] Alternatively, if the first network node 210 determines a maximum discard ratio for the QoS flow related to both the first network node 210 and the second network node 220 based on the first FEC information about the QoS flow, then the first network node 210 determines 420 a first maximum discard ratio for the QoS flow related to the first network node 210 and a second maximum discard ratio for the QoS flow related to the second network node 220 based on the maximum discard ratio for the QoS flow.

[0196] Alternatively, if the first network node 210 determines a minimum discard ratio for the QoS flow related to both the first network node 210 and the second network node 220 based on the first FEC information about the QoS flow, then the first network node 210 determines 420 a first minimum discard ratio for the QoS flow related to the first network node 210 and a second minimum discard ratio for the QoS flow related to the second network node 220 based on the minimum discard ratio for the QoS flow.

[0197] Additionally, or alternatively, in some implementations, if the total discard ratio is for DRB, then the first discard ratio related to the first network node 210 is for the DRB and the second discard ratio related to the second network node 220 is for the DRB.

[0198] Then, the first network node 210 transmits 425 the second discard ratio for the QoS flow to the second network node 220. Additionally, or alternatively, in some implementations, the first network node 210 transmits 425 the second discard ratio for the DRB to the second network node 220.

[0199] In some implementations, if the first network node 210 is implemented as an MN of the UE 104 and the second network node 220 is implemented as an SN of the UE 104, then the first network node 210 may transmit the second discard ratio for the QoS flow or the second discard ration for the DRB by an SN addition request message or by an SN modification request message. Alternatively, the first network node 210 may transmit the second maximum discard ratio for the QoS flow or the second maximum discard ratio for the DRB by an SN addition request message or by an SN modification request message. Alternatively, the first network node 210 may transmit the second minimum discard ratio for the QoS flow the second minimum discard ratio for the DRB by an SN addition request message or by an SN modification request message.

[0200] Alternatively, in some implementations, if the first network node 210 is implemented as a CU of a gNB and the second network node 220 is implemented as a DU of the gNB, then the first network node 210 may transmit the second discard ratio for the QoS flow or the second discard ratio for the DRB by an F1AP UE context setup request message or by an F1AP UE context modification request message. Alternatively, the first network node 210 may transmit the second maximum discard ratio for the QoS flow or the second maximum discard ratio for the DRB by an F1AP UE context setup request message or by an F1AP UE context modification request message. Alternatively, the first network node 210 may transmit the second minimum discard ratio for the QoS flow or the second minimum discard ratio for the DRB by an F1AP UE context setup request message or by an F1AP UE context modification request message.

[0201] Then, the first network node 210 discards 430 the at least one first PDU based on the first discard ratio for the QoS flow or the first discard ratio for the DRB.

[0202] Alternatively, in some implementations, the first network node 210 discards the at least one first PDU based on the first maximum discard ratio for the QoS flow or the first maximum discard ratio for the DRB. Alternatively, in some implementations, the first network node 210 discards the at least one first PDU based on the first minimum discard ratio for the QoS flow or the first minimum discard ratio for the DRB.

[0203] For example, the first network node 210 may discard the at least one first PDU as described above with respect to the action 350 in Fig. 3.

[0204] Then, the second network node 220 discards 435 the at least one second PDU based on the second discard ratio for the QoS flow or the second discard ratio for the DRB.

[0205] Alternatively, in some implementations, the second network node 220 discards the at least one second PDU based on the second maximum discard ratio for the QoS flow or the second maximum discard ratio for the DRB. Alternatively, in some implementations, the second network node 220 discards the at least one second PDU based on the second minimum discard ratio for the QoS flow or the second minimum discard ratio for the DRB.

[0206] For example, the second network node 220 may discard the at least one second PDU as described above with respect to the action 360 in Fig. 3.

[0207] In turn, the first network node 210 transmits 440 the remaining PDUs to the UE 104.

[0208] In some implementations, the number of remaining PDUs transmitted by the first network node 210 is equal to a difference between the number (i.e., Y1) of the first plurality of PDUs which are to be transmitted to the UE 104 by the first network node 210 and the third number (M1) of PDUs discarded by the first network node 210 for the PDU set.

[0209] The second network node 220 transmits 445 the remaining PDUs to the UE 104.

[0210] In some implementations, the number of remaining PDUs transmitted by the second network node 220 is equal to a difference between the number (i.e., Y2) of the second plurality of PDUs which are to be transmitted to the UE 104 by the second network node 220 and the fourth number (M2) of PDUs discarded by the second network node 220 for the PDU set.

[0211] Fig. 5 illustrates a signaling diagram illustrating an example process 500 that supports DL FEC based discard in accordance with aspects of the present disclosure. The process 500 may be considered as an example implementation of the process 300. The

process 500 may involve the UE 104, the core network 106, the first network node 210 and the second network node 220 in Fig. 2A or 2B. For the purpose of discussion, the process 500 will be described with reference to Fig. 2A or 2B.

[0212] Generally, in the process 500, the first network node 210 may be implemented as an MN of the UE 104 and the second network node 220 may be implemented as an SN of the UE 104. Alternatively, the first network node 210 may be implemented as a CU of a gNB and the second network node 220 may be implemented as a DU of the gNB.

[0213] Specifically, as shown in Fig. 5, the first network node 210 obtains 510 second FEC information about at least one PDU set.

[0214] In some implementations, each of the at least one PDU set may be associated with a block of source data. This will be described with reference to Fig. 6.

[0215] Fig. 6 illustrates an example of a block of source data 600 in accordance with some implementations of the present disclosure. As shown in Fig. 6, the block of source data 600 is also referred to as a source block 600. The source block 600 may be partitioned into equal-size pieces of data, called source symbols. The source block 600 may comprise one or more source symbols with specific bits. For example, the last source symbol in the source block 600 comprises padding bits.

[0216] Packets from 0 to K-1 identify the source symbols of the source block 600 in sequential order, where K is the number (i.e. the first number) of source symbols in the source block 600. Encoding Symbol IDs K onwards identify repair symbols generated from the source symbols using an FEC encoder. A total number of the source symbols and the repair symbols of the source block 600 is represented by N, where N >= K.

[0217] Typically, an FEC decoder requires only any K or only a small amount more than K packets of the N packets to recover the source symbols. Based on this, the definition of a PDU set may be applied to all packets of the source block 600. In other words, the PDU set is associated with the source block 600. The first number of PDUs (i.e., K PDUs) in the PDU set carry K source symbols of the source block 600. A second number of PDUs (i.e., N-K) PDUs in the PDU set carry (N-K) repair symbols of the source block 600. Any K PDUs in the PDU sets are sufficient to recover, i.e., all PDUs are of the same importance (which are of the same importance requirement at application

layer). As only K out N PDUs are required, the application layer can still recover parts of the information unit when some PDUs are missing.

[0218] For example, Raptor is an FEC technology and RaptorQ is the most flexible and powerful product in the Raptor technology line, pioneered by Digital Fountain. RaptorQ encodes and decodes the source block 600. The RaptorQ encoder generates repair symbols from the source symbols of the source block 600, where the repair symbols are the same size as the source symbols and the encoded symbols that can be transmitted comprise the combination of the source symbols and the repair symbols. Typically, each encoded symbol is transmitted in an individual packet together with a 32-bit header, called the FEC Payload ID consisting of an 8-bit source block number and a 24-bit encoded symbol identifier (ESI) that allows the receiver to identify the encoded symbol carried in a packet.

[0219] In some implementations, the PDU set may comprise PDUs that are comprised of the source block 600 and a PDU in the PDU set is equal to a source symbol or repair symbol in the source block 600.

[0220] Returning to Fig. 5, in some implementations, the second FEC information about at least one PDU set obtained by the first network node 210 may comprise a first indication indicating whether FEC is to be applied to the at least one PDU set.

[0221] Additionally, or alternatively, in some implementations, the second FEC information about at least one PDU set may comprise a sequence number (SN) of each of the at least one PDU set. For example, the second FEC information about at least one PDU set may comprise a first SN of a first PDU set and a second SN of a second PDU set.

[0222] Additionally, or alternatively, in some implementations, the second FEC information about at least one PDU set may comprise an FEC encoding type which is to be applied to each of the at least one PDU set.

[0223] Additionally, or alternatively, in some implementations, the second FEC information about at least one PDU set may comprise a first number of PDUs in each of the at least one PDU set which carry source symbols of the block. The first number of PDUs which carry source symbols of the block is represented by K.

[0224] Additionally, or alternatively, in some implementations, the second FEC information about at least one PDU set may comprise a second number of PDUs in each of the at least one PDU set which carry repair symbols of the block. The second number of PDUs which carry repair symbols of the block is represented by (N-K), where N represents a total number of the source symbols and the repair symbols of the block.

[0225] Additionally, or alternatively, in some implementations, the second FEC information about at least one PDU set may comprise the total number of the source symbols and the repair symbols of the block.

[0226] Additionally, or alternatively, in some implementations, the second FEC information about at least one PDU set may comprise a size of each of the source symbols and the repair symbols. For example, the size of each of the source symbols and the repair symbols may be in unit of bytes.

[0227] Additionally, or alternatively, in some implementations, the second FEC information about at least one PDU set may comprise a last symbol among the source symbols which comprises padding bits.

[0228] Additionally, or alternatively, in some implementations, the second FEC information about at least one PDU set may comprise a second indication of one of the source symbols which comprises padding bits.

[0229] Additionally, or alternatively, in some implementations, the second FEC information about at least one PDU set may comprise an FEC payload ID of each of the source symbols and the repair symbols of the block.

[0230] Then, the first network node 210 may determine 515 the total discard ratio for each of the at least one PDU set based on the second FEC information about at least one PDU set. Alternatively, the first network node 210 may determine the total number of PDUs to be discarded for each of the at least one PDU set. The total discard ratio for each of the at least one PDU set or the total number of PDUs to be discarded for each of the at least one PDU set is related to both the first network node 210 and the second network node 220.

[0231] In some implementations, the total discard ratio for each of the at least one PDU set may be less than the redundant ratio for each of the at least one PDU set (i.e.,

(N-K)/N), where N represents the total number of PDUs in a PDU set, and K represents the first number of PDUs in the PDU set which carry source symbols of the block.

[0232] Alternatively, the first network node 210 may determine a maximum number of PDUs to be discarded for each of the at least one PDU set based on the second FEC information about the at least one PDU set. The maximum number is related to both the first network node 210 and the second network node 220.

[0233] Alternatively, the first network node 210 may determine a minimum number of PDUs to be discarded for each of the at least one PDU set based on the second FEC information about the at least one PDU set. The minimum number is related to both the first network node 210 and the second network node 220.

[0234] Alternatively, the first network node 210 may determine a maximum discard ratio for each of the at least one PDU set related to both the first network node 210 and the second network node 220 based on the second FEC information about the PDU set. The maximum discard ratio for each of the at least one PDU set is related to both the first network node 210 and the second network node 220.

[0235] Alternatively, the first network node 210 may determine a minimum discard ratio for each of the at least one PDU set based on the second FEC information about the at least one PDU set. The minimum discard ratio for each of the at least one PDU set is related to both the first network node 210 and the second network node 220.

[0236] Then, the first network node 210 determines 520 a first discard ratio for each of the at least one PDU set and a second discard ratio for each of the at least one PDU set based on the total discard ratio for each of the at least one PDU set. The first discard ratio is related to the first network node 210. The second discard ratio is related to the second network node 220.

[0237] Alternatively, the first network node 210 may determine a third number of PDUs to be discarded by the first network node 210 for each of the at least one PDU set and a fourth number of PDUs to be discarded by the second network node 220 for each of the at least one PDU set.

[0238] Alternatively, if the first network node 210 determines a maximum number of PDUs to be discarded for each of the PDU set related to both the first network node 210 and the second network node 220 based on the second FEC information, then the first

network node 210 determines a third maximum number of PDUs to be discarded by the first network node 210 for each of the PDU set and a fourth maximum number of PDUs to be discarded by the second network node 220 for each of the PDU set based on the maximum number of PDUs to be discarded for each of the PDU set.

[0239] Alternatively, if the first network node 210 determines a minimum number of PDUs to be discarded for each of the PDU set related to both the first network node 210 and the second network node 220 based on the second FEC information, then the first network node 210 determines a third minimum number of PDUs to be discarded by the first network node 210 for each of the at least one PDU set and a fourth minimum number of PDUs to be discarded by the second network node 220 for each of the at least one PDU set based on the minimum number of PDUs to be discarded for each of the at least one PDU set.

[0240] Alternatively, if the first network node 210 determines a maximum discard ratio for each of the at least one PDU set related to both the first network node 210 and the second network node 220 based on the second FEC information, then the first network node 210 determines 520 a first maximum discard ratio for each of the at least one PDU set related to the first network node 210 and a second maximum discard ratio for each of the at least one PDU set related to the second network node 220 based on the maximum discard ratio for each of the at least one PDU set.

[0241] Alternatively, if the first network node 210 determines a minimum discard ratio for each of the at least one PDU set related to both the first network node 210 and the second network node 220 based on the second FEC information about the PDU set, then the first network node 210 determines 520 a first minimum discard ratio for each of the at least one PDU set and a second minimum discard ratio for each of the at least one PDU set based on the minimum discard ratio for each of the at least one PDU set. The first minimum discard ratio for each of the at least one PDU set is related to the first network node 210. The second minimum discard ratio for each of the at least one PDU set is related to the second network node 220.

[0242] Then, the first network node 210 transmits 525, to the second network node 220, the second discard ratio or the fourth number of PDUs to be discarded for each of the at least one PDU set.

[0243] In some implementations, if the first network node 210 is implemented as an MN of the UE 104 and the second network node 220 is implemented as an SN of the UE 104, then the first network node 210 may transmit the second discard ratio or the fourth number of PDUs to be discarded for each of the at least one PDU set by an SN addition request message or by an SN modification request message. Alternatively, the first network node 210 may transmit the second maximum discard ratio or the fourth maximum number of PDUs to be discarded for each of the at least one PDU set by an SN addition request message or by an SN modification request message. Alternatively, the first network node 210 may transmit the second minimum discard ratio or the fourth minimum number of PDUs to be discarded for each of the at least one PDU set by an SN addition request message or by an SN modification request message.

[0244] Alternatively, in some implementations, if the first network node 210 is implemented as a CU of a gNB and the second network node 220 is implemented as a DU of the gNB, then the first network node 210 may transmit the second discard ratio or the fourth number of PDUs to be discarded for each of the at least one PDU set by an F1AP UE context setup request message or by an F1AP UE context modification request message. Alternatively, the first network node 210 may transmit the second maximum discard ratio or the fourth maximum number of PDUs to be discarded for each of the at least one PDU set by an F1AP UE context setup request message or by an F1AP UE context modification request message. Alternatively, the first network node 210 may transmit the second minimum discard ratio or the fourth minimum number of PDUs to be discarded for each of the at least one PDU set by an F1AP UE context setup request message or by an F1AP UE context modification request message.

[0245] Alternatively, in some implementations, the first network node 210 may transmit the second discard ratio, the second maximum discard ratio, the second minimum discard ratio, the fourth number of PDUs to be discarded for each of the at least one PDU set, the fourth maximum number of PDUs to be discarded for each of the at least one PDU set or the fourth minimum number to be discarded for each of the at least one PDU set in the user plane protocol. For example, such information may be comprised in a PDU set information container of a general packet radio service (GPRS) tunnel protocol-user plane (GTP-U) extension header.

[0246] Then, the first network node 210 discards 530 the at least one first PDU based on the first discard ratio or the third number of PDUs to be discarded for each of the at least one PDU set.

[0247] Alternatively, in some implementations, the first network node 210 may discard the at least one first PDU based on the first maximum discard ratio for each of the at least one PDU set. Alternatively, in some implementations, the first network node 210 may discard the at least one first PDU based on the first minimum discard ratio for each of the at least one PDU set.

[0248] Alternatively, in some implementations, the first network node 210 may discard the at least one first PDU based on the third maximum number for each of the at least one PDU set. Alternatively, in some implementations, the first network node 210 may discard the at least one first PDU based on the third minimum number for each of the at least one PDU set.

[0249] For example, the first network node 210 may discard the at least one first PDU as described above with respect to the action 350 in Fig. 3.

[0250] The second network node 220 discards 535 the at least one second PDU based on the second discard ratio or the fourth number of PDUs to be discarded for each of the at least one PDU set.

[0251] Alternatively, in some implementations, the second network node 220 discards the at least one second PDU based on the second maximum discard ratio for each of the at least one PDU set. Alternatively, in some implementations, the second network node 220 discards the at least one second PDU based on the second minimum discard ratio for each of the at least one PDU set.

[0252] Alternatively, in some implementations, the second network node 220 discards the at least one second PDU based on the fourth maximum number for each of the at least one PDU set. Alternatively, in some implementations, the second network node 220 discards the at least one second PDU based on the fourth minimum number for each of the at least one PDU set.

[0253] For example, the second network node 220 may discard the at least one second PDU as described above with respect to the action 360 in Fig. 3.

[0254] In turn, the first network node 210 transmits 540 the remaining PDUs to the UE 104. The action 540 is similar to the action 440 in Fig. 4. Thus, details of the action 540 are omitted for brevity.

[0255] The second network node 220 transmits 545 the remaining PDUs to the UE 104. The action 545 is similar to the action 445 in Fig. 4. Thus, details of the action 545 are omitted for brevity.

[0256] Fig. 7 illustrates a signaling diagram illustrating an example process 700 that supports DL FEC based discard in accordance with aspects of the present disclosure. The process 700 may be considered as an example implementation of the process 300. The process 700 may involve the UE 104, the core network 106, the first network node 210 and the second network node 220 in Fig. 2A or 2B. For the purpose of discussion, the process 600 will be described with reference to Fig. 2A or 2B.

[0257] Generally, in the process 700, the first network node 210 may be implemented as an MN of the UE 104 and the second network node 220 may be implemented as an SN of the UE 104. Alternatively, the first network node 210 may be implemented as a CU of a gNB and the second network node 220 may be implemented as a DU of the gNB.

[0258] Specifically, as shown in Fig. 7, the first network node 210 obtains 710 third FEC information about at least one PDU set with at least one protocol data unit set importance (PSI) value within a QoS flow. Hereinafter, the third FEC information about at least one PDU set with at least one PSI value is also referred to as third FEC information about at least one PSI value.

[0259] In some implementations, each of the at least one PDU set may be associated with a block of source data. An example of the block of source data has been described with reference to Fig. 6. Thus, details of the block of source data are omitted for brevity.

[0260] In some implementations, the third FEC information about at least one PSI value may comprise an indication indicating whether FEC is to be applied to the at least one PDU set with the at least one PSI value.

[0261] Additionally, or alternatively, in some implementations, the third FEC information about at least one PSI value may comprise an FEC encoding type which is to be applied to each of the at least one PDU set with the at least one PSI value.

[0262] Additionally, or alternatively, in some implementations, the third FEC information about at least one PSI value may comprise a redundant ratio for the at least one PDU set with the at least one PSI value.

[0263] Then, the first network node 210 determines 715 the total discard ratio for each of the at least one PSI value based on the third FEC information about at least one PSI value about the PDU set. The total discard ratio for each of the at least one PSI value is related to both the first network node 210 and the second network node 220.

[0264] In some implementations, the total discard ratio for each of the at least one PSI value may be less than the redundant ratio for each of the at least one PSI value (i.e., (N-K)/N), where N represents the total number of PDUs in a PDU set, and K represents the first number of PDUs in the PDU set which carry source symbols of the block.

[0265] Alternatively, the first network node 210 may determine a maximum discard ratio for each of the at least one PSI value based on the third FEC information about the at least one PSI value. The maximum discard ratio for each of the at least one PSI value is related to both the first network node 210 and the second network node 220.

[0266] Alternatively, the first network node 210 may determine a minimum discard ratio for each of the at least one PSI value based on the third FEC information about the at least one PSI value. The minimum discard ratio for each of the at least one PSI value is related to both the first network node 210 and the second network node 220.

[0267] Then, the first network node 210 determines 720 a first discard ratio for each of the at least one PSI value and a second discard ratio for each of the at least one PSI value based on the total discard ratio for each of the at least one PSI value. The first discard ratio for each of the at least one PSI value is related to the first network node 210. The second discard ratio for each of the at least one PSI value is related to the second network node 220.

[0268] Alternatively, if the first network node 210 determines a maximum discard ratio for each of the at least one PSI value related to both the first network node 210 and the second network node 220 based on the third FEC information, then the first network node 210 determines 420 a first maximum discard ratio for each of the at least one PSI value and a second maximum discard ratio for each of the at least one PSI value based on the maximum discard ratio for each of the at least one PSI value. The first maximum

discard ratio for each of the at least one PSI value is related to the first network node 210. The second maximum discard ratio for each of the at least one PSI value is related to the second network node 220.

[0269] Alternatively, if the first network node 210 determines a minimum discard ratio for each of the at least one PSI value related to both the first network node 210 and the second network node 220 based on the third FEC information, then the first network node 210 determines 420 a first minimum discard ratio for each of the at least one PSI value and a second minimum discard ratio for each of the at least one PSI value based on the minimum discard ratio for each of the at least one PSI value. The first minimum discard ratio for each of the at least one PSI value is related to the first network node 210. The second minimum discard ratio for each of the at least one PSI value is related to the second network node 220.

[0270] Then, the first network node 210 transmits 725 the second discard ratio for each of the at least one PSI value to the second network node 220.

[0271] In some implementations, if the first network node 210 comprises is implemented as an MN of the UE 104 and the second network node 220 is implemented as an SN of the UE 104, then the first network node 210 may transmit the second discard ratio for each of the at least one PSI value by an SN addition request message or by an SN modification request message. Alternatively, the first network node 210 may transmit the second maximum discard ratio or the second minimum discard ratio for each of the at least one PSI value by an SN addition request message or by an SN modification request message.

[0272] Alternatively, in some implementations, if the first network node 210 is implemented as a CU of a gNB and the second network node 220 is implemented as a DU of the gNB, then the first network node 210 may transmit the second discard ratio for each of the at least one PSI value by an F1AP UE context setup request message or by an F1AP UE context modification request message. Alternatively, the first network node 210 may transmit the second maximum discard ratio or the second minimum discard ratio for each of the at least one PSI value by an F1AP UE context setup request message or by an F1AP UE context modification request message.

[0273] Then, the first network node 210 discards 730 the at least one first PDU based on the first discard ratio for each of the at least one PSI value.

[0274] Alternatively, in some implementations, the first network node 210 discards the at least one first PDU based on the first maximum discard ratio for each of the at least one PSI value. Alternatively, in some implementations, the first network node 210 discards 730 the at least one first PDU based on the first minimum discard ratio for each of the at least one PSI value.

[0275] For example, the first network node 210 may discard the at least one first PDU as described above with respect to the action 350 in Fig. 3.

[0276] The second network node 220 discards 735 the at least one second PDU based on the second discard ratio for each of the at least one PSI value.

[0277] Alternatively, in some implementations, the second network node 220 discards the at least one second PDU based on the second maximum discard ratio for each of the at least one PSI value. Alternatively, in some implementations, the second network node 220 discards the at least one second PDU based on the second minimum discard ratio for the PSI.

[0278] For example, the second network node 220 may discard the at least one second PDU as described above with respect to the action 360 in Fig. 3.

[0279] In turn, the first network node 210 transmits 740 the remaining PDUs to the UE 104. The action 740 is similar to the action 440 in Fig. 4. Thus, details of the action 740 are omitted for brevity.

[0280] The second network node 220 transmits 745 the remaining PDUs to the UE 104. The action 745 is similar to the action 445 in Fig. 4. Thus, details of the action 745 are omitted for brevity.

[0281] Fig. 8 illustrates a signaling diagram illustrating an example process 800 that supports DL FEC based discard in accordance with aspects of the present disclosure. The process 800 may involve the UE 104, the core network 104, the first network node 210 and the second network node 220 in Fig. 2A or 2B. For the purpose of discussion, the process 800 will be described with reference to Fig. 2A or 2B.

[0282] Generally, in the process 800, the first network node 210 may be implemented as an MN of the UE 104 and the second network node 220 may be implemented as an SN of the UE 104. The MN of the UE 104 may be implemented as a PDCP terminated node and perform FEC based discard considering assistance information about the FEC based discard from the SN of the UE 104 into account.

[0283] Alternatively, the first network node 210 may be implemented as a CU of a gNB and the second network node 220 may be implemented as a DU of the gNB. The CU may be implemented as a PDCP terminated node and perform FEC based discard considering assistance information about the FEC based discard from the DU into account.

[0284] Specifically, as shown in Fig. 8, the first network node 210 transmits 810 a first indication to the second network node 220. The first indication indicates that FEC based discard is to be performed by the first network node 210.

[0285] In some implementations, the first indication may indicate that the FEC based discard is to be performed for a QoS flow or a DRB to which the QoS flow is mapped, which will be described later with reference to Fig. 9 in detail.

[0286] Alternatively, in some implementations, the first indication may indicate that the FEC based discard is to be performed for a PDU set, which will be described later with reference to Fig. 10 in detail.

[0287] In some implementations, the first indication may indicate that the FEC based discard is to be performed for a PSI value (for example, a PSI value of a QoS flow, or a PSI value of a DRB), which will be described later with reference to Fig. 11 in detail.

[0288] Additionally, in some implementations, the first indication may further indicate to request assistance information about the FEC based discard. In this way, the first network node 210 may request the assistance information by transmitting the first indication to the second network node 220.

[0289] In some implementations, the first indication may indicate to request the assistance information about the FEC based discard for one of the following: a QoS flow, a DRB to which the QoS flow is mapped, a PSI value, or a PDU set. Such implementations will be described later with reference to Figs. 9 to 11, respectively.

[0290] In some implementations, if the first network node 210 is implemented as an MN of the UE 104 and the second network node 220 is implemented as an SN of the UE 104, then the first network node 210 may transmit an S-NODE addition request message or an S-NODE modification request message to the second network node 220. The S-NODE addition request message or the S-NODE modification request message may comprise a PDU Session Resource Setup Info – MN terminated information element (IE), and the PDU Session Resource Setup Info – MN terminated IE may comprise the first indication.

[0291] Alternatively, in some implementations, if the first network node 210 is implemented as a CU of a gNB and the second network node 220 is implemented as a DU of the gNB, then the first network node 210 may transmit the first indication by an F1AP UE context setup request message or by an F1AP UE context modification request message.

[0292] In some implementations, the first network node 210 may further transmit, to the second network node 220, a periodicity for providing the assistance information about the FEC based discard from the second network node 220.

[0293] Additionally, or alternatively, the first network node 210 may further transmit, to the second network node 220, an event for providing the assistance information about the FEC based discard from the second network node 220.

[0294] In some implementations, before transmitting the first indication to the second network node 220, the first network node 210 may obtain FEC information from the core network 106. In such implementations, the FEC information may be transmitted in a PDU session resource setup request message or a PDU session resource modify request message. After that, the first network node 210 may transmit the FEC information to the second network node 220. In such implementations, the second network node 220 may transmit, to the first network node 210, a PDU session resource setup response message or a PDU session resource modify message.

[0295] Then, the second network node 220 transmits 820 the assistance information about the FEC based discard to the first network node 210.

[0296] In some implementations, if the first network node 210 transmits the periodicity for providing the assistance information about the FEC based discard, then the

second network node 220 will periodically transmit the assistance information about the FEC based discard to the first network node 210.

[0297] Alternatively, in some implementations, if the first network node 210 transmits the event for providing the assistance information about the FEC based discard, then the second network node 220 will transmit the assistance information about the FEC based discard to the first network node 210 based on the event.

[0298] In some implementations, the event for providing the assistance information may comprise a first threshold for a congestion level of the second network node 220. If the congestion level of the second network node 220 is above the first threshold, the second network node 220 may provide the assistance information to the first network node 210. Thus, frequent transmission of the assistance information may be avoided.

[0299] In such implementations, four congestion levels may be defined and represented by values 0, 1, 2, and 3, respectively. For example, the value '0' may indicate the lowest congestion level and the value '3' may indicate the highest congestion level. In some examples, the first threshold for the congestion level of the second network node 220 may be set to the value '2', and if the congestion level of the second network node 220 is equal to or greater than the value '2', the second network node 220 may provide the assistance information to the first network node 210.

[0300] Alternatively, the event for providing the assistance information may comprise a second threshold for a congestion percentage of the second network node 220. If the congestion percentage of the second network node 220 is above the second threshold, the second network node 220 may provide the assistance information to the first network node 210. Thus, frequent transmission of the assistance information may be avoided.

[0301] In such implementations, a congestion percentage of '100%' may indicate fully congestion and a congestion percentage of '0%' may indicate no congestion. For example, the second threshold for the congestion percentage may be set to '60%', and if the congestion percentage of the second network node 220 is equal to or greater than '60%', the second network node 220 may provide the assistance information to the first network node 210.

[0302] In some implementations, the assistance information about the FEC based discard may comprise a discard ratio for the PDUs which are to be transmitted to a UE by the second network node 220.

[0303] Additionally, or alternatively, the assistance information about the FEC based discard may comprise a maximum discard ratio for the PDUs which are to transmitted to the UE by the second network node 220.

[0304] Additionally, or alternatively, the assistance information about the FEC based discard may comprise a first number of PDUs to be discarded for a PDU set. At least part of PDUs in the PDU set is to transmitted to the UE 104 by the second network node 220.

[0305] Additionally, or alternatively, the assistance information about the FEC based discard may comprise a maximum number of PDUs to be discarded for the PDU set.

[0306] Additionally, or alternatively, the assistance information about the FEC based discard may comprise a congestion level of the second network node 220.

[0307] In some implementations, if the first indication indicates to request the assistance information about the FEC based discard for a QoS flow, the assistance information about the FEC based discard may be for a QoS flow or a DRB to which the QoS flow is mapped.

[0308] Additionally, or alternatively, if the first indication indicates to request the assistance information about the FEC based discard for a PSI value (for example, a PSI value of a QoS flow or a PSI value of a DRB), the assistance information about the FEC based discard may be for at least one PDU set with the PSI value (for example, a PSI value of a QoS flow or a PSI value of a DRB). In such implementations, the first network node 210 may transmit the PSI value to the second network node 220. In such implementations, the assistance information about the FEC based discard may comprise the PSI value.

[0309] Additionally, or alternatively, if the first indication indicates to request the assistance information about the FEC based discard for at least one second PDU set, the assistance information about the FEC based discard may be for the at least one second PDU set. In such implementations, the first network node 210 may transmit at least one SN of the at least one second PDU set to the second network node 220. In such

implementations, the assistance information about the FEC based discard may comprise the at least one SN of the at least one second PDU set.

[0310] In some implementations, if the first network node 210 transmits the first indication via an S-NODE addition request message or an S-NODE modification request message, then the first network node 210 may receive the assistance information about the FEC based discard via an S-NODE addition acknowledge message or an S-NODE modification required message.

[0311] Alternatively, in some implementations, if the first network node 210 transmits the first indication via an F1AP UE context setup request message or an F1AP UE context modification request message, then the first network node 210 may receive the assistance information about the FEC based discard via an F1AP UE context setup response message or by an F1AP UE context modification response message.

[0312] Alternatively, in some implementations, the first network node 210 receive the assistance information about the FEC based discard via the user plane protocol. In some implementations, the assistance information may be comprised in a RAN container of a GTP-U extension header. For example, the assistance information may be comprised in a DL data delivery status frame of the RAN container of the GTP-U extension header. Alternatively, the assistance information may be comprised in a PDU set container of a GTP-U extension header. The assistance information may be in an existing frame or a new frame of the PDU set container of the GTP-U extension header.

[0313] In turn, the first network node 210 performs 830 the FEC based discard based on the assistance information.

[0314] In some implementations, the first network node 210 may perform the FEC based discard based on congestion status of the first network node 210 and the assistance information from the second network node 220.

[0315] In some implementations, the first network node 210 may receive SDAP SDUs of a QoS flow from UPF in the core network 106. The first network node 210 may decide to perform the FEC based discard for a PDU.

[0316] In some implementations, if the assistance information about the FEC based discard comprises the discard ratio for the PDUs which are to transmitted to the UE 104 by the second network node 220, the first network node 210 may perform the FEC based

discard based on the discard ratio. For example, if the discard ratio is equal to 20%, the first network node 210 may discard no more than 20% of PDUs in the PDU set that are to be transmitted to the

[0317] In some implementations, if the assistance information about the FEC based discard comprises a maximum discard ratio for the PDUs which are to transmitted to the UE 104 by the second network node 220, the first network node 210 performs the FEC based discard based on the maximum discard ratio.

[0318] In some implementations, if the assistance information about the FEC based discard comprises a first number of PDUs to be discarded for a PDU set which is to transmitted to the UE 104 by the second network node 220, the first network node 210 may perform the FEC based discard based on the first number.

[0319] In some implementations, if the assistance information about the FEC based discard comprises a maximum number of PDUs to be discarded for the PDU set, the first network node 210 performs the FEC based discard based on the maximum number.

[0320] In some implementations, if the assistance information about the FEC based discard comprises the congestion level of the second network node 220, the first network node 210 may perform the FEC based discard based on the congestion level of the second network node 220. For example, if the congestion level is high, the first network node 210 may discard more PDUs in the PDU set.

[0321] Fig. 9 illustrates a signaling diagram illustrating an example process 900 that supports DL FEC based discard in accordance with some implementations of the present disclosure. The process 900 may be considered as an example implementation of the process 800. The process 900 may involve the UE 104, the core network 106, the first network node 210 and the second network node 220 in Fig. 2A or 2B. For the purpose of discussion, the process 900 will be described with reference to Fig. 2A or 2B.

[0322] Generally, in the process 900, the first network node 210 may be implemented as an MN of the UE 104 and the second network node 220 may be implemented as an SN of the UE 104. Alternatively, the first network node 210 may be implemented as a CU of a gNB and the second network node 220 may be implemented as a DU of the gNB.

[0323] In some implementations, in MR-DC with 5GC, the MN decides per PDU session location of an SDAP entity, i.e., whether it shall be hosted by the MN or the SN

or by both (for split PDU session). If the MN decides to host the SDAP entity, the MN may deicide some of the related QoS flows to be realized as MCG bearer, some to be realized as SCG bearer, and others to be realized as split bearer, in which case the bearer is called as MN terminated MCG bearer, MN terminated SCG bearer and MN terminated split bearer, respectively.

[0324] The first network node 210 obtains 910 first FEC information about a QoS flow from the core network 106.

[0325] In some implementations, the action 910 is similar to the action 410 in Fig. 4. Thus, details of the action 910 are omitted for brevity.

[0326] In some implementations, after the first network node 210 obtains the first FEC information about the QoS flow from the core network 106, the first network node 210 may transmit the first FEC information to the second network node 220.

[0327] Then, the first network node 210 transmits 920, to second network node 220, the first indication indicating to request the assistance information about the FEC based discard for the QoS flow.

[0328] Alternatively, the first network node 210 may transmit, to second network node 220, the first indication indicating to request the assistance information about the FEC based discard for a DRB to which the QoS flow is mapped.

[0329] In some implementations, if the first network node 210 is implemented as an MN of the UE 104 and the second network node 220 is implemented as an SN of the UE 104, then the first network node 210 may transmit the first indication via an S-NODE addition request message or an S-NODE modification request message.

[0330] Alternatively, in some implementations, if the first network node 210 is implemented as a CU of a gNB and the second network node 220 is implemented as a DU of the gNB, then the first network node 210 may transmit the first indication via an F1AP UE context setup request message or by an F1AP UE context modification request message.

[0331] Then, the first network node 210 receives 930 the assistance information about the FEC based discard for the QoS flow.

[0332] Alternatively, in some implementations, the assistance information about the FEC based discard for the QoS flow may comprise the discard ratio for the QoS flow or the DRB to which the QoS flow is mapped.

[0333] Additionally, or alternatively, the assistance information about the FEC based discard for the QoS flow may comprise the maximum discard ratio for the QoS flow or the DRB.

[0334] Additionally, or alternatively, in some implementations, the assistance information about the FEC based discard for the QoS flow may comprise the congestion level of the second network node 220 for the QoS flow or the DRB.

[0335] Alternatively, in some implementations, the congestion level may be for a cell (such as PScell), for a node (such as the SN) or for a cell group (such as SCG).

[0336] Then, the first network node 210 performs 940 the FEC based discard based on the assistance information about the FEC based discard for the QoS flow. The action 940 is similar to the action 830 in Fig. 8. Details of the action 940 are omitted for brevity.

[0337] In turn, the first network node 210 performs 950 transmission of the remaining PDUs to the UE 104.

[0338] In some implementations, the number of remaining PDUs transmitted by the first network node 210 is equal to a difference between the number of PDUs which are to be transmitted to the UE 104 by the first network node 210 and the number of PDUs discarded by the first network node 210 for the PDU set.

[0339] In turn, the second network node 220 performs 960 transmission of PDUs to the UE 104.

[0340] In some implementations, the second network node 220 may receive the PDUs to be transmitted to the UE 104 from the first network node 210.

[0341] Fig. 10 illustrates a signaling diagram illustrating an example process 1000 that supports DL FEC based discard in accordance with some implementations of the present disclosure. The process 1000 may be considered as an example implementation of the process 800. The process 1000 may involve the UE 104, the core network 106, the first network node 210 and the second network node 220 in Fig. 2A or 2B. For the purpose of discussion, the process 1000 will be described with reference to Fig. 2A or 2B.

[0342] Generally, in the process 1000, the first network node 210 may be implemented as an MN of the UE 104 and the second network node 220 may be implemented as an SN of the UE. Alternatively, the first network node 210 may be implemented as a CU of a gNB and the second network node 220 may be implemented as a DU of the gNB.

[0343] Specifically, as shown in Fig. 10, the first network node 210 obtains 1010 second FEC information about a PDU set from the core network 106. The action 1010 is similar to the action 510 in Fig. 5. Thus, details of the action 510 are omitted for brevity.

[0344] In some implementations, after the second network node 210 obtains the first FEC information about the PDU set from the core network 106, the first network node 210 may transmit the second FEC information to the second network node 220.

[0345] Then, the first network node 210 transmits 1020, to second network node 220, the first indication indicating to request the assistance information about the FEC based discard for the PDU set. In such implementations, the first network node 210 may transmit an SN of the PDU set to the second network node 220.

[0346] In some implementations, if the first network node 210 is implemented as an MN of the UE 104 and the second network node220 is implemented as an SN of the UE 104, then the first network node 210 may transmit the first indication via an S-NODE addition request message or an S-NODE modification request message.

[0347] Alternatively, in some implementations, if the first network node 210 is implemented as a CU of a gNB and the second network node 220 is implemented as a DU of the gNB, then the first network node 210 may transmit the first indication via an F1AP UE context setup request message or by an F1AP UE context modification request message.

[0348] Then, the first network node 210 receives 1030 the assistance information about the FEC based discard for the PDU set.

[0349] In some implementations, the assistance information about the FEC based discard for the PDU set may comprise a discard ratio or the first number of PDUs to be discarded for the PDU set which is to transmitted to the UE 104 by the second network node 220.

[0350] Alternatively, in some implementations, the assistance information about the FEC based discard for the PDU set may comprise the discard ratio for the PDU set.

[0351] Additionally, or alternatively, the assistance information about the FEC based discard for the PDU set may comprise the maximum discard ratio for the PDU set.

[0352] Additionally, or alternatively, in some implementations, the assistance information about the FEC based discard for the PDU set may comprise the congestion level of the second network node 220 for the PDU set.

[0353] Then, the first network node 210 performs 1040 the FEC based discard based on the assistance information about the FEC based discard for the PDU set. The action 1040 is similar to the action 830 in Fig. 8. Details of the action 1040 are omitted for brevity.

[0354] In turn, the first network node 210 performs 1050 transmission of the remaining PDUs to the UE 104. The action 1050 is similar to the action 950 in Fig. 9. Details of the action 1050 are omitted for brevity.

[0355] In turn, the second network node 220 performs 1060 transmission of PDUs to the UE 104.

[0356] In some implementations, the second network node 220 may receive the PDUs to be transmitted to the UE 104 from the first network node 210.

[0357] Fig. 11 illustrates a signaling diagram illustrating an example process 1100 that supports DL FEC based discard in accordance with some implementations of the present disclosure. The process 1100 may be considered as an example implementation of the process 800. The process 1100 may involve the UE 104, the core network 106, the first network node 210 and the second network node 220 in Fig. 2A or 2B. For the purpose of discussion, the process 1000 will be described with reference to Fig. 2A or 2B.

[0358] Generally, in the process 1100, the first network node 210 may be implemented as an MN of the UE 104 and the second network node 220 may be implemented as an SN of the UE 104. Alternatively, the first network node 210 may be implemented as a CU of a gNB and the second network node 220 may be implemented as a DU of the gNB.

[0359] Specifically, as shown in Fig. 11, the first network node 210 obtains 1110 third FEC information about a PSI value from the core network 106.

[0360] In some implementations, the action 1110 is similar to the action 710 in Fig. 7. Thus, details of the action 1110 are omitted for brevity.

[0361] In some implementations, after the second network node 210 obtains the third FEC information about the PSI value (for example, a PSI value of a QoS flow) from the core network 106, the first network node 210 may transmit the third FEC information to the second network node 220.

[0362] Then, the first network node 210 transmits 1120, to second network node 220, the first indication indicating to request the assistance information about the FEC based discard for the PSI value (for example, a PSI value of a QoS flow or a DRB).

[0363] In some implementations, the first network node 210 may transmit the PSI value to the second network node 220 for at least one PDU set with the PSI value.

[0364] In some implementations, if the first network node 210 is implemented as an MN of the UE 104 and the second network node220 is implemented as an SN of the UE 104, then the first network node 210 may transmit the first indication via an S-NODE addition request message or an S-NODE modification request message.

[0365] Alternatively, in some implementations, if the first network node 210 is implemented as a CU of a gNB and the second network node 220 is implemented as a DU of the gNB, then the first network node 210 may transmit the first indication via an F1AP UE context setup request message or by an F1AP UE context modification request message.

[0366] Then, the first network node 210 receives 1130 the assistance information about the FEC based discard for the PSI value.

[0367] In some implementations, if the first network node 210 transmits the PSI value to the second network node 220, the first network node 210 may receive, from the second network node 220, the PSI value together with the assistance information about the FEC based discard for the PSI value.

[0368] In some implementations, the assistance information about the FEC based discard for the PSI value may comprise at least one of the following: the discard ratio for the PSI value, or the maximum discard ratio for the PSI value.

[0369] Additionally, or alternatively, in some implementations, the assistance information about the FEC based discard for the PSI value may comprise the congestion level of the second network node 220.

[0370] In some implementations, if the first network node 210 transmits the first indication via an S-NODE addition request message or an S-NODE modification request, then the first network node 210 may receive the assistance information about the FEC based discard for the PSI value via an S-NODE addition acknowledge message or an S-NODE modification required message.

[0371] Alternatively, in some implementations, if the first network node 210 transmits the first indication via an F1AP UE context setup request message or an F1AP UE context modification request message, then the first network node 210 may receive the assistance information about the FEC based discard for the PSI value via an F1AP UE context setup response message or by an F1AP UE context modification response message.

[0372] Then, the first network node 210 performs 1140 the FEC based discard based on the assistance information about the FEC based discard for the PSI value. The action 1140 is similar to the action 830 in Fig. 8. Details of the action 1140 are omitted for brevity.

[0373] In turn, the first network node 210 performs 1150 transmission of the remaining PDUs to the UE 104.

[0374] In turn, the second network node 220 performs 1160 transmission of PDUs to the UE 104.

[0375] In some implementations, the second network node 220 may receive the PDUs to be transmitted to the UE 104 from the first network node 210.

[0376] It shall be understood that in the case of the first network node 210 is implemented as an MN of the UE104 and the second network node 220 is implemented as an SN of the UE 104, the processes 300, 400, 500, 700, 800, 900, and 1000 have been

described by taking MN terminated split bearer and MN terminated SCG bearer as example. The above mentioned processes may be applied to SN terminated bearer if the roles of MN and SN are exchanged. The SN terminated bearer may be SN terminated split bearer or SN terminated MCG bearer.

[0377] Fig. 12 illustrates a signaling diagram illustrating an example process 1200 that supports DL FEC based discard in accordance with some implementations of the present disclosure. The process 1200 may involve the UE 104, the core network 106, the first network node 210 and the second network node 220 in Fig. 2A. For the purpose of discussion, the process 300 will be described with reference to Fig. 2A.

[0378] Generally, in the process 1200, the first network node 210 may be implemented as a source gNB of the UE 104 and the second network node 220 may be implemented as a target gNB of the UE 104.

[0379] Specifically, as shown in Fig. 12, the first network node 210 obtains 1210 FEC information from the core network 106 before handover of the UE 104 from the first network node 210 to the second network node 220. Some implementations of obtaining the FEC information from the core network 106 have been described above with reference to Figs. 3-5 and 7. Details of such implementations are omitted for brevity.

[0380] In some implementations, before handover of the UE 104 from the first network node 210 to the second network node 220, the first network node 210 may receive a PDU set from a user plane function (UPF) in the core network 106. The first network node 210 may have performed FEC based discard of a PDU set before handover of the UE 104 from the first network node 210 to the second network node 220.

[0381] Then, the first network node 210 performs 1220 handover of the UE 104 to the second network node 220.

[0382] In some implementations, before the handover, all or part of PDUs in the PDU set may have not been transmitted to the UE 104 successfully by the first network node 210. The first network node 210 determines to forward the un-transmitted PDUs to the second network node 220. Since the first network node 210 have performed FEC based discard for the PDU set, the first network node 210 needs to transmit status information about the FEC based discard for the PDU set to the second network node 220.

[0383] In turn, the first network node 210 transmits 1230, to the second network node 220, the status information about the FEC based discard for the PDU set. All or part of PDUs in the PDU set is to be forwarded to the second network node 220.

[0384] In some implementations, the status information about the FEC based discard for the PDU set may comprise an indication indicating whether the FEC based discard has been performed for the PDU set by the first network node 210.

[0385] Additionally, or alternatively, the status information about the FEC based discard for the PDU set may comprise a percentage of PDUs in the PDU set which have been discarded by the first network node 210.

[0386] Additionally, or alternatively, the status information about the FEC based discard for the PDU set may comprise the number of the PDUs in the PDU set which have been discarded by the first network node 210. For example, a total number of PDUs in the PDU set is represented by N, and the number of the PDUs in the PDU set which have been discarded by the first network node 210 is represented by M. The first network node 210 may have discarded M PDUs among the N PDUs in the PDU set.

[0387] In some implementations, the first network node 210 may transmit a handover request message to the second network node 220. The handover request message may comprise the status information about the FEC based discard for the PDU set.

[0388] Alternatively, the first network node 210 may transmit an SN status transfer message to the second network node 220. The SN status transfer message may comprise the status information about the FEC based discard for the PDU set.

[0389] Alternatively, the first network node 210 may transmit the status information about the FEC based discard for the PDU set by user plane protocol. For example, the first network node 210 may transmit a RAN container of a GTP-U extension header to the second network node 220. The RAN container of the GTP-U extension header may comprise the status information. For example, the status information may be included in a downlink data delivery status frame of the RAN container of the GTP-U extension header.

[0390] Alternatively, the first network node 210 may transmit a PDU set container of a GTP-U extension header to the second network node 220. The PDU set container of the GTP-U extension header may comprise the status information about the FEC based

discard for the PDU set. For example, the status information may be included in a downlink data delivery status frame of the PDU set container of the GTP-U extension header.

[0391] In some implementations, the first network node 210 may transmit the FEC information to the second network node 220. Some implementations of transmitting the FEC information to the second network node 220 have been described above with reference to Figs. 3-5 and 7. Details of such implementations are omitted for brevity.

[0392] With the process 1200, coordination between a source network node and a target network node on the FEC based discard may be achieved to avoid the target network node to discard too many PDUs in a PDU set exceeding the allowed discard ratio. Thus, the UE can decode PDUs in the PDU set correctly.

[0393] Fig. 13 illustrates an example of a device 1300 that supports DL FEC based discard in accordance with aspects of the present disclosure. The device 1300 may be an example of a network entity 102 or a UE 104 as described herein. The device 1300 may support wireless communication with one or more network entities 102, UEs 104, or any combination thereof. The device 1300 may include components for bi-directional communications including components for transmitting and receiving communications, such as a processor 1302, a memory 1304, a transceiver 1306, and, optionally, an I/O controller 1308. These components may be in electronic communication or otherwise coupled (e.g., operatively, communicatively, functionally, electronically, electrically) via one or more interfaces (e.g., buses).

[0394] The processor 1302, the memory 1304, the transceiver 1306, or various combinations thereof or various components thereof may be examples of means for performing various aspects of the present disclosure as described herein. For example, the processor 1302, the memory 1304, the transceiver 1306, or various combinations or components thereof may support a method for performing one or more of the operations described herein.

[0395] In some implementations, the processor 1302, the memory 1304, the transceiver 1306, or various combinations or components thereof may be implemented in hardware (e.g., in communications management circuitry). The hardware may include a processor, a digital signal processor (DSP), an application-specific integrated circuit

(ASIC), a field-programmable gate array (FPGA) or other programmable logic device, a discrete gate or transistor logic, discrete hardware components, or any combination thereof configured as or otherwise supporting a means for performing the functions described in the present disclosure. In some implementations, the processor 1302 and the memory 1304 coupled with the processor 1302 may be configured to perform one or more of the functions described herein (e.g., executing, by the processor 1302, instructions stored in the memory 1304).

[0396] For example, the processor 1302 may support wireless communication at the device 1300 in accordance with examples as disclosed herein. The processor 1302 may be configured to operable to support a means for performing the following: obtaining FEC information from a core network; determining, based on the FEC information, first information about PDUs to be discarded by the first network node and a second network node; and determining, based on the first information, second information about at least one first PDU to be discarded by the first network node and third information about at least one second PDU to be discarded by the second network node; transmitting the third information to the second network node; and discarding the at least one first PDU based on the second information.

[0397] Alternatively, in some implementations, the processor 1302 may be configured to operable to support a means for performing the following: transmitting, to a second network node, a first indication indicating that FEC based discard is to be performed by the first network node; receiving, from the second network node, assistance information about the FEC based discard; and performing the FEC based discard based on the assistance information.

[0398] Alternatively, in some implementations, the processor 1302 may be configured to operable to support a means for performing the following: obtaining forward error correction (FEC) information from a core network before handover of a UE from the first network node to a second network node; performing handover of the UE to the second network node; and transmitting, to the second network node, status information about the FEC based discard for a PDU set which is to be forwarded to the second network node.

[0399] Alternatively, in some implementations, the processor 1302 may be configured to operable to support a means for performing the following: receiving, from

a first network node, third information about at least one second PDU to be discarded by the second network node; and discarding the at least one first PDU based on the third information.

[0400] Alternatively, in some implementations, the processor 1302 may be configured to operable to support a means for performing the following: receiving, from a first network node, a first indication indicating that FEC based discard is to be performed by the first network node; and transmitting, to the first network node, assistance information about the FEC based discard.

[0401] Alternatively, in some implementations, the processor 1302 may be configured to operable to support a means for performing the following: performing handover of a UE from a first network node to the second network node; and receiving, from the first network node, status information about FEC based discard for a PDU set which is to be forwarded to the second network node.

[0402] The processor 1302 may include an intelligent hardware device (e.g., a general-purpose processor, a DSP, a CPU, a microcontroller, an ASIC, an FPGA, a programmable logic device, a discrete gate or transistor logic component, a discrete hardware component, or any combination thereof). In some implementations, the processor 1302 may be configured to operate a memory array using a memory controller. In some other implementations, a memory controller may be integrated into the processor 1302. The processor 1302 may be configured to execute computer-readable instructions stored in a memory (e.g., the memory 1304) to cause the device 1300 to perform various functions of the present disclosure.

[0403] The memory 1304 may include random access memory (RAM) and read-only memory (ROM). The memory 1304 may store computer-readable, computer-executable code including instructions that, when executed by the processor 1302 cause the device 1300 to perform various functions described herein. The code may be stored in a non-transitory computer-readable medium such as system memory or another type of memory. In some implementations, the code may not be directly executable by the processor 1302 but may cause a computer (e.g., when compiled and executed) to perform functions described herein. In some implementations, the memory 1304 may include, among other things, a basic I/O system (BIOS) which may control basic hardware or software operation such as the interaction with peripheral components or devices.

[0404] The I/O controller 1308 may manage input and output signals for the device 1300. The I/O controller 1308 may also manage peripherals not integrated into the device M02. In some implementations, the I/O controller 1308 may represent a physical connection or port to an external peripheral. In some implementations, the I/O controller 1308 may utilize an operating system such as iOS®, ANDROID®, MS-WINDOWS®, OS/2®, UNIX®, LINUX®, or another known operating system. In some implementations, the I/O controller 1308 may be implemented as part of a processor, such as the processor 1306. In some implementations, a user may interact with the device 1300 via the I/O controller 1308 or via hardware components controlled by the I/O controller 1308.

[0405] In some implementations, the device 1300 may include a single antenna 1310. However, in some other implementations, the device 1300 may have more than one antenna 1310 (i.e., multiple antennas), including multiple antenna panels or antenna arrays, which may be capable of concurrently transmitting or receiving multiple wireless transmissions. The transceiver 1306 may communicate bi-directionally, via the one or more antennas 1310, wired, or wireless links as described herein. For example, the transceiver 1306 may represent a wireless transceiver and may communicate bi-directionally with another wireless transceiver. The transceiver 1306 may also include a modem to modulate the packets, to provide the modulated packets to one or more antennas 1310 for transmission, and to demodulate packets received from the one or more antennas 1310. The transceiver 1306 may include one or more transmit chains, one or more receive chains, or a combination thereof.

[0406] A transmit chain may be configured to generate and transmit signals (e.g., control information, data, packets). The transmit chain may include at least one modulator for modulating data onto a carrier signal, preparing the signal for transmission over a wireless medium. The at least one modulator may be configured to support one or more techniques such as amplitude modulation (AM), frequency modulation (FM), or digital modulation schemes like phase-shift keying (PSK) or quadrature amplitude modulation (QAM). The transmit chain may also include at least one power amplifier configured to amplify the modulated signal to an appropriate power level suitable for transmission over the wireless medium. The transmit chain may also include one or more antennas 1310 for transmitting the amplified signal into the air or wireless medium.

[0407] A receive chain may be configured to receive signals (e.g., control information, data, packets) over a wireless medium. For example, the receive chain may include one or more antennas 1310 for receive the signal over the air or wireless medium. The receive chain may include at least one amplifier (e.g., a low-noise amplifier (LNA)) configured to amplify the received signal. The receive chain may include at least one demodulator configured to demodulate the receive signal and obtain the transmitted data by reversing the modulation technique applied during transmission of the signal. The receive chain may include at least one decoder for decoding the processing the demodulated signal to receive the transmitted data.

[0408] Fig. 14 illustrates a flowchart of a method 1400 that supports DL FEC based discard in accordance with aspects of the present disclosure. The operations of the method 1400 may be implemented by a device or its components as described herein. For example, the operations of the method 1400 may be performed by the first network node 210 as described herein. In some implementations, the device may execute a set of instructions to control the function elements of the device to perform the described functions. Additionally, or alternatively, the device may perform aspects of the described functions using special-purpose hardware.

[0409] At 1410, the method may include obtaining FEC information from a core network. The operations of 1410 may be performed in accordance with examples as described herein. In some implementations, aspects of the operations of 1410 may be performed by a device as described with reference to Fig. 2A or 2B.

[0410] At 1420, the method may include determining, based on the FEC information, first information about PDUs to be discarded by the first network node and a second network node. The operations of 1420 may be performed in accordance with examples as described herein. In some implementations, aspects of the operations of 1420 may be performed by a device as described with reference to Fig. 2A or 2B.

[0411] At 1430, the method may include determining, based on the first information, second information about at least one first PDU to be discarded by the first network node and third information about at least one second PDU to be discarded by the second network node. The operations of 1430 may be performed in accordance with examples as described herein. In some implementations, aspects of the operations of 1430 may be performed by a device as described with reference to Fig. 2A or 2B.

[0412] At 1440, the method may include transmitting the third information to the second network node. The operations of 1440 may be performed in accordance with examples as described herein. In some implementations, aspects of the operations of 1440 may be performed by a device as described with reference to Fig. 2A or 2B.

[0413] At 1450, the method may include discarding the at least one first PDU based on the second information. The operations of 1450 may be performed in accordance with examples as described herein. In some implementations, aspects of the operations of 1450 may be performed by a device as described with reference to Fig. 2A or 2B.

[0414] Fig. 15 illustrates a flowchart of a method 1500 that supports DL FEC based discard in accordance with aspects of the present disclosure. The operations of the method 1500 may be implemented by a device or its components as described herein. For example, the operations of the method 1500 may be performed by the first network node 210 as described herein. In some implementations, the device may execute a set of instructions to control the function elements of the device to perform the described functions. Additionally, or alternatively, the device may perform aspects of the described functions using special-purpose hardware.

[0415] At 1510, the method may include transmitting, to a second network node, a first indication indicating that FEC based discard is to be performed by the first network node. The operations of 1510 may be performed in accordance with examples as described herein. In some implementations, aspects of the operations of 1510 may be performed by a device as described with reference to Fig. 2A or 2B.

[0416] At 1520, the method may include receiving, from the second network node, assistance information about the FEC based discard. The operations of 1520 may be performed in accordance with examples as described herein. In some implementations, aspects of the operations of 1520 may be performed by a device as described with reference to Fig. 2A or 2B.

[0417] At 1530, the method may include performing the FEC based discard based on the assistance information. The operations of 1530 may be performed in accordance with examples as described herein. In some implementations, aspects of the operations of 1530 may be performed by a device as described with reference to Fig. 2A or 2B.

[0418] Fig. 16 illustrates a flowchart of a method 1600 that supports DL FEC based discard in accordance with aspects of the present disclosure. The operations of the method 1600 may be implemented by a device or its components as described herein. For example, the operations of the method 1600 may be performed by the first network node 210 as described herein. In some implementations, the device may execute a set of instructions to control the function elements of the device to perform the described functions. Additionally, or alternatively, the device may perform aspects of the described functions using special-purpose hardware.

[0419] At 1610, the method may include obtaining FEC information from a core network before handover of a UE from the first network node to a second network node. The operations of 1610 may be performed in accordance with examples as described herein. In some implementations, aspects of the operations of 1610 may be performed by a device as described with reference to Fig. 2A or 2B.

[0420] At 1620, the method may include performing handover of the UE to the second network node. The operations of 1620 may be performed in accordance with examples as described herein. In some implementations, aspects of the operations of 1620 may be performed by a device as described with reference to Fig. 2A or 2B.

[0421] At 1630, the method may include transmitting, to the second network node, status information about the FEC based discard for a PDU set. At least part of PDUs in the PDU set is to be forwarded to the second network node. The operations of 1630 may be performed in accordance with examples as described herein. In some implementations, aspects of the operations of 1630 may be performed by a device as described with reference to Fig. 2A or 2B.

[0422] Fig. 17 illustrates a flowchart of a method 1700 that supports DL FEC based discard in accordance with aspects of the present disclosure. The operations of the method 1700 may be implemented by a device or its components as described herein. For example, the operations of the method 1700 may be performed by the second network node 220 as described herein. In some implementations, the device may execute a set of instructions to control the function elements of the device to perform the described functions. Additionally, or alternatively, the device may perform aspects of the described functions using special-purpose hardware.

[0423] At 1710, the method may include receiving, from a first network node, third information about at least one second PDU to be discarded by the second network node. The operations of 1710 may be performed in accordance with examples as described herein. In some implementations, aspects of the operations of 1710 may be performed by a device as described with reference to Fig. 2A or 2B.

[0424] At 1720, the method may include discarding the at least one first PDU based on the third information. The operations of 1720 may be performed in accordance with examples as described herein. In some implementations, aspects of the operations of 1720 may be performed by a device as described with reference to Fig. 2A or 2B.

[0425] Fig. 18 illustrates a flowchart of a method 1800 that supports DL FEC based discard in accordance with aspects of the present disclosure. The operations of the method 1800 may be implemented by a device or its components as described herein. For example, the operations of the method 1800 may be performed by the second network node 220 as described herein. In some implementations, the device may execute a set of instructions to control the function elements of the device to perform the described functions. Additionally, or alternatively, the device may perform aspects of the described functions using special-purpose hardware.

[0426] At 1810, the method may include receiving, from a first network node, a first indication indicating that FEC based discard is to be performed by the first network node. The operations of 1810 may be performed in accordance with examples as described herein. In some implementations, aspects of the operations of 1810 may be performed by a device as described with reference to Fig. 2A or 2B.

[0427] At 1820, the method may include transmitting, to the first network node, assistance information about the FEC based discard. The operations of 1820 may be performed in accordance with examples as described herein. In some implementations, aspects of the operations of 1820 may be performed by a device as described with reference to Fig. 2A or 2B.

[0428] Fig. 19 illustrates a flowchart of a method 1900 that supports DL FEC based discard in accordance with aspects of the present disclosure. The operations of the method 1900 may be implemented by a device or its components as described herein. For example, the operations of the method 1900 may be performed by the second network node 220 as

described herein. In some implementations, the device may execute a set of instructions to control the function elements of the device to perform the described functions. Additionally, or alternatively, the device may perform aspects of the described functions using special-purpose hardware.

[0429] At 1910, the method may include performing handover of a UE from a first network node to the second network node. The operations of 1910 may be performed in accordance with examples as described herein. In some implementations, aspects of the operations of 1910 may be performed by a device as described with reference to Fig. 2A or 2B.

[0430] At 1920, the method may include receiving, from the first network node, status information about FEC based discard for a PDU set. At least part of PDUs in the PDU set is to be forwarded to the second network node. The operations of 1920 may be performed in accordance with examples as described herein. In some implementations, aspects of the operations of 1920 may be performed by a device as described with reference to Fig. 2A or 2B.

[0431] It shall be noted that implementations of the present disclosure which have been described with reference to Figs. 1 to 12 are also applicable to the device 1300 as well as the methods 1400 to 1900.

[0432] It should be noted that the methods described herein describes possible implementations, and that the operations and the steps may be rearranged or otherwise modified and that other implementations are possible. Further, aspects from two or more of the methods may be combined.

[0433] The various illustrative blocks and components described in connection with the disclosure herein may be implemented or performed with a general-purpose processor, a DSP, an ASIC, a CPU, an FPGA or other programmable logic device, discrete gate or transistor logic, discrete hardware components, or any combination thereof designed to perform the functions described herein. A general-purpose processor may be a microprocessor, but in the alternative, the processor may be any processor, controller, microcontroller, or state machine. A processor may also be implemented as a combination of computing devices (e.g., a combination of a DSP and a microprocessor, multiple

microprocessors, one or more microprocessors in conjunction with a DSP core, or any other such configuration.

[0434] The functions described herein may be implemented in hardware, software executed by a processor, firmware, or any combination thereof. If implemented in software executed by a processor, the functions may be stored on or transmitted over as one or more instructions or code on a computer-readable medium. Other examples and implementations are within the scope of the disclosure and appended claims. For example, due to the nature of software, functions described herein may be implemented using software executed by a processor, hardware, firmware, hardwiring, or combinations of any of these. Features implementing functions may also be physically located at various positions, including being distributed such that portions of functions are implemented at different physical locations.

[0435] Computer-readable media includes both non-transitory computer storage media and communication media including any medium that facilitates transfer of a computer program from one place to another. A non-transitory storage medium may be any available medium that may be accessed by a general-purpose or special-purpose computer. By way of example, non-transitory computer-readable media may include RAM, ROM, electrically erasable programmable ROM (EEPROM), flash memory, compact disk (CD) ROM or other optical disk storage, magnetic disk storage or other magnetic storage devices, or any other non-transitory medium that may be used to carry or store desired program code means in the form of instructions or data structures and that may be accessed by a general-purpose or special-purpose computer, or a general-purpose or special-purpose processor.

[0436] As used herein, including in the claims, an article "a" before an element is unrestricted and understood to refer to "at least one" of those elements or "one or more" of those elements. The terms "a," "at least one," "one or more," and "at least one of one or more" may be interchangeable. As used herein, including in the claims, "or" as used in a list of items (e.g., a list of items prefaced by a phrase such as "at least one of" or "one or more of" or "one or both of") indicates an inclusive list such that, for example, a list of at least one of A, B, or C means A or B or C or AB or AC or BC or ABC (i.e., A and B and C). Also, as used herein, the phrase "based on" shall not be construed as a reference to a closed set of conditions. For example, an example step that is described as "based on

condition A" may be based on both a condition A and a condition B without departing from the scope of the present disclosure. In other words, as used herein, the phrase "based on" shall be construed in the same manner as the phrase "based at least in part on. Further, as used herein, including in the claims, a "set" may include one or more elements.

[0437] The description herein is provided to enable a person having ordinary skill in the art to make or use the disclosure. Various modifications to the disclosure will be apparent to a person having ordinary skill in the art, and the generic principles defined herein may be applied to other variations without departing from the scope of the disclosure. Thus, the disclosure is not limited to the examples and designs described herein but is to be accorded the broadest scope consistent with the principles and novel features disclosed herein.

WHAT IS CLAIMED IS:

1. A first network node, comprising:

at least one memory; and

at least one processor coupled with the at least one memory and configured to cause the first network node to:

obtain forward error correction (FEC) information from a core network;

determine, based on the FEC information, first information about protocol data units (PDUs) to be discarded by the first network node and a second network node; and

determine, based on the first information, second information about at least one first PDU to be discarded by the first network node and third information about at least one second PDU to be discarded by the second network node;

transmit the third information to the second network node; and

discard the at least one first PDU based on the second information.

2. The first network node of claim 1, wherein the FEC information comprises first FEC information about a quality of service (QoS) flow, and the first FEC information comprises at least one of the following:

an indication indicating whether FEC is to be applied to the QoS flow,

an FEC encoding type which is to be applied to the QoS flow,

a redundant ratio for the QoS flow, or

a first identifier of the QoS flow.

3. The first network node of claim 1, wherein the first information comprises a total discard ratio related to both the first network node and the second network node;

the second information comprises a first discard ratio related to the first network node; and

the third information comprises a second discard ratio related to the second network node.

4. The first network node of claim 3, wherein the total discard ratio is equal to a percentage of PDUs which are to be discarded or which are allowed to be discarded by

the first network node and the second network node, the PDUs are to be transmitted to a user equipment (UE) by the first network node and the second network node;

the first discard ratio is equal to a first percentage of a first plurality of PDUs which are to be discarded or which are allowed to be discarded by the first network node, the first plurality of PDUs are to be transmitted to the UE by the first network node; and

the second discard ratio is equal to a second percentage of a second plurality of PDUs which are to be discarded or which are allowed to be discarded by the second network node, wherein the second plurality of PDUs are to be transmitted to the UE by the second network node.

5. The first network node of claim 3, wherein each of the total discard ratio, the first discard ratio and the second discard ratio is for one of the following to which FEC is to be applied:

a quality of service (QoS) flow,

each of at least one protocol data unit set importance (PSI) value, or

each of at least one PDU set.

6. The first network node of claim 4, wherein only the QoS flow is mapped to a DRB; and

wherein the first network node is further caused to:

determine a total discard ratio for the DRB as the total discard ratio for the QoS flow.

7. The first network node of claim 1, wherein the first network node comprises a master node of a user equipment (UE) and the second network node comprises a secondary node of the UE.

8. The first network node of claim 1, wherein the first network node comprises a central unit (CU) of a gNodeB (gNB) and the second network node comprises a distributed unit (DU) of the gNB.

9. A first network node, comprising:

at least one memory; and

at least one processor coupled with the at least one memory and configured to cause the first network node to:

transmit, to a second network node, a first indication indicating that forward error correction (FEC) based discard is to be performed by the first network node;

receive, from the second network node, assistance information about the FEC based discard; and

perform the FEC based discard based on the assistance information.

10. The first network node of claim 9, wherein the first indication indicates that the FEC based discard is to be performed for one of the following:

a quality of service (QoS) flow,

a data radio bearer (DRB) to which the QoS flow is mapped,

a protocol data unit set importance (PSI) value, or

a PDU set.

11. The first network node of claim 9, wherein the first indication further indicates to request the assistance information about the FEC based discard.

12. The first network node of claim 11, wherein the first indication further indicates to request the assistance information about the FEC based discard for one of the following:

a quality of service (QoS) flow,

a data radio bearer (DRB) to which the QoS flow is mapped,

a protocol data unit set importance (PSI) value, or

a PDU set.

13. The first network node of claim 9, wherein the assistance information about the FEC based discard comprises at least one of the following:

a discard ratio for the PDUs which are to transmitted to a user equipment (UE) by the second network node,

a maximum discard ratio for the PDUs which are to transmitted to the UE by the second network node,

a first number of protocol data units (PDUs) to be discarded for a PDU set which is to transmitted to a user equipment (UE) by the second network node,

a maximum number of PDUs to be discarded for the PDU set, or

a congestion level of the second network node.

14. The first network node of claim 9, wherein the assistance information about the FEC based discard is for one of the following:

a quality of service (QoS) flow, or

a data radio bearer (DRB) to which the QoS flow is mapped.

15. The first network node of claim 9, wherein the first network node is caused to receive the assistance information about the FEC based discard by receiving one of the following comprising the assistance information:

an S-NODE modification required message,

an S-NODE addition acknowledge message,

an F1AP UE context setup response message,

an F1AP UE context modification response message,

a radio access network (RAN) container of a general packet radio service (GPRS) tunnel protocol-user plane (GTP-U) extension header, or

a PDU set container of the GTP-U extension header.

16. The first network node of claim 9, wherein the first network node comprises a master node of a user equipment (UE) and the second network node comprises a secondary node of the UE.

17. The first network node of claim 9, wherein the first network node comprises a central unit (CU) of a gNodeB (gNB) and the second network node comprises a distributed unit (DU) of the gNB.

18. A first network node, comprising:

at least one memory; and

at least one processor coupled with the at least one memory and configured to cause the first network node to:

obtain forward error correction (FEC) information from a core network before handover of a user equipment (UE) from the first network node to a second network node;

perform handover of the UE to the second network node; and

transmit, to the second network node, status information about the FEC based discard for a protocol data unit (PDU) set, wherein at least part of PDUs in the PDU set is to be forwarded to the second network node.

19. The first network node of claim 18, wherein the status information about the FEC based discard for the PDU set comprises at least one of the following:

an indication indicating whether the FEC based discard has been performed for the PDU set by the first network node,

a percentage of PDUs in the PDU set which have been discarded by the first network node,

the number of the PDUs in the PDU set which have been discarded by the first network node.

20. The first network node of claim 18, wherein the first network node is caused to transmit the status information about the FEC based discard for the PDU set by transmitting one of the following comprising the status information:

a handover request message,

a secondary node (SN) status transfer message,

a radio access network (RAN) container of a general packet radio service (GPRS) tunnel protocol-user plane (GTP-U) extension header, or

a PDU set container of the GTP-U extension header.

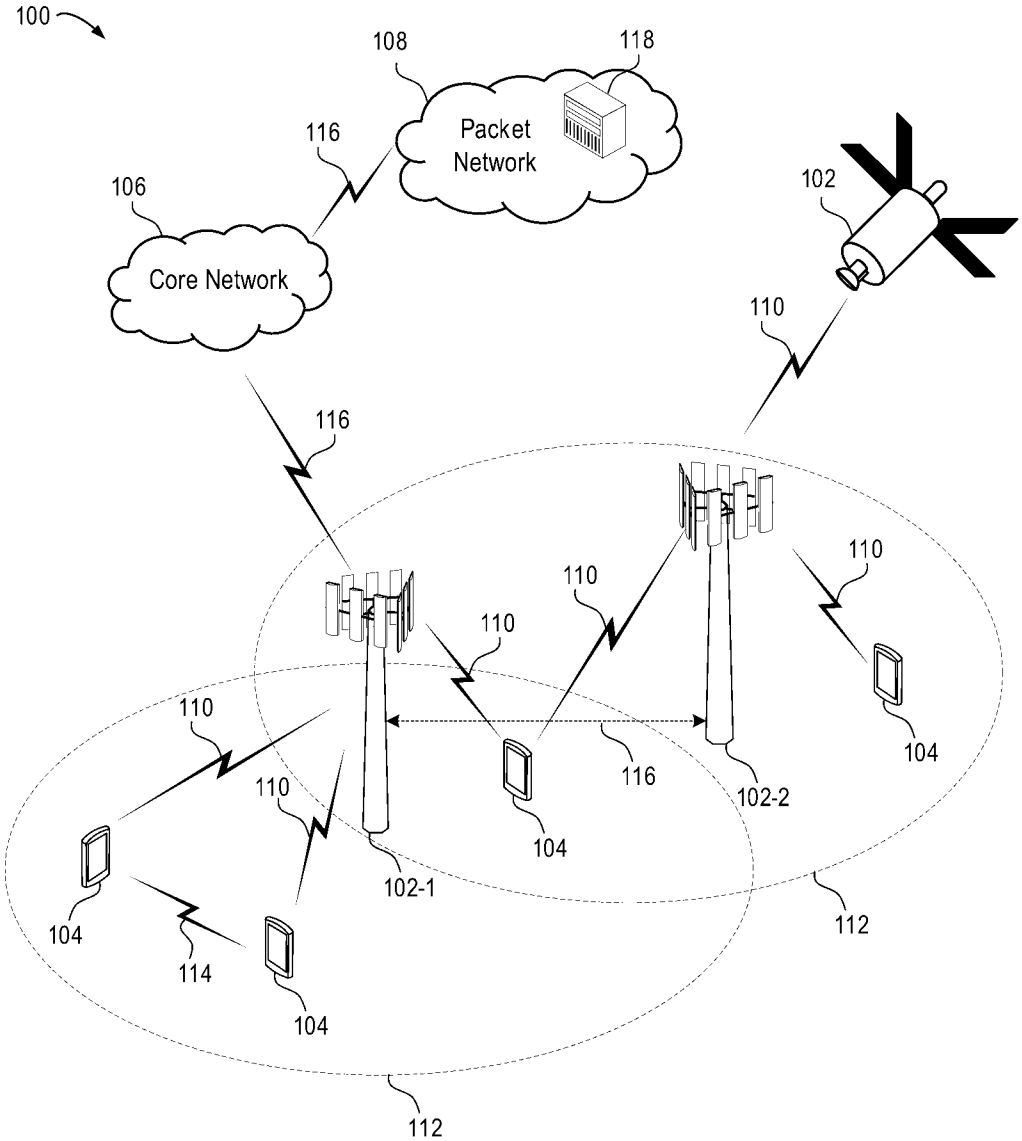
100
108
118
Packet
Network
116
106
Core Network
102
110
116
110
110
110
110
110
104
116
102-2
104
102-1
104
114
104
112
112

Fig. 1

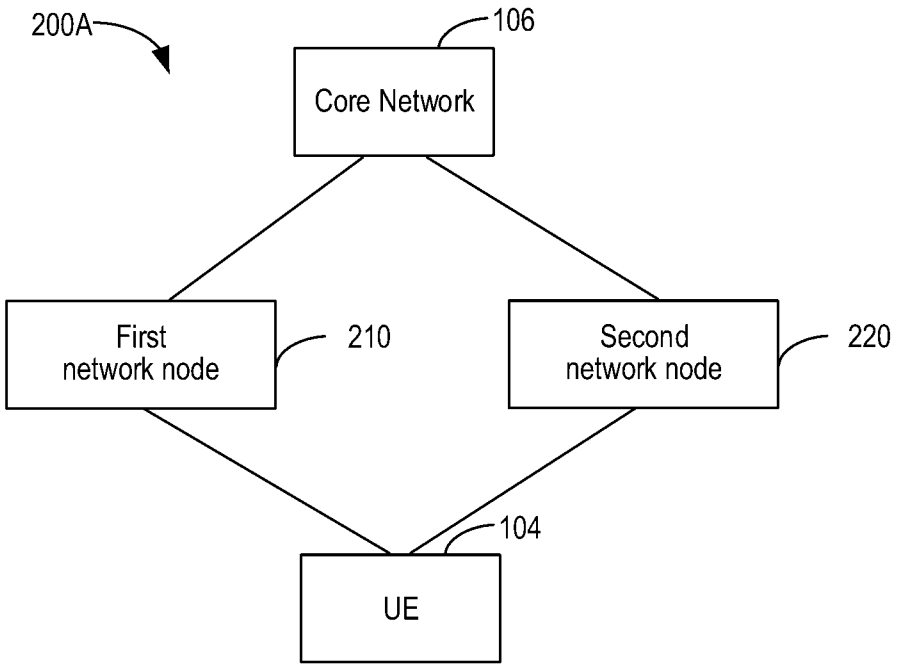
200A
106
Core Network
First
network node
210
Second
network node
220
104
UE

Fig. 2A

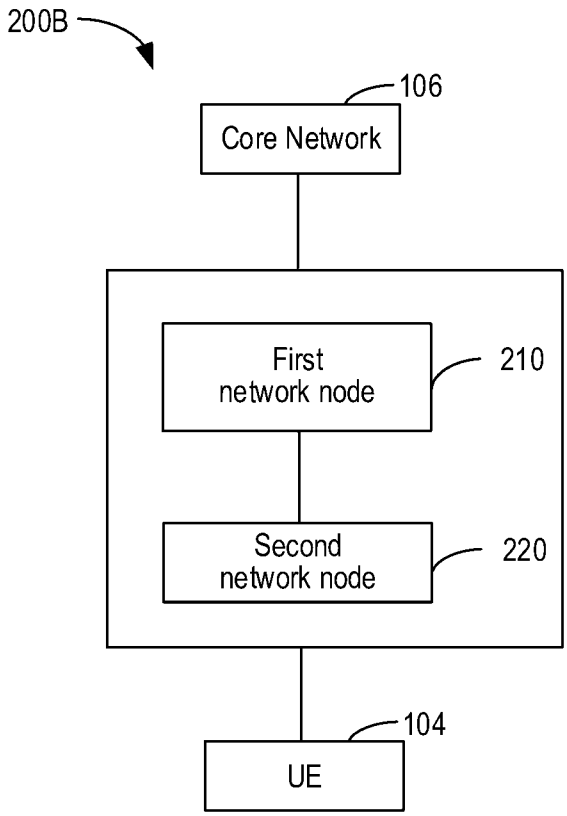
200B
106
Core Network
First
network node
210
Second
network node
220
104
UE

Fig. 2B

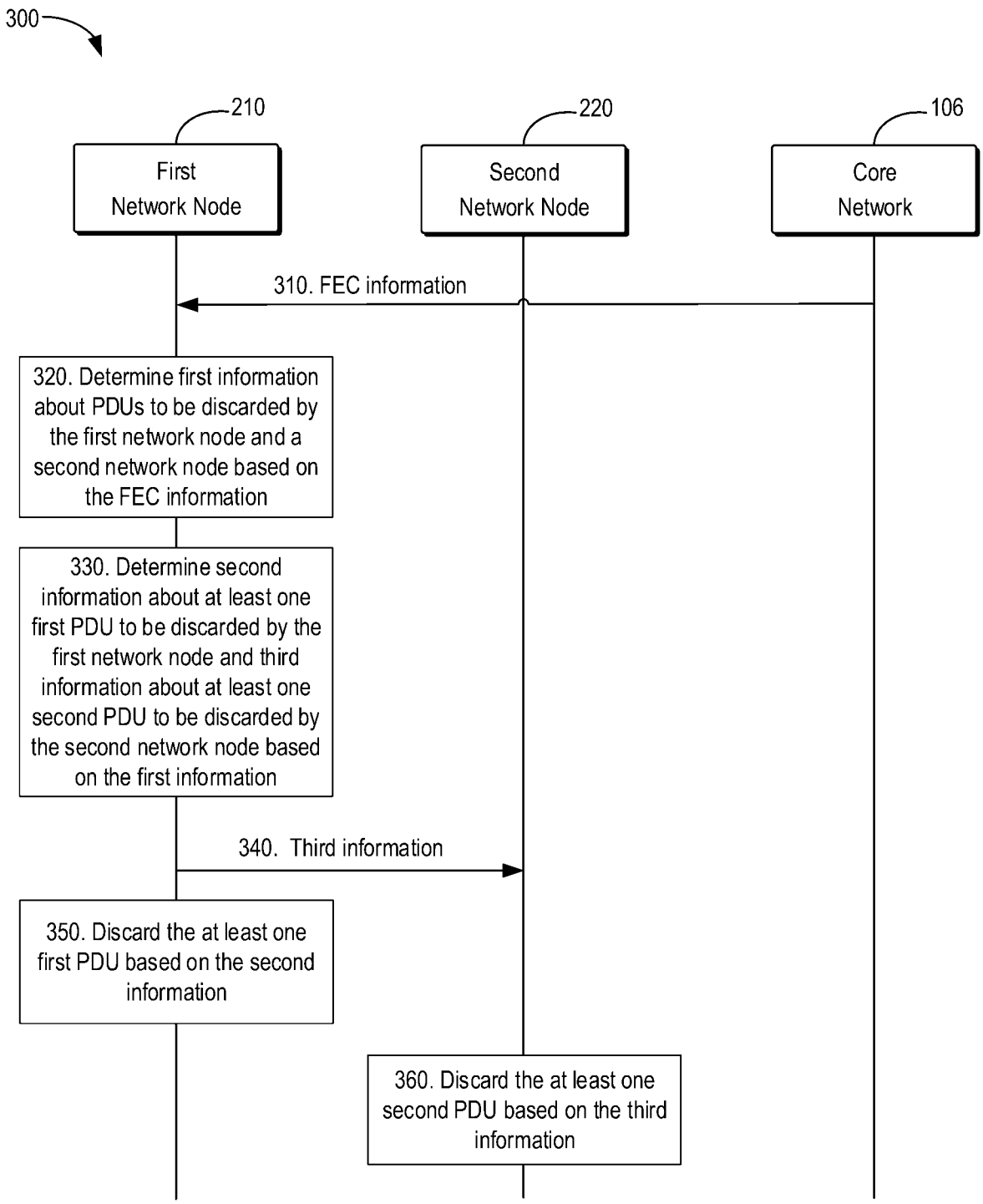
300
210
220
106
First Network Node
Second Network Node
Core Network
310. FEC information
320. Determine first information about PDUs to be discarded by the first network node and a second network node based on the FEC information
330. Determine second information about at least one first PDU to be discarded by the first network node and third information about at least one second PDU to be discarded by the second network node based on the first information
340. Third information
350. Discard the at least one first PDU based on the second information
360. Discard the at least one second PDU based on the third information

Fig. 3

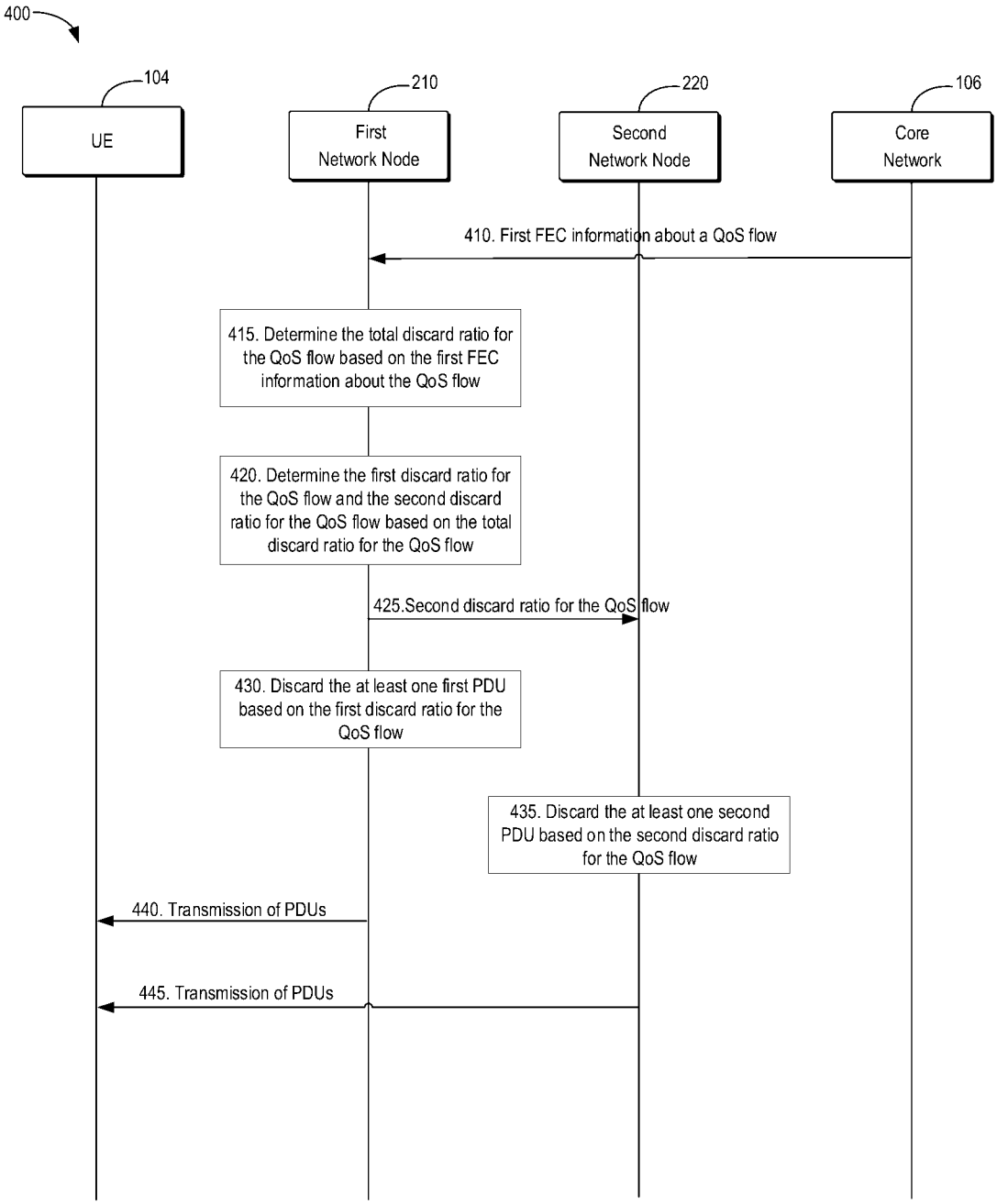
400
104
UE
210
First Network Node
220
Second Network Node
106
Core Network
410. First FEC information about a QoS flow
415. Determine the total discard ratio for the QoS flow based on the first FEC information about the QoS flow
420. Determine the first discard ratio for the QoS flow and the second discard ratio for the QoS flow based on the total discard ratio for the QoS flow
425.Second discard ratio for the QoS flow
430. Discard the at least one first PDU based on the first discard ratio for the QoS flow
435. Discard the at least one second PDU based on the second discard ratio for the QoS flow
440. Transmission of PDUs
445. Transmission of PDUs

Fig. 4

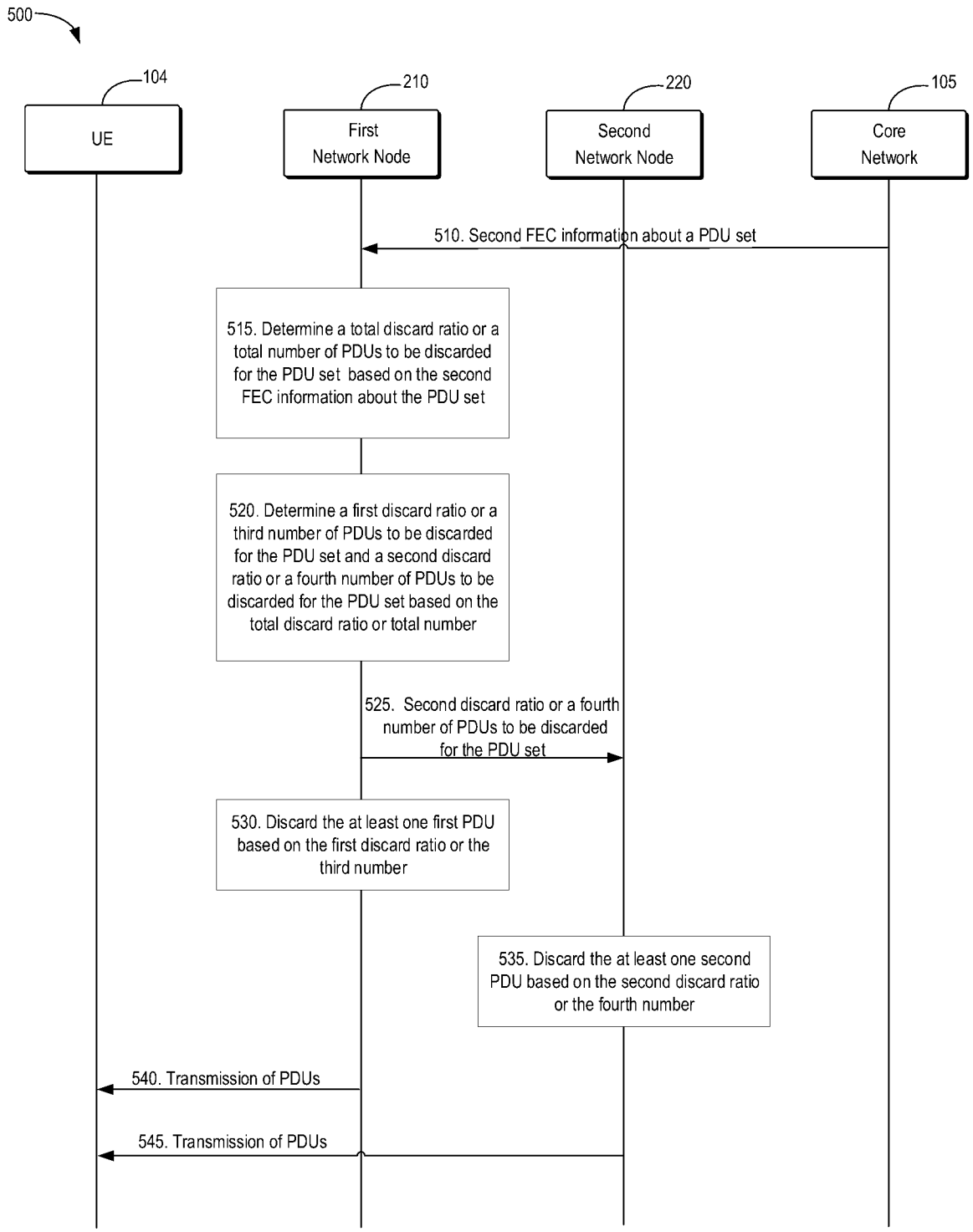
500
104
UE
210
First Network Node
220
Second Network Node
105
Core Network
510. Second FEC information about a PDU set
515. Determine a total discard ratio or a total number of PDUs to be discarded for the PDU set based on the second FEC information about the PDU set
520. Determine a first discard ratio or a third number of PDUs to be discarded for the PDU set and a second discard ratio or a fourth number of PDUs to be discarded for the PDU set based on the total discard ratio or total number
525. Second discard ratio or a fourth number of PDUs to be discarded for the PDU set
530. Discard the at least one first PDU based on the first discard ratio or the third number
535. Discard the at least one second PDU based on the second discard ratio or the fourth number
540. Transmission of PDUs
545. Transmission of PDUs

Fig. 5

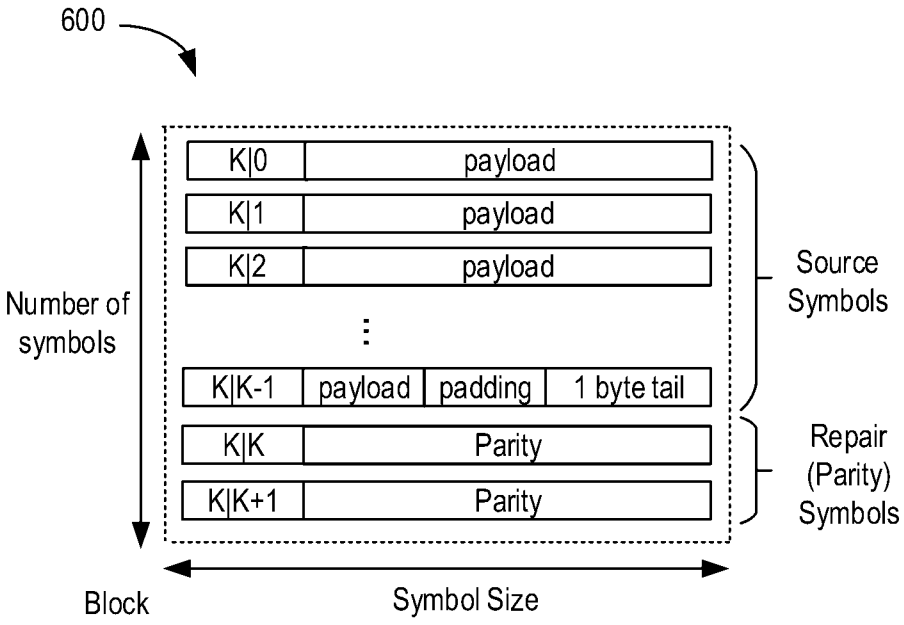
600
K|0
payload
K|1
payload
K|2
payload
K|K-1
payload
padding
1 byte tail
K|K
Parity
K|K+1
Parity
Number of symbols
Source Symbols
Repair (Parity) Symbols
Block
Symbol Size

Fig. 6

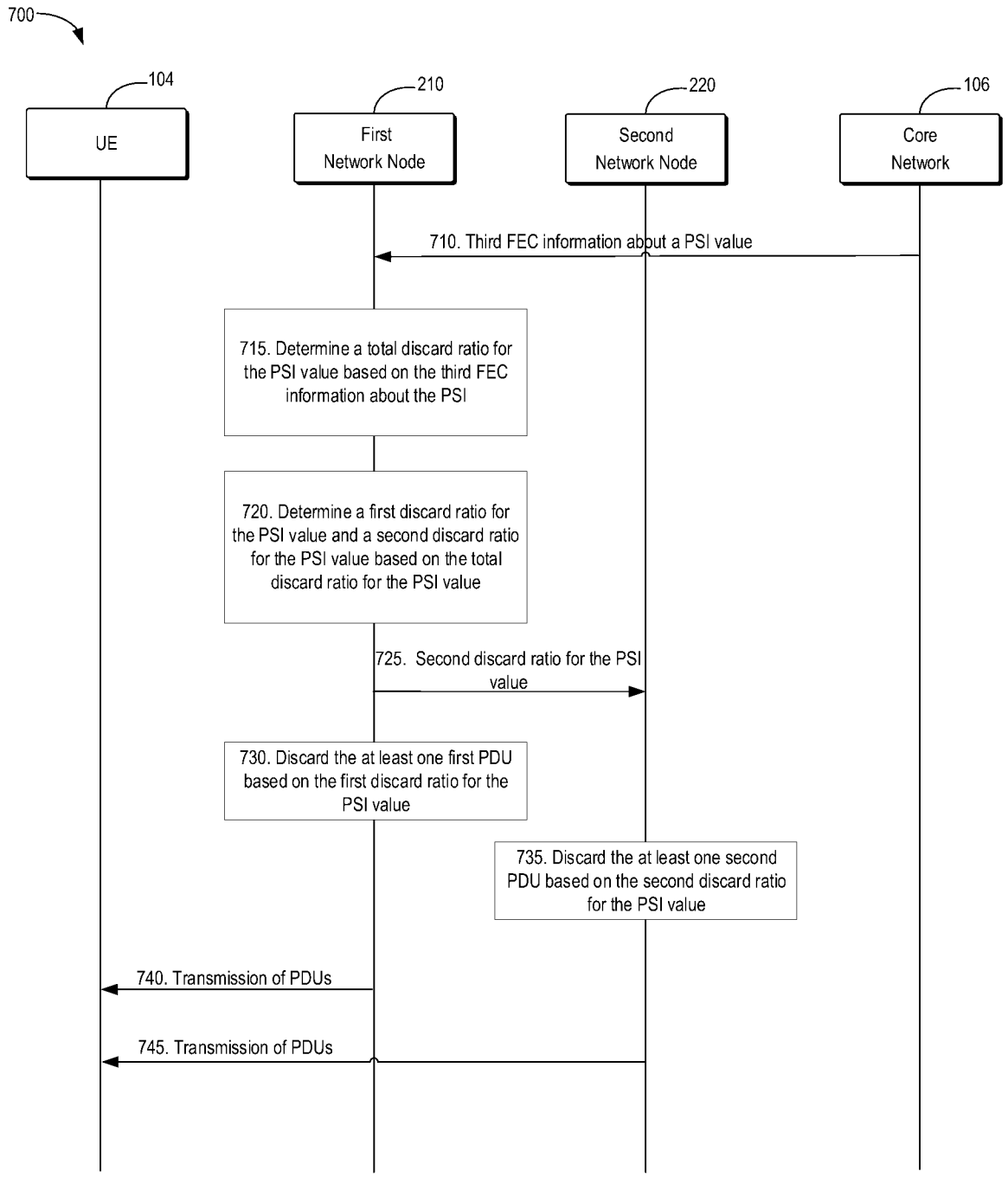
700
104
UE
210
First Network Node
220
Second Network Node
106
Core Network
710. Third FEC information about a PSI value
715. Determine a total discard ratio for the PSI value based on the third FEC information about the PSI
720. Determine a first discard ratio for the PSI value and a second discard ratio for the PSI value based on the total discard ratio for the PSI value
725. Second discard ratio for the PSI value
730. Discard the at least one first PDU based on the first discard ratio for the PSI value
735. Discard the at least one second PDU based on the second discard ratio for the PSI value
740. Transmission of PDUs
745. Transmission of PDUs

Fig. 7

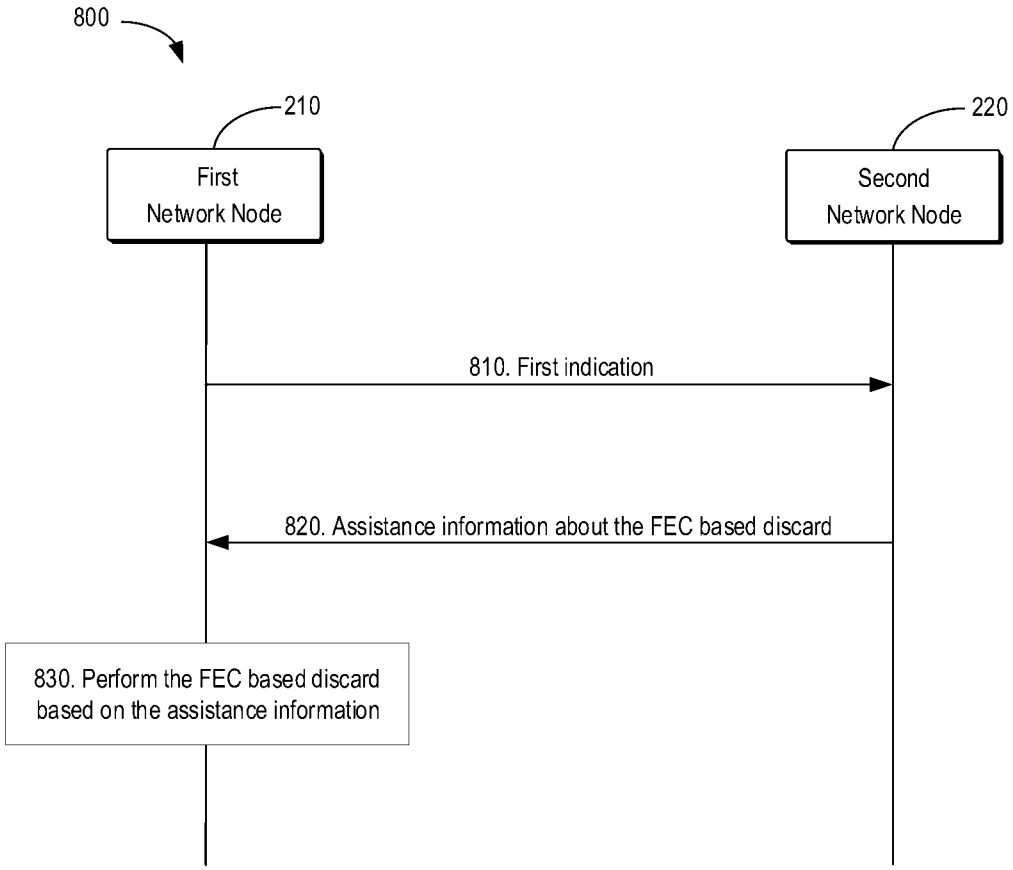
800
210
First
Network Node
220
Second
Network Node
810. First indication
820. Assistance information about the FEC based discard
830. Perform the FEC based discard
based on the assistance information

Fig. 8

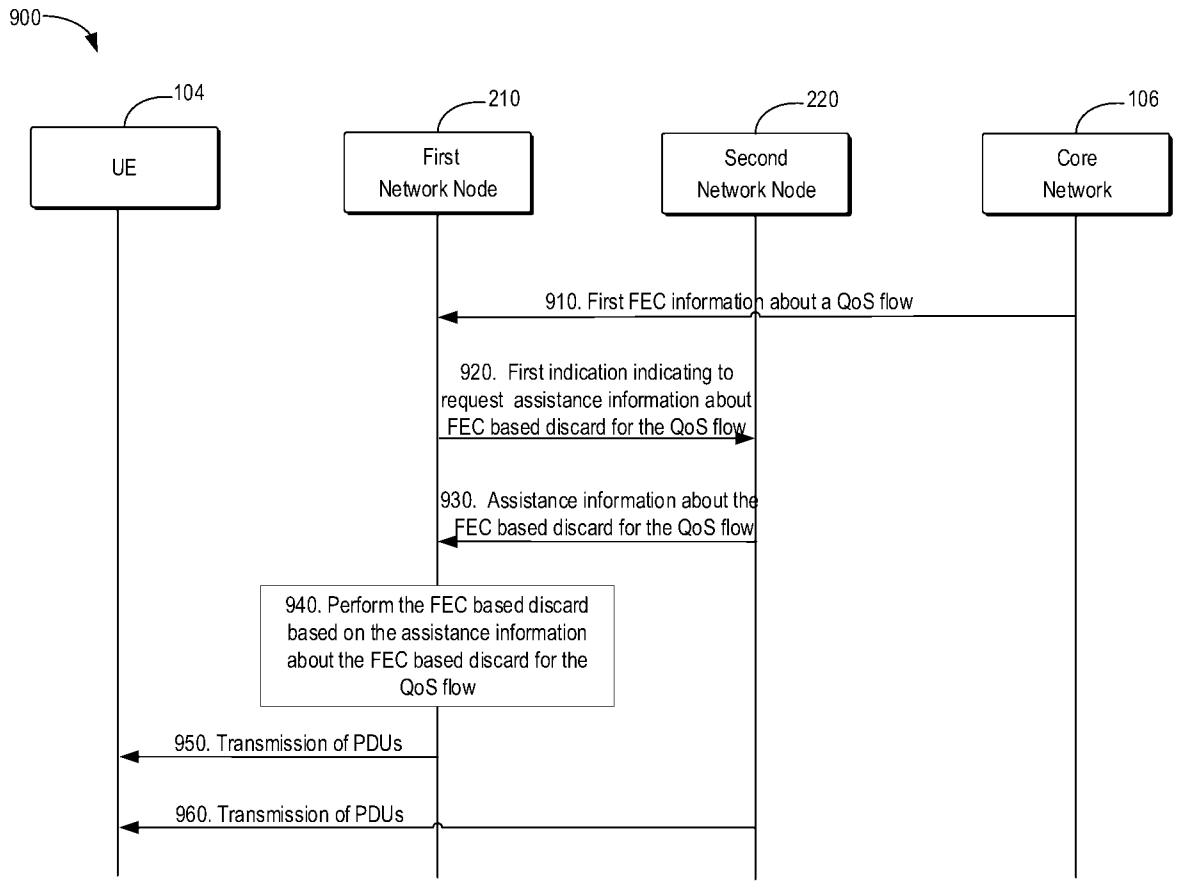
900
104
UE
210
First Network Node
220
Second Network Node
106
Core Network
910. First FEC information about a QoS flow
920. First indication indicating to request assistance information about FEC based discard for the QoS flow
930. Assistance information about the FEC based discard for the QoS flow
940. Perform the FEC based discard based on the assistance information about the FEC based discard for the QoS flow
950. Transmission of PDUs
960. Transmission of PDUs

Fig. 9

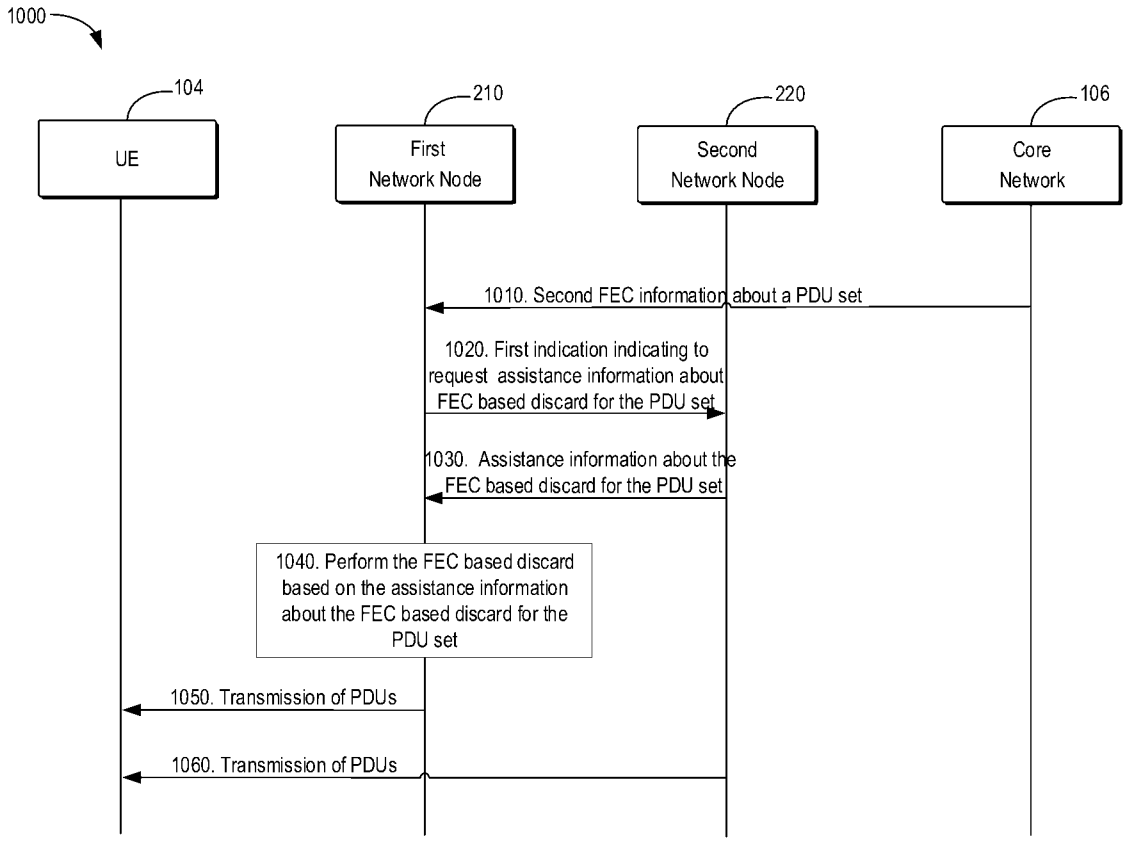
1000
104
UE
210
First
Network Node
220
Second
Network Node
106
Core
Network
1010. Second FEC information about a PDU set
1020. First indication indicating to request assistance information about FEC based discard for the PDU set
1030. Assistance information about the FEC based discard for the PDU set
1040. Perform the FEC based discard based on the assistance information about the FEC based discard for the PDU set
1050. Transmission of PDUs
1060. Transmission of PDUs

Fig. 10

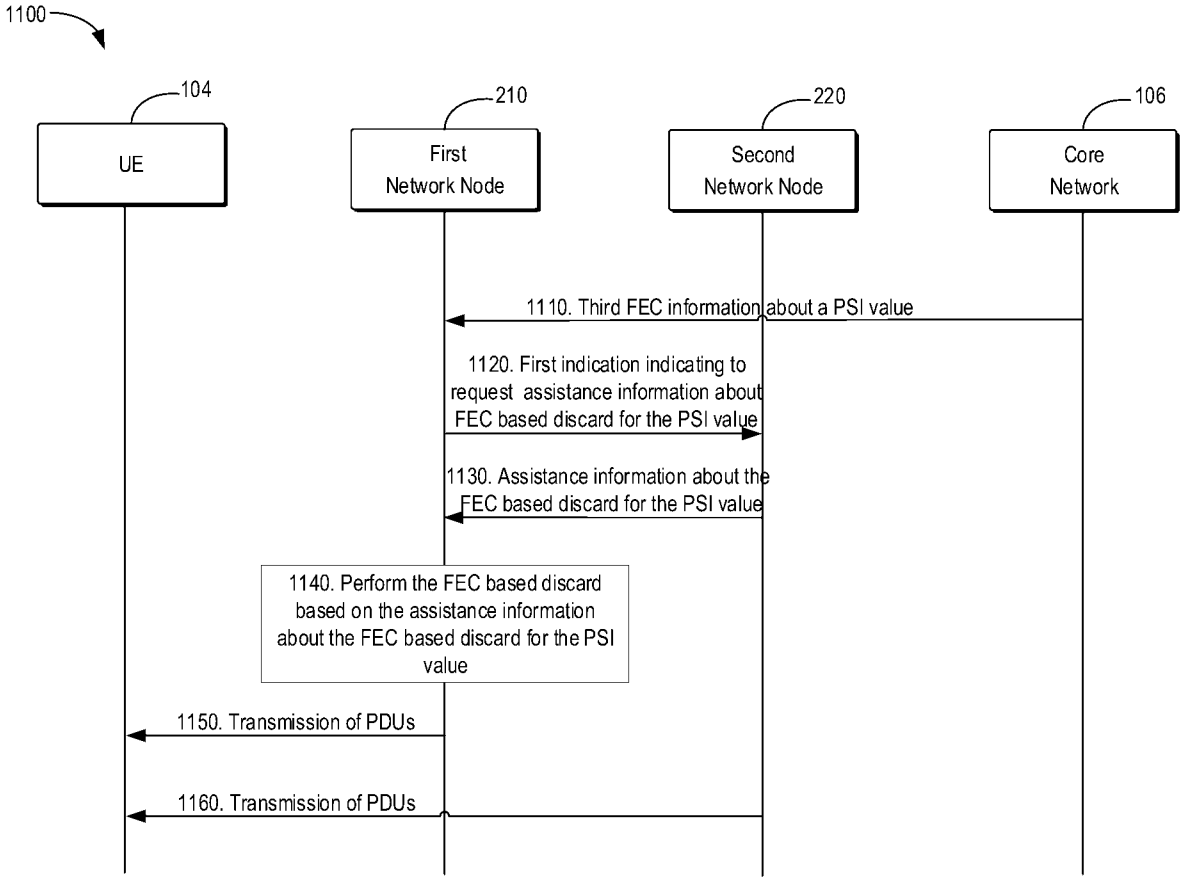
1100
104
UE
210
First Network Node
220
Second Network Node
106
Core Network
1110. Third FEC information about a PSI value
1120. First indication indicating to request assistance information about FEC based discard for the PSI value
1130. Assistance information about the FEC based discard for the PSI value
1140. Perform the FEC based discard based on the assistance information about the FEC based discard for the PSI value
1150. Transmission of PDUs
1160. Transmission of PDUs

Fig. 11

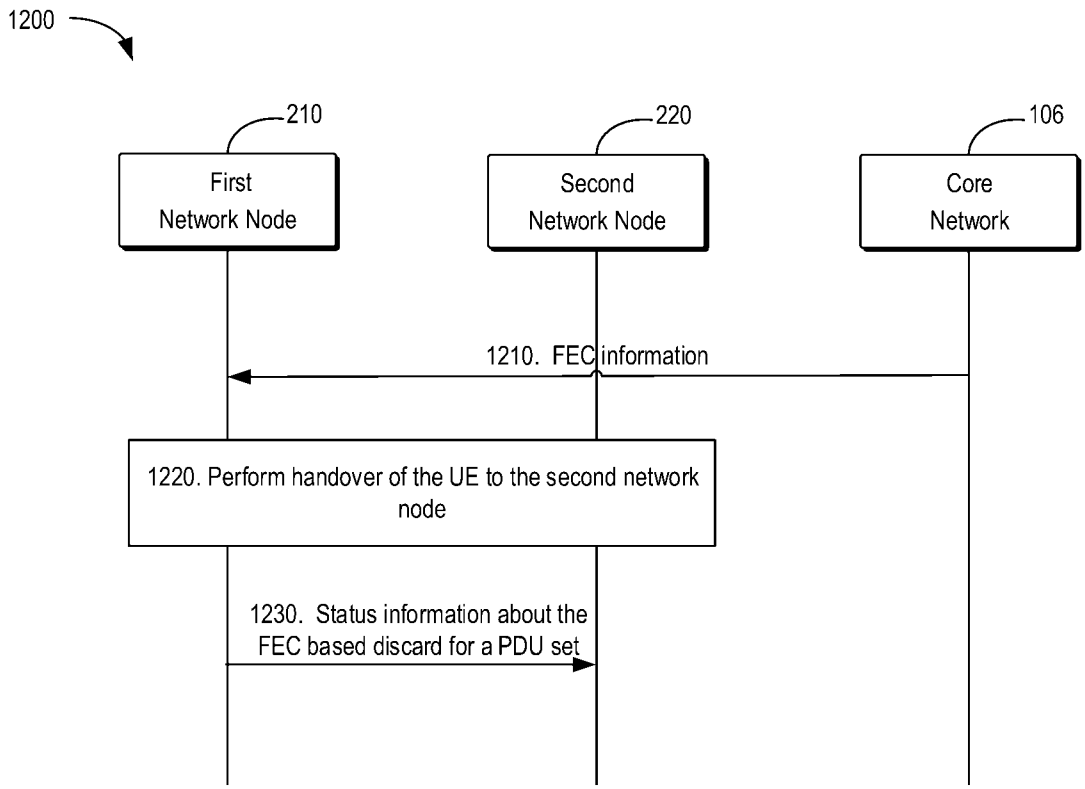
1200
210
220
106
First Network Node
Second Network Node
Core Network
1210. FEC information
1220. Perform handover of the UE to the second network node
1230. Status information about the FEC based discard for a PDU set

Fig. 12

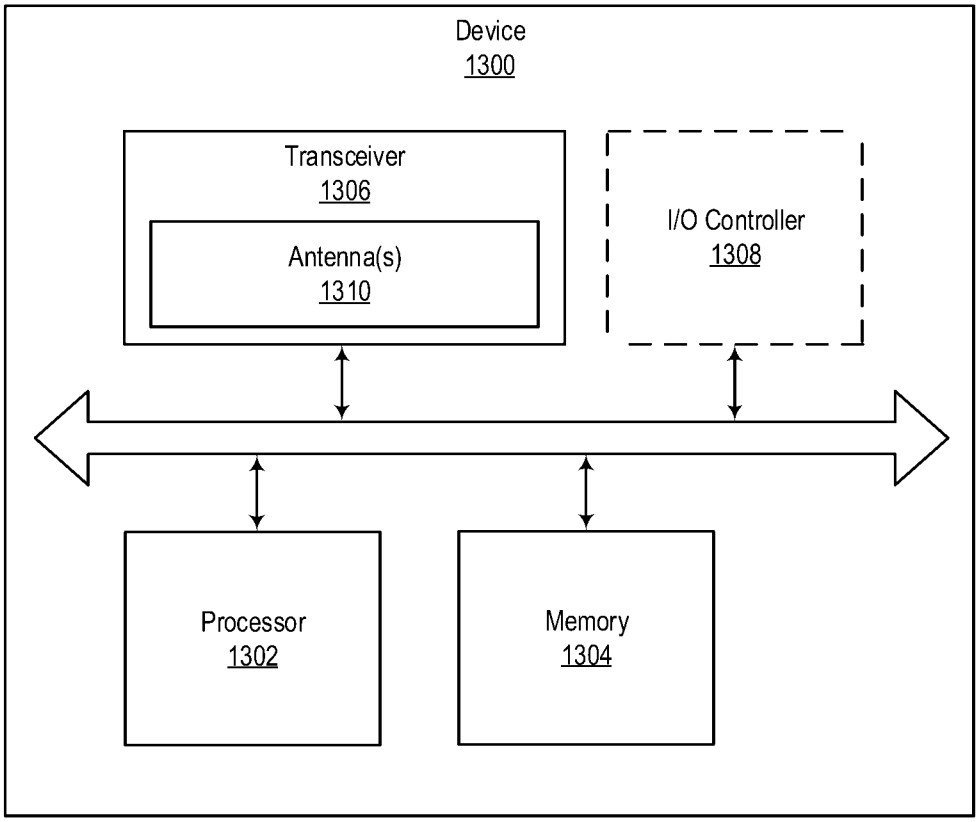
Device
1300
Transceiver
1306
Antenna(s)
1310
I/O Controller
1308
Processor
1302
Memory
1304

Fig. 13

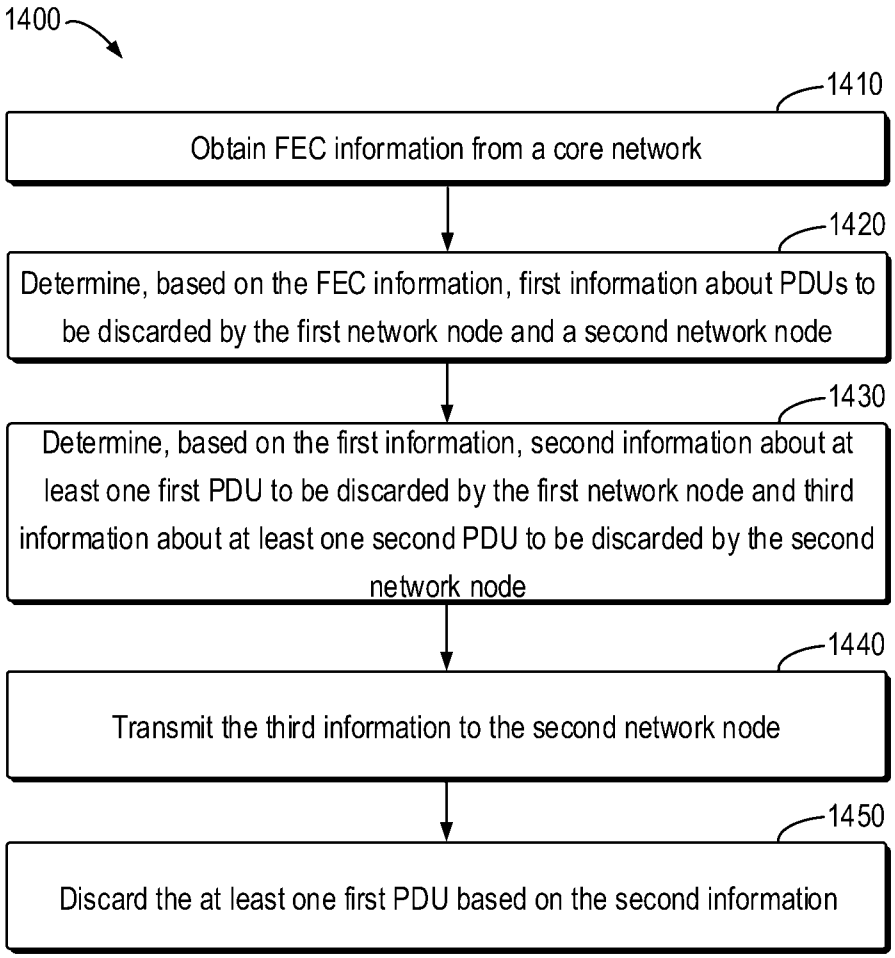
1400
1410
Obtain FEC information from a core network
1420
Determine, based on the FEC information, first information about PDUs to be discarded by the first network node and a second network node
1430
Determine, based on the first information, second information about at least one first PDU to be discarded by the first network node and third information about at least one second PDU to be discarded by the second network node
1440
Transmit the third information to the second network node
1450
Discard the at least one first PDU based on the second information

Fig. 14

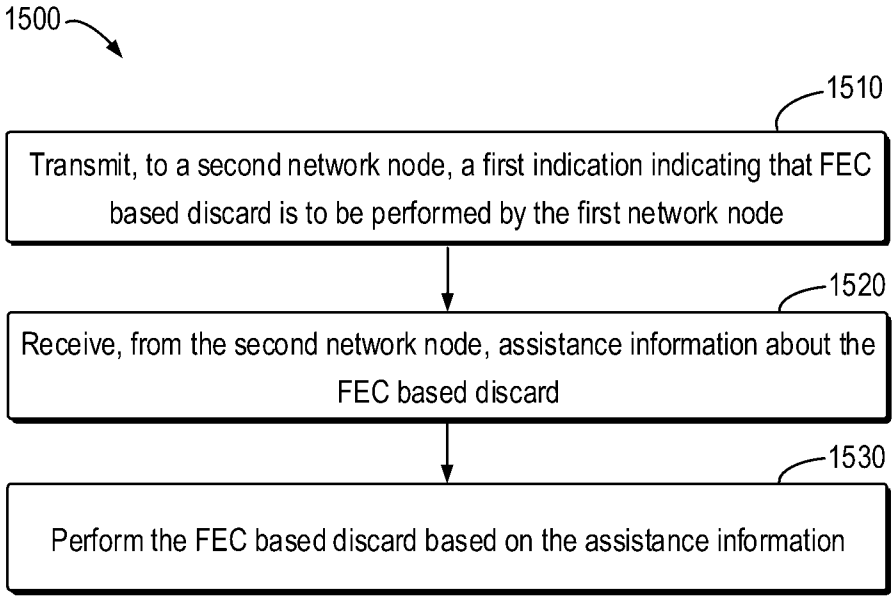
1500
1510
Transmit, to a second network node, a first indication indicating that FEC based discard is to be performed by the first network node
1520
Receive, from the second network node, assistance information about the FEC based discard
1530
Perform the FEC based discard based on the assistance information

Fig.15

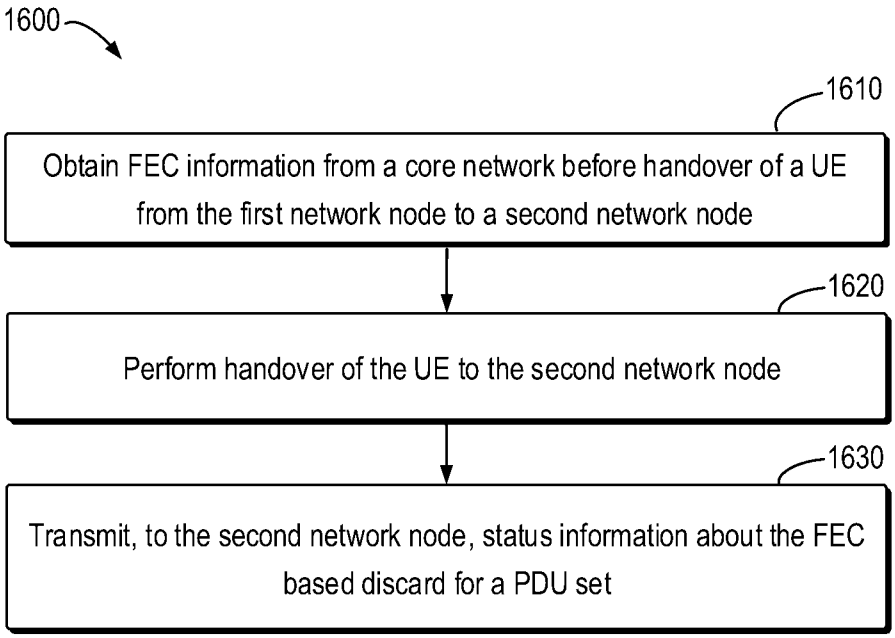
1600
1610
Obtain FEC information from a core network before handover of a UE from the first network node to a second network node
1620
Perform handover of the UE to the second network node
1630
Transmit, to the second network node, status information about the FEC based discard for a PDU set

Fig.16

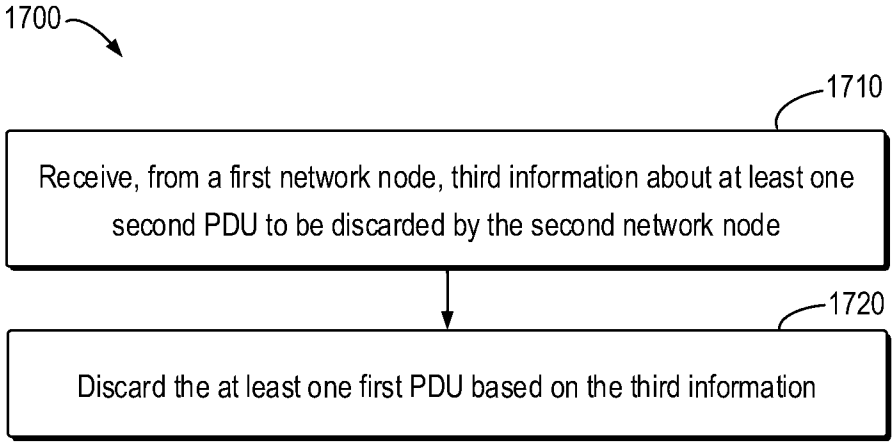

Fig.17

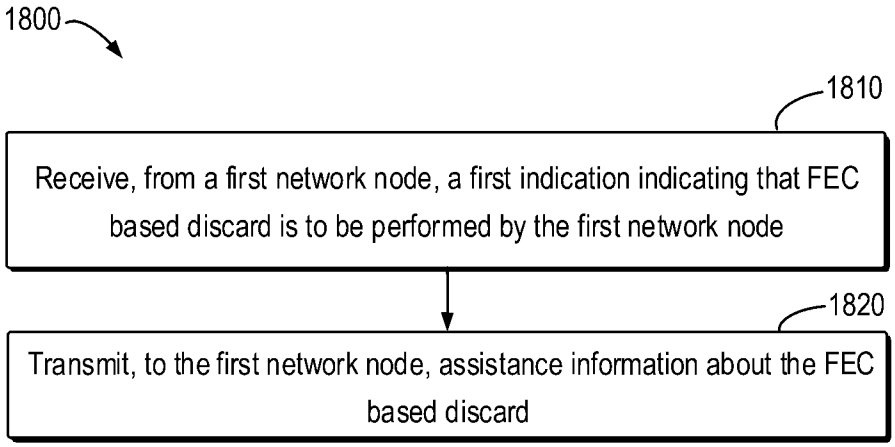

Fig.18

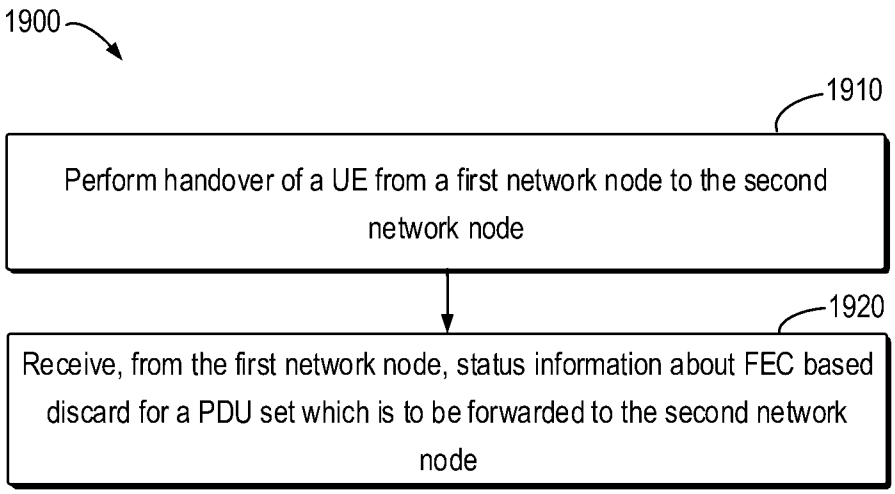

Fig.19

INTERNATIONAL SEARCH REPORT

International application No.
PCT/CN2024/076444

A. CLASSIFICATION OF SUBJECT MATTER

H04W28/24(2009.01)i

According to International Patent Classification (IPC) or to both national classification and IPC

B. FIELDS SEARCHED

Minimum documentation searched (classification system followed by classification symbols)

IPC: H04L H04W

Documentation searched other than minimum documentation to the extent that such documents are included in the fields searched

Electronic data base consulted during the international search (name of data base and, where practicable, search terms used)

CNABS;CNTXT;VEN;WOTXT;EPTXT;USTXT;CNKI;3GPP;IEEE:PDU, discard+, drop+, FEC, QoS, PSI, DRB, congest+

C. DOCUMENTS CONSIDERED TO BE RELEVANT

Category*	Citation of document, with indication, where appropriate, of the relevant passages	Relevant to claim No.
X	CN 116868619 A (BEIJING XIAOMI MOBILE SOFTWARE CO., LTD.) 10 October 2023 (2023-10-10) description paragraphs 49-77, 109-131, 334 and 345	9-12
A	Intel Corporation. "R2-2211380 Packet discard for XR traffic" *3GPP tsg_ran\wg2_rl2,* No. tsgr2_120, 03 November 2022 (2022-11-03), the whole document	1-20
A	WO 2024007301 A1 (LENOVO BEIJING LTD.) 11 January 2024 (2024-01-11) the whole document	1-20
A	CN 116349289 A (BEIJING XIAOMI MOBILE SOFTWARE CO., LTD.) 27 June 2023 (2023-06-27) the whole document	1-20
A	CN 116057997 A (QUALCOMM INCORPORATED) 02 May 2023 (2023-05-02) the whole document	1-20

☐ Further documents are listed in the continuation of Box C. ☑ See patent family annex.

* Special categories of cited documents:
"A" document defining the general state of the art which is not considered to be of particular relevance
"D" document cited by the applicant in the international application
"E" earlier application or patent but published on or after the international filing date
"L" document which may throw doubts on priority claim(s) or which is cited to establish the publication date of another citation or other special reason (as specified)
"O" document referring to an oral disclosure, use, exhibition or other means
"P" document published prior to the international filing date but later than the priority date claimed

"T" later document published after the international filing date or priority date and not in conflict with the application but cited to understand the principle or theory underlying the invention
"X" document of particular relevance; the claimed invention cannot be considered novel or cannot be considered to involve an inventive step when the document is taken alone
"Y" document of particular relevance; the claimed invention cannot be considered to involve an inventive step when the document is combined with one or more other such documents, such combination being obvious to a person skilled in the art
"&" document member of the same patent family

Date of the actual completion of the international search	Date of mailing of the international search report
18 September 2024	**18 September 2024**
Name and mailing address of the ISA/CN **CHINA NATIONAL INTELLECTUAL PROPERTY ADMINISTRATION** **6, Xitucheng Rd., Jimen Bridge, Haidian District, Beijing 100088, China**	Authorized officer **YANG,HongLi** Telephone No. **(+86) 010-62411277**

INTERNATIONAL SEARCH REPORT
Information on patent family members

International application No.
PCT/CN2024/076444

Patent document cited in search report			Publication date (day/month/year)	Patent family member(s)			Publication date (day/month/year)
CN	116868619	A	10 October 2023	None			
WO	2024007301	A1	11 January 2024	None			
CN	116349289	A	27 June 2023	None			
CN	116057997	A	02 May 2023	US	2022060925	A1	24 February 2022
				US	11974341	B2	30 April 2024
				EP	4201150	A1	28 June 2023
				WO	2022040338	A1	24 February 2022