2 Sheets—Sheet 1.

J. R. LAWRENCE.

TOBACCO PACKING-MACHINES.

No. 193,666. Patented July 31, 1877.

Fig 1.

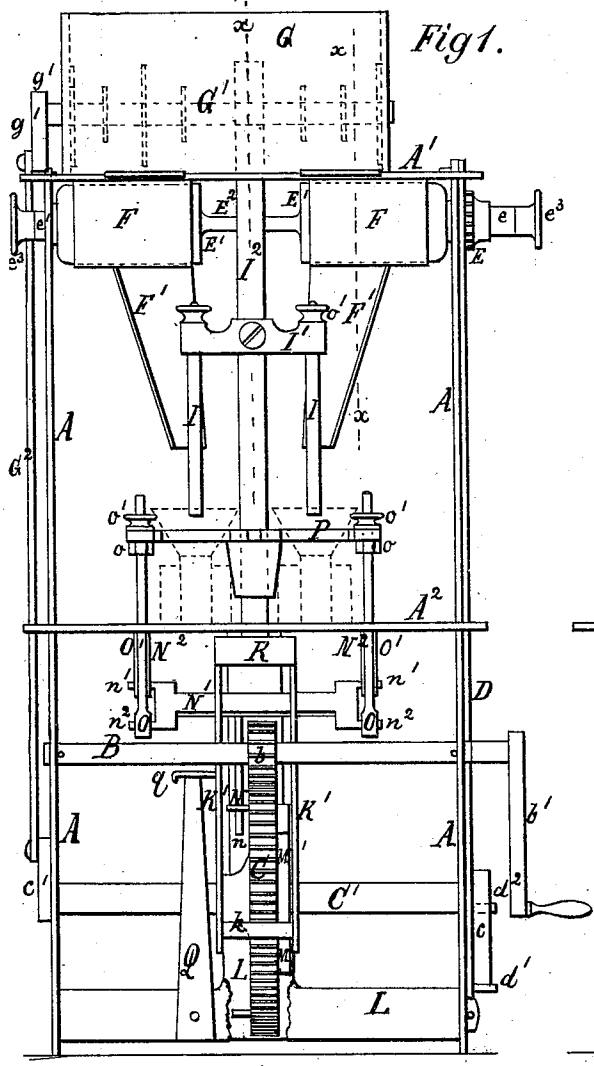

Fig 2.

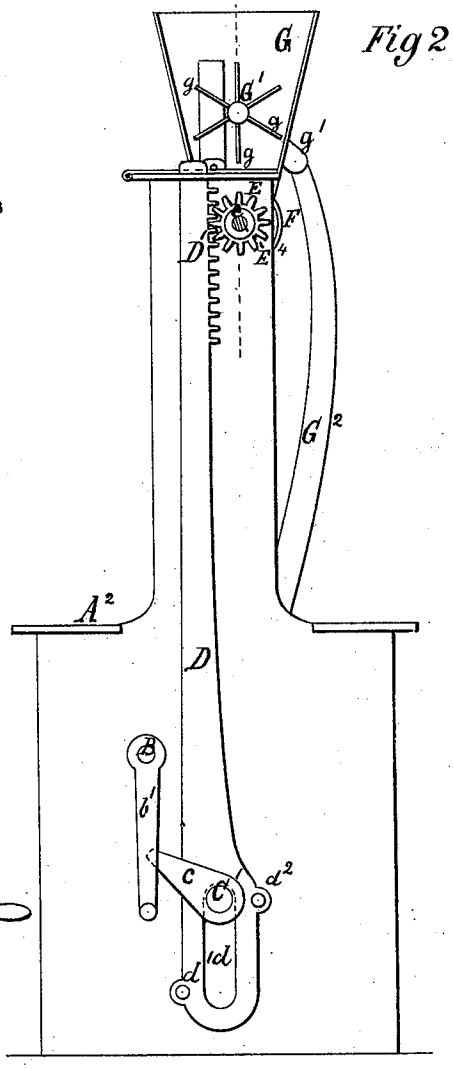

Fig 5.

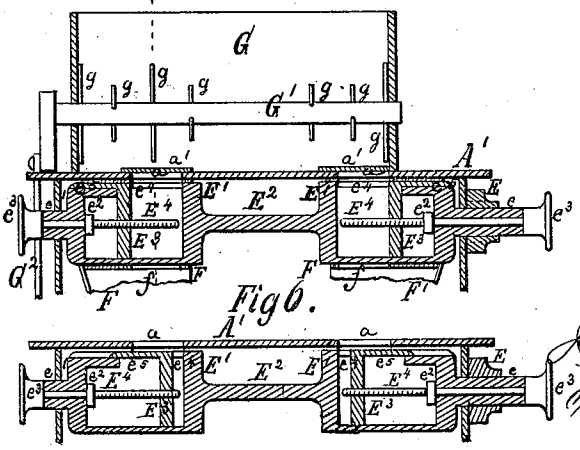

Fig 6.

Witnesses:
James Martin Jr.
J. P. Theodore Lang

Inventor:
James R. Lawrence
by
Mason, Fenwick & Lawrence

N. PETERS, PHOTO-LITHOGRAPHER, WASHINGTON, D. C.

2 Sheets—Sheet 2.

J. R. LAWRENCE.

TOBACCO PACKING-MACHINES.

No. 193,666. Patented July 31, 1877.

Fig 4.

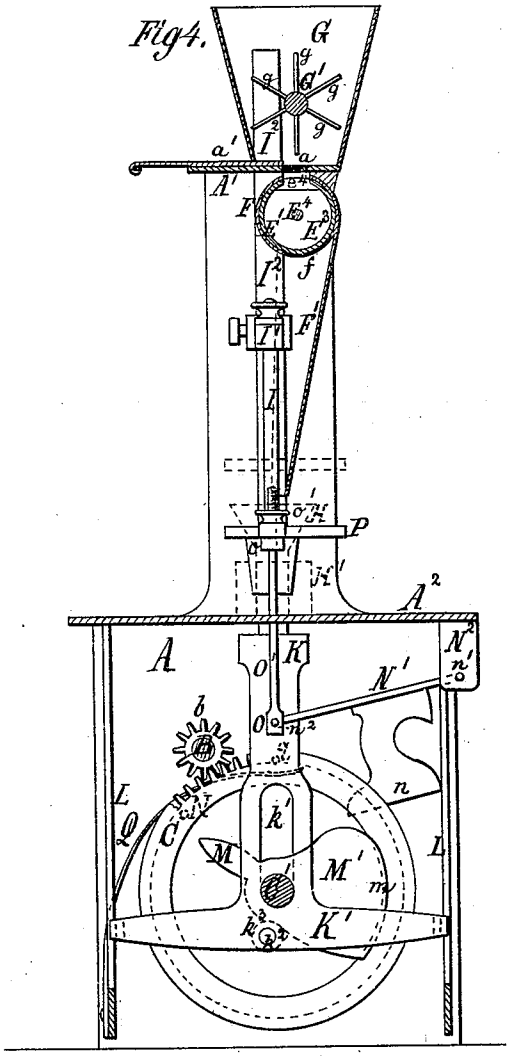

Fig 3.

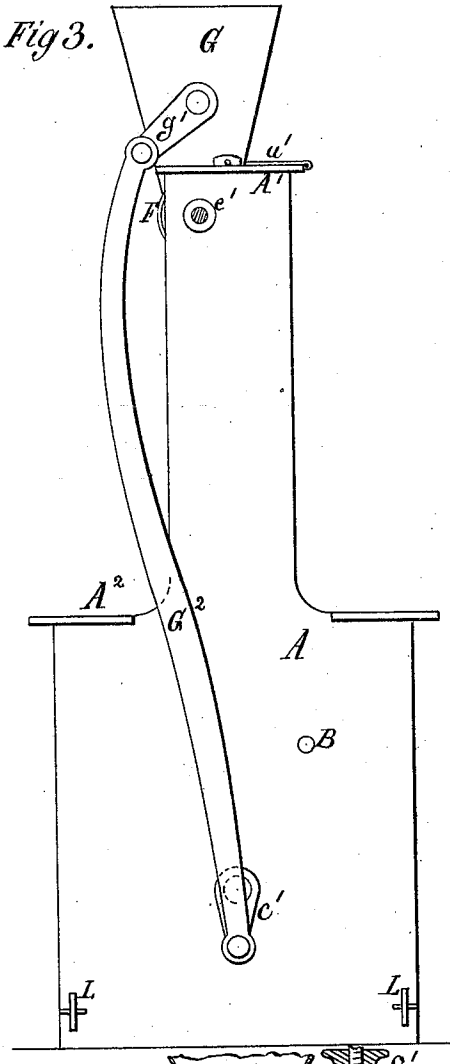

Fig 7.

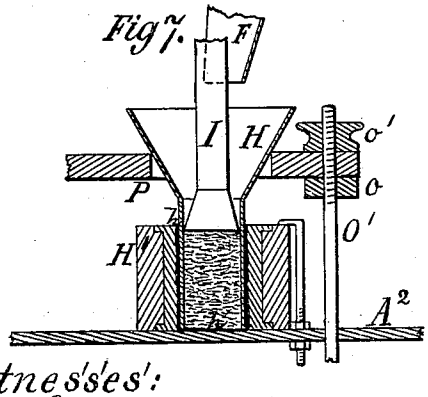

Fig 8.

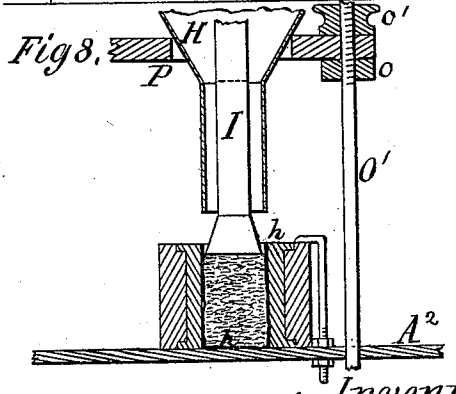

Witnesses:
James Martin Jr.
J. P. Theodore Laug

Inventor:
James R. Lawrence
by
Mason, Fenwick & Lawrence.

N. PETERS, PHOTO-LITHOGRAPHER, WASHINGTON, D. C.

UNITED STATES PATENT OFFICE.

JAMES R. LAWRENCE, OF DURHAM, ASSIGNOR OF ONE-HALF HIS RIGHT TO STERLING R. CARRINGTON, OF ORANGE COUNTY, NORTH CAROLINA.

IMPROVEMENT IN TOBACCO-PACKING MACHINES.

Specification forming part of Letters Patent No. **193,666**, dated July 31, 1877; application filed December 2, 1876.

To all whom it may concern:

Be it known that I, JAMES R. LAWRENCE, of Durham, in the county of Orange and State of North Carolina, have invented a new and useful Improvement in Machines for Packing Granulated Smoking-Tobacco or other materials, which improvement is fully set forth in the following specification, reference being had to the accompanying drawings, in which—

Figure 1 is a front view of my improved tobacco-packing machine. Fig. 2 is an elevation of the right, and Fig. 3 an elevation of the left, side of the same. Fig. 4 is a vertical cross-section in the line *x x* of Fig. 1. Fig. 5 is a detailed sectional view of the hopper and oscillating gage and feed-valves. Fig. 6 is a similar view of the gage and feed-valves, adjusted to deliver a smaller quantity of tobacco. Figs. 7 and 8 are detailed sectional views of the parts, whereby the filling and packing of the tobacco bags or packages is done, illustrating two successive stages of operation.

The nature of my invention consists in certain constructions, combinations, and arrangements of parts, hereinafter described and specifically claimed, whereby a machine for packing granulated smoking-tobacco or other materials into bags or packages is produced, which does its work more expeditiously and perfectly than other known appliances used for the same purpose.

In the drawings, A represents a frame, whereby two platforms, A^1 A^2, are supported. A shaft, B, is passed through the sides of the frame A, and provided, at or near the center, with a pinion, *b*, and outside the frame with a hand-crank, *b'*, or a drive-wheel. The pinion *b* drives a wheel, C, upon the main shaft C', which latter extends through the sides of the frame A, and is, at one end, provided with a cam-lever, *c*, and at the other end with a crank, *c'*. Between the cam-lever *c* and the side of the frame A a slide-rod, D, is interposed, riding on the shaft C' by means of a fitting upright slot, *d*. A pin, d^1, below the shaft C', and another pin, d^2, above the shaft C', are fastened to the said slide D, and operated by the cam-lever *c*. The upper part of the slide D is provided with a toothed rack, D', and is fitted into the overhanging part of the upper platform A^1. The rack D' gears into a pinion, E, of the extended journal *e* of the united gage-valves E^1, which are, at the other end, supported by another extended journal, e^1, and the frame A, through which the said journals pass. The valves E^1 are of the shape of hollow cylinders, with closed ends, and a solid connection, E^2, between them. The inner space of the said valves E^1 is divided by pistons E^3, which are operated by screws E^4. The said screws E^4 are passed through the journals *e* and e^1, respectively, and held in position by collars e^2, and thumb-heads e^3, outside the valves. The valves E^1 are each provided with a longitudinal slot, e^4, which is covered or closed at the off-side of the piston by a slide, e^5, with a surface conforming with that of the valves. The slide e^5 is united with the piston E^2, and, by the described arrangement, the inner space on one side of the piston is always open, while that on the other side is always closed. The vertical stroke of the slide-rod D is such that, at its upper termination, the valves E^1 are turned with their open slots e^4 upward, and vice versa. The valves E^1 are each inclosed in a cover, F, fastened to the platform A^1, and provided with an inclined guide, F', toward which an opening, *f*, in the said cover F leads, and effects communication with the valve. The covers F prevent the contents of the valve from dropping out before the opening *f* is reached.

Above the valve E^1 the platform A^1 of the hopper is provided with openings *a* and with slides *a'*, wherewith the said openings may be closed and the part of the platform A of the hopper which is occupied by the said slides serves as the bottom of the hopper G. Above the openings *a* a shaft, G^1, is passed through the sides of the hopper G, which has radial arms *g* inside and a crank-lever, *g'*, outside the hopper, by means of which latter and a connecting-rod, G^2, the revolving crank *c'* effects an oscillatory motion of the said shaft G^1.

The tobacco discharged into the guides F^1 slides down upon the same and drops into funnels H, the lower parts of which are inserted into the tobacco-bags *h* inside of strong receptacles H', which are held by clamps or otherwise to the platform A^2, and prevent the

bursting and disarrangement of the funnels and bags. The tobacco in the funnels H is then rammed down by means of rods I, which are fastened to a cross-head, I^1, upon a vertically-reciprocating rod, I^2. The upper part of the rod I^2 passes through the platform A^1 and its lower part through the platform A^2. Below the platform A^2 the rod I^2 is provided with a forked head, K, which has two flat prongs, K′, in the shape of an inverted T, coupled at their extremities by studs or stays *k*, and riding on the main shaft C′ by means of vertical slots k^1. The horizontal ends of the prongs K′ project a little beyond the stays *k*, and thus form two forked bearings, wherewith it travels on and between the vertical parts of two T-shaped lateral braces, L, of the frame A, thereby giving steadiness against tension to the shaft I^2 and the parts connected therewith. One of the prongs K′ is provided with a pin, k^2, and friction-roller k^3, which latter bears upon the surfaces of two cams, M M′, fastened to the main shaft C′. The cam M is pointed and slender, and effects a quick and short downstroke of the shaft I^2 and the rods I. The cam M′ effects a lower stroke, and by means of a circular extension, *m*, keeps the rods I down for a part of the revolution of the shaft C′. The wheel C is provided with a pin, N, whereby it operates a cam, *n*, on a lever-plate, N^1. The said lever-plate N^1 is, by means of two fulcrum-pins, n^1, secured to two lugs, N^2, on the lower side of the platform A^2. The swinging portion of the lever-plate N^1 is provided with two pins, n^2, which are fitted into the heads O of two vertical rods, O′, which pass through the platform A^2 and support an open frame, P, by means of nuts *o* and thumb-buttons *o′* upon their threaded ends. The said frame P incloses the funnels H on three sides and serves to lift them from the tobacco-bags after they are filled. A spring, Q, fastened to the front brace L, bears on a pin, *q*, on one of the prongs K′, and thereby keeps the rods I up.

Operation: The openings *a* in the hopper G are closed by the valves *a′*, and the hopper is filled with tobacco. Two bags, *h*, are drawn over the ends of two funnels, H, and the same inserted into the receptacles H′, which are then placed upon and attached to the platform A^2, the funnels being in a central position below the rods I. The pistons E^3 are now adjusted by means of the thumb-screws e^3, according to the quantity of tobacco which the bags shall contain. The slides *a′* are now removed, and the machine is set in motion. The oscillations of the shaft G^1 with the radial arms *g* cause the tobacco to pass through the openings *a* and e^4 into the interior of the valves E^1. The cam *c* now moves the slide D down, which causes a half-revolution of the valves E, and turns their slots *f* down. The tobacco is thereby discharged from the said valves upon the guides F′, and passes into the funnels H. The rods I, which have hitherto remained at their highest elevation, are now brought down with a quick motion by means of the cam M, as described, whereby the tobacco at the bottom of the bag is firmly wedged down. The rods I, as soon as they are relieved from the cam M, are rapidly moved up by the spring Q, or by a cord and weight balance, thereby preventing the tobacco from adhering to its surface and being carried up. After the whole amount of tobacco is discharged from the valves E^1 and has entered the funnels H, the rods I are brought down once more upon it by means of the cam M′, and held down by means of the circular periphery *m* of the same. This second descent of the rods I insures the packing of any loose particles of tobacco which are at the top of the bag and in the funnel, thus effecting a perfect packing of all of the tobacco in the bag *h*. During the latter operation the pin *q* comes in contact with the cam *n*, and thereby lifts the frame P, which takes the funnels H from the position shown in Fig. 7 to that shown in Fig. 8, and thereby entirely withdraws them from the bags *h* and the receptacles H′. The frame P now descends to its former level, and the rods I are moved up by being relieved from the cam M in the above-described manner, and the receptacles H′ with the filled bags are removed.

The valves E^1 may be provided with scales and the slides e^4 with pointers, or vice versa, indicating the measurement or quantity attained by the adjustment of the piston E^3.

The influence of the weather upon the exceedingly hygroscopic tobacco necessitates continually-repeated adjustments of the valves E^1, and constant reweighing or remeasuring of the quantities discharged by the said valves, which difficulties would be greatly reduced by the use of a scale, as described, in connection with a hygrometer.

It will be practicable to construct a machine with only one packing-rod, or with more than two such rods, and this will be done if circumstances require, and when done the principle of the machine will not be changed or departed from.

Having thus described my invention, what I claim as new, and desire to secure by Letters Patent, is—

1. In a machine for packing granulated tobacco or other material, a feeding mechanism, in combination with a packing mechanism, with means for giving to the packing-rod or rods more than one reciprocation for each supply from the feeder, substantially as set forth.

2. In a tobacco-packing machine, the combination of the main shaft C, oscillating stirring-shaft G^1, oscillating tubular valve E^1, and intermediate mechanism for producing these movements, substantially as described.

3. The valve E^1, having a slot, e^4, in combination with the piston E^3, having a slide, e^5, and the screw E^4, having a collar, e^2, and a thumb-head, e^3, substantially as set forth.

4. The valve E^1, having a pinion, E, in combination with the slide D, having a rack, D′,

pins d^1 d^2, and a slot, *d*, the main shaft C′, cam *c*, shaft B, lever G^2, and shaft G^1, substantially as set forth.

5. The combination of the rod I^2, carrying a packing-rod I, the forked head K, having prongs K′, slots k^1, pins k^2, the long and short cams M M^1, main shaft C′, spring Q, or its equivalent, and guides L L of the frame, substantially as and for the purpose described.

6. The combination of the frame P, rods O′, lever-plate N^1, cam *n*, main shaft C′, and wheel C, carrying an eccentric pin, N, the whole constructed and arranged to operate substantially as described.

Witness my hand in the matter of my application for a patent for a machine for packing granulated tobacco or other articles this 29th day of November, 1876.

JAMES R. LAWRENCE.

Witnesses:

D. A. JOHNSON,

W. M. MAYNOP.