Nov. 19, 1946. A. M. GUREWITSCH 2,411,424

ULTRA HIGH FREQUENCY SPACE RESONANT SYSTEM

Filed Jan. 28, 1943

Fig. 1.

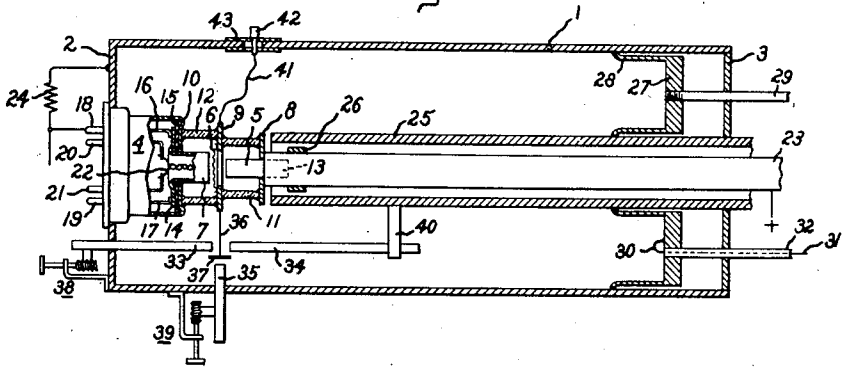

Fig. 2.

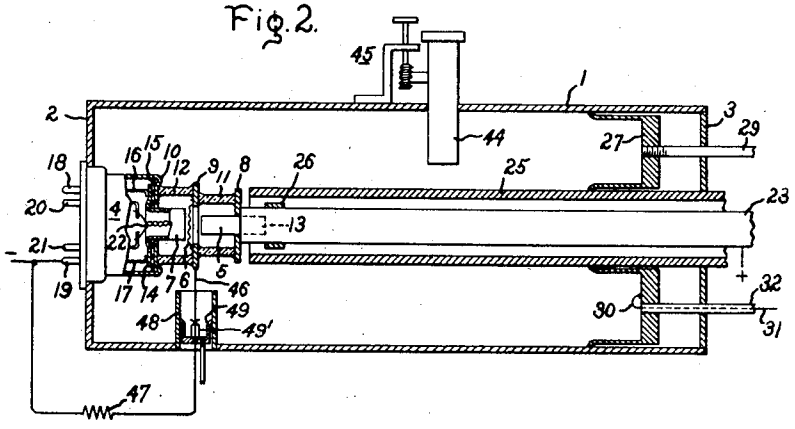

Fig. 3.

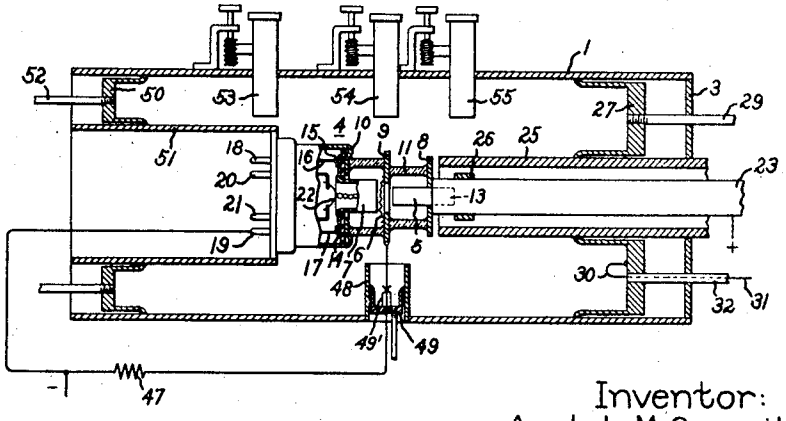

Inventor:
Anatole M. Gurewitsch,
by Harry E. Dunham
His Attorney.

Patented Nov. 19, 1946

2,411,424

UNITED STATES PATENT OFFICE

2,411,424

ULTRA HIGH FREQUENCY SPACE RESONANT SYSTEM

Anatole M. Gurewitsch, Schenectady, N. Y., assignor to General Electric Company, a corporation of New York

Application January 28, 1943, Serial No. 473,875

10 Claims. (Cl. 315—39)

1

My invention relates to ultra high frequency space resonant systems, such as space resonant oscillators, which employ as a control element thereof an electric discharge device.

It is an object of my invention to provide new and improved ultra high frequency space resonant systems.

It is another object of my invention to provide new and improved tuning means for ultra high frequency space resonant systems employing, as an element thereof, an electric discharge device.

It is another object of my invention to provide new and improved tuning means of the stub type for ultra high frequency oscillators.

It is a further object of my invention to provide new and improved control means in ultra high frequency space resonant systems which include, as an element thereof, an associated electric discharge device, and wherein the control means determines the field distribution within the space resonant region and consequently controls the voltage appearing across the electrodes of the discharge device.

Briefly stated, in the illustrated embodiments of my invention I provide new and improved space resonant systems wherein the space resonant cavity or region may be tuned not only to control the operating frequency of the system, but also to control the magnitude and phase of the voltages impressed across electrodes of an electric discharge device employed in such a system.

For example, in the application of my invention to oscillators the electric discharge device may be enclosed within a conductive member or cylinder which defines a space resonant region, and stubs, either of conductive nature or of dielectric material, are optimumly placed within the region to control not only the distribution of the electromagnetic wave, or waves, within the region but also to control the distribution of the electric potential of the wave, and consequently to control the voltage differences appearing across the electrodes of the discharge device.

For a better understanding of my invention, reference may be had to the following description taken in connection with the accompanying drawing, and its scope will be pointed out in the appended claims. Fig. 1 of the accompanying drawing illustrates an embodiment of my invention as applied to a space resonant oscillator wherein a plurality of stubs are associated with the grid terminal of the discharge device for controlling the potential difference between the grid and cathode. Fig. 2 illustrates a still further

2

embodiment of my invention wherein a radially extending stub is displaced from the discharge device and extends into the space resonant region for tuning the region and for controlling the wave distribution therein. Fig. 3 represents a still further embodiment of my invention wherein a plurality of adjustable radially extending stubs are positioned approximately opposite the electrodes of an associated electric discharge device for tuning the space discharge device and for controlling the potential appearing across the electrodes, particularly the grid and cathode of the discharge device.

Referring now to Fig. 1 of the drawing, I have there illustrated my invention as applied to an ultra high frequency space resonant system which may be used as an ultra high frequency space resonant oscillator and which comprises a conductive member or conductor, such as a metallic cylinder 1 having end restrictions or walls 2 and 3 which serve to support apparatus to be described presently. As a central control element of the space resonant system, I employ an electric discharge device 4. Although not limited thereto, the discharge device 4 may be of the type disclosed and broadly claimed in copending patent application Serial No. 436,633, filed March 28, 1942, of James E. Beggs and which is assigned to the assignee of the present application. The discharge device comprises a cylindrical anode 5, a grid 6 and a cylindrical cathode 7, the latter element having its emissive part in the form of a flat disk which faces the grid 6. The envelope within which these electrodes are enclosed comprises a series of three circular metal parts or disks 8, 9 and 10 which are supported in spaced relation by glass cylinders 11 and 12 sealed between them. The disk 9 serves as a terminal for the grid 6, and a terminal for the anode is provided by a cylindrical enlargement 13 which is welded or soldered upon the upper surface of disk 8.

The cathode 7 is provided at its lower extremity with a flange 14 which parallels the under surface of disk 10 but which is separated from that part by an insulating spacer 15 which may be a mica washer. With this arrangement, the disk 10 has a high frequency connection with the cathode through the capacity existing between this part and flange 14, but is effectively insulated therefrom so far as unidirectional potentials are concerned. Separate direct current connections are made to the cathode by means of lead-in conductors 16 and 17 which are secured to the under surface of flange 14 and are connected to

terminal posts 18 and 19 which are supported by the base of the discharge device. Additional terminal posts 20 and 21 are provided for the purpose of supplying heating current to a coiled or filamentary cathode heater 22 arranged within the cylindrical cathode 7.

Anode 5 of electric discharge device 4 is connected to a longitudinally extending rod 23 which is arranged to have one end extend beyond the defining conductor or cylinder 1 for the purpose of facilitating application of unidirectional potential across the anode and the cathode of the discharge device. The other terminal for the discharge potential may be connected to terminal post 18 and this post may also be connected to cylinder 1 through a resistance 24 which controls the difference in potential between the cathode 7 and cylinder 1.

As a means for defining with cylinder 1 a space resonant cavity or region, I provide a conductive tubular member or cylinder 25 in spaced relation with respect to connecting rod 23 and which may be supported by the end wall 3. Filtering means, such as an annular member 26, is located within the space between rod 23 and the inner surface of cylinder 25 for the purpose of offering opposition to the flow of electromagnetic waves, thereby serving to prevent the dissipation of the field energy through this space.

I employ tuning means for controlling the natural frequency of the space resonant region defined between the inner surface of cylinder 1 and the outer surface of cylinder 25 and for controlling thereby the operating frequency of the system as a whole. The tuning means may take the form of an annular plunger 27 having restricted finger parts 28 which closely engage the respective surfaces of cylinder 1 and plunger 25 but which permit axial or longitudinal adjustment of the plunger. Plunger 27 may be adjusted longitudinally by means of a rod 29 which, in turn, may be connected to a suitable gear mechanism for effecting the desired precise positioning of the plunger.

Energy may be extracted from the space resonant regions by any suitable output electrode means. For example, as one form of such output electrode means I have chosen to show a loop 30 constituting an extension of an inner conductor 31 of a concentric transmission line comprising the inner conductor 31 and an outer tubular conductor 32.

Within the space resonant region defined by cylinders 1 and 25, I provide a single stub, or a plurality of stubs, for tuning the space resonant region and for controlling the form or distribution of the standing electromagnetic wave therein. One way in which this type of construction may oe employed is for the purpose of controlling the potential distribution, that is the electric component of the standing electromagnetic wave, and thereby controlling the potential difference across the electrodes of discharge device 4. In Fig. 1 I have chosen to show three stubs, 33, 34 and 35, which may be employed for the above described purpose. These stubs may be constructed of either a conductive material or a dielectric material, depending upon the nature and distribution of the electromagnetic field within the space resonant region, and the number, size and positions of the stubs will of course depend upon the general configuration of the space resonant region and the shape and position of the electric discharge device which is employed in the region.

As one example of the way in which the stubs may be positioned, stubs 33 and 34 may be positioned longitudinally, one on each side of the conductor 36 which is connected to the grid disk 9 and which is provided with a disk foot 37. Stub 35 is positioned opposite the outer surface of foot 37. Stub 33 may be positioned longitudinally with respect to conductor 36 by a suitable mechanical means such as a worm gear and thumb adjusting means 38 supported by end wall 2. In like manner, the stub 35 may be adjusted in its radial position by means of a similar adjusting means 39 supported and attached to the outer surface of cylinder 1. Although stub 34 is shown in Fig. 1 as being relatively fixed in position and supported from cylinder 25 by means of a base 40, it is within the purview of my invention to provide also an adjustment of stub 34 in the event such adjustment is found necessary for the proper control of the wave within the region.

A biasing potential may be impressed on grid 6 of the discharge device 4 by means of a flexible conductor 41 which extends through an opening in cylinder 1 and which is provided with an externally accessible terminal 42. Terminal 42 may be supported by slidable plates 43 which permit adjustment of conductor 41 to an optimum point, that is, to a position where the conductor causes minimum disturbance of the desired wave distribution.

Relative to the operation of the space resonant system shown in Fig. 1, upon the application of a unidirectional potential across the anode and cathode of discharge device 4, the system will be set into oscillation and the operating frequency thereof is determined by the position of plunger 27 and the net effect of the stubs 33—35, inclusive. The coupling between the anode-grid and the grid-cathode circuits of discharge device 4 may be considered as accomplished not only by the interelectrode capacitances of the discharge device but also by virtue of the effect of tuning stubs 33—35. In addition to the above-stated functions, the tuning stubs 33—35 also serve to control the magnitude and the phase of the high frequency potential difference appearing across grid 6 and cathode 7. Control of the grid-cathode voltage is obtained by adjustment of stubs 33 and 35.

In Fig. 2 there is illustrated another embodiment of my invention which is similar in many respects to that shown in Fig. 1, and corresponding elements have been assigned like reference numerals. In the arrangement of Fig. 2, I provide a radial tuning stub 44 which may be adjusted in its position by means of a worm-gear and thumb-screw means 45 which serves to tune the space resonant region defined by cylinders 1 and 25. Of course, the natural frequency of the space resonant region may be controlled by the joint operation of plunger 27 and stub 44.

An electrical connection or conductor 46 is connected to the grid disk 9 and may be connected to the negative terminal of the direct current source and the cathode 7 through a resistance 47. Conductor 46 may be made externally accessible by employing a conductive tuning means comprising a tubular member 48 and an adjustable plunger 49.

Conductor 46 is preferably electrically connected to plunger 49 and maintained at the same potential as cylinder 1. One way in which this may be effected is by passing conductor 46 through a relatively small aperture in the end of plunger 49 and electrically connecting the con-

ductor 46 thereto by means of a plurality of annularly spaced fingers 49' which serve to prevent the transfer of appreciable energy through the aperture in the end of the plunger. Plunger 49 may be positioned as illustrated opposite the grid of electric discharge device 4 and more particularly the grid disk 9 in order to control the magnitude and phase of the potential of the grid. In this manner, the potential difference appearing between the grid and the cathode of discharge device 4 may be controlled, thereby providing an additional means for controlling the distribution and form of the standing electromagnetic wave within the space resonant region and for controlling the spatial distribution of the electric component of the electromagnetic wave.

A still further modification of my invention is shown in Fig. 3 which is also similar in some respects to the arrangements shown in Figs. 1 and 2, and corresponding elements have been assigned like reference numerals. In the arrangement of Fig. 3, I provide a tuning plunger 50 at one end of the space resonant region and which engages the inner surface of cylinder 1 and the outer surface of a conductive cylinder 51 which supports the base of the electric discharge device 4. The axial or longitudinal position of plunger 50 may be controlled by actuating rods 52.

As additional means for tuning the space resonant region and for controlling the potential difference between the electrodes of discharge device 4, I provide a plurality of radially adjustable stubs 53, 54 and 55. Stub 54 is preferably located immediately opposite the grid disk 9, and stubs 55 and 53 may be placed generally within the vicinity of the anode and cathode of discharge device 4 or at a distance beyond these points. By adjustment of the radial positions of the ends of stubs 53—55, it will be appreciated that I provide readily adjustable means for determining the distribution of the standing electromagnetic wave within the space resonant device and consequently for controlling the spatial distribution of the electric component of the electromagnetic wave. Furthermore, such an arrangment is readily susceptible of controlling the magnitude and phase of the voltage impressed across cathode 7 and grid 6.

In the operation of the arrangement shown in Fig. 3, the natural operating frequency of the space resonant system may be controlled by individual or joint adjustment of plungers 27 and 50 and tuning stubs 53—55.

While in the illustrated embodiments of my invention I have shown my invention as applied to a space resonant system of particular configuration and as employing a particular type electric discharge device and control elements of particular form, it will be obvious to those skilled in the art that changes and modifications may be made without departing from my invention, and I, therefore, aim in the appended claims to cover all such changes and modifications as fall within the true spirit and scope of my invention.

What I claim as new and desire to secure by Letters Patent of the United States is:

1. An ultra high frequency resonator comprising a conductive member providing a resonator, an electric discharge device within said resonator and including a plurality of electrodes comprising an anode, a cathode and a grid and being provided with externally accessible high frequency terminals, a conductor extending from the terminal connected to said grid, and a plurality of stubs extending into said resonator within the vicinity of said conductor for controlling the potential distribution of the electromagnetic waves within said resonator and for controlling the grid-cathode voltage of said discharge device.

2. An ultra high frequency resonator comprising a conductive member providing a resonator, an electric discharge device within said resonator and including a plurality of electrodes comprising an anode, a cathode and a grid and being provided with externally accessible high frequency terminals, a conductor extending from the terminal connected to said grid, a longitudinal stub and a radial stub projecting into said resonator within the vicinity of said conductive member, and adjustable means attached to said resonator for controlling the positions of said stubs with respect to said conductor for controlling the grid-cathode voltage of said discharge device.

3. An ultra high frequency resonator comprising a conductive member providing a resonator, an electric discharge device within said resonator and including a plurality of electrodes comprising an anode, a cathode and a grid and being provided with externally accessible high frequency terminals, a conductor extending from the terminal connected to said grid, a pair of longitudinally positioned stubs on opposite sides of said conductor, adjustable means attached to said resonator for controlling the relative position of said stubs, a radial stub opposite said conductor, and adjustable means attached to said resonator for controlling the radial position of said last mentioned stub.

4. An ultra high frequency resonator comprising a conductive member providing a resonator, an electric discharge device within said resonator and including a plurality of electrodes comprising an anode, a cathode and a grid and being provided with externally accessible high frequency terminals, a conductive connection extending from the terminal connected to said grid, a tuneable plunger opposite said terminal through which said conductive connection extends, and means attached to said resonator for controlling the distribution of the electromagnetic waves within said resonator comprising a radially adjustable stub spaced in said resonator from said electric discharge device.

5. An ultra high frequency resonator comprising a conductive member providing a resonator, an electric discharge device within said resonator and including a plurality of electrodes comprising an anode, a cathode and a grid and being provided with externally accessible high frequency terminals, a conductive connection extending from the terminal connected to said grid, a tuneable plunger opposite said terminal through which said conductive connection extends, and means attached to said resonator for controlling the grid-cathode voltage of said discharge device by controlling the distribution of the electromagnetic waves within said resonator comprising an adjustable radial stub opposite the grid terminal and a pair of adjustable radial stubs on either side of the first mentioned stub.

6. An ultra high frequency resonator comprising a conductive cylinder providing a resonator, an electric discharge device within said resonator of generally cylindrical configuration and including a plurality of electrodes comprising an anode, a cathode and a grid and being provided with externally accessible disks constituting high frequency terminals, an externally accessible anode connecting rod, a tubular conductor sur-

rounding and in spaced relation with said rod, a longitudinally adjustable annular tuning plunger between said cylinder and said tubular conductor at one end of said resonator, a second annular plunger at the other end of said resonator, means for controlling the grid-cathode voltage by controlling the distribution of the electromagnetic waves within said resonator comprising a radially adjustable stub opposite the grid disk, and a pair of radially adjustable stubs one on each side of the first mentioned stub.

7. An ultra high frequency resonator comprising a hollow conductive cylinder providing a resonator, an electric discharge device within said resonator of generally cylindrical configuration and including a plurality of electrodes comprising an anode, a cathode and a grid and being provided with externally accessible disks constituting as high frequency terminals, an externally accessible anode connecting rod, a tubular conductor surrounding and in spaced relation with said rod, a longitudinally adjustable annular tuning plunger between said cylinder and said tubular conductor at one end of said resonator, a second annular plunger at the other end of said resonator, means for controlling the grid-cathode voltage by controlling the distribution of the electromagnetic waves within said resonator comprising a radially adjustable stub opposite the grid disk, a pair of radially adjustable stubs one on each side of the first mentioned stub, an externally accessible conductive connection to said grid disk, and a tuneable plunger radially opposite said grid disk through which said conductive connection extends.

8. An ultra high frequency resonator comprising a hollow cylindrical conductor providing a resonator, an electric discharge device within said resonator including a plurality of electrodes comprising an anode, a cathode and a grid axially aligned within said conductor and having externally accessible high frequenecy terminals, means for impressing a biasing potential

on said grid comprising an electrical connection to said grid and extending through said conductor, and means for controlling the high frequency potential of said grid comprising a metallic tuning plunger within the vicinity of the grid terminal and through which said electrical connection extends.

9. An ultra high frequency resonator comprising a hollow conductor providing a resonator, an electric discharge device within said resonator including a plurality of electrodes comprising an anode, a cathode and a grid and having externally accessible high frequency terminals, means for impressing a biasing potential on said grid comprising an electrical connection to said grid and extending through said conductor, and means for controlling the potential of said grid comprising a tuning means including a tubular metallic conductor connected to said first mentioned conductor and having therein a radially adjustable plunger through which said electrical connection extends.

10. An ultra high frequency resonator comprising a hollow metallic cylinder providing a resonator, an electric discharge device of generally cylindrical configuration within said resonator and including a plurality of electrodes comprising an anode, a cathode and a grid, an anode connecting rod within and extending axially of said cylinder, a tubular conductor about said connecting rod and displaced radially therefrom, filtering means supported by said connecting rod for offering a high impedance to the flow of electromagnetic energy within the space between said anode rod and said tubular conductor, adjustable means between said cylinder and said tubular conductor for controlling the effective electrical length of said resonator, and means for controlling the voltage impressed across said grid and said cathode comprising an adjustable radial stub extending within said cylinder.

ANATOLE M. GUREWITSCH.