April 25, 1967 A. W. DONELSON 3,315,678

EPILATING MACHINE AND CONTROL CIRCUIT

Filed July 17, 1964 3 Sheets-Sheet 1

FIG. 1

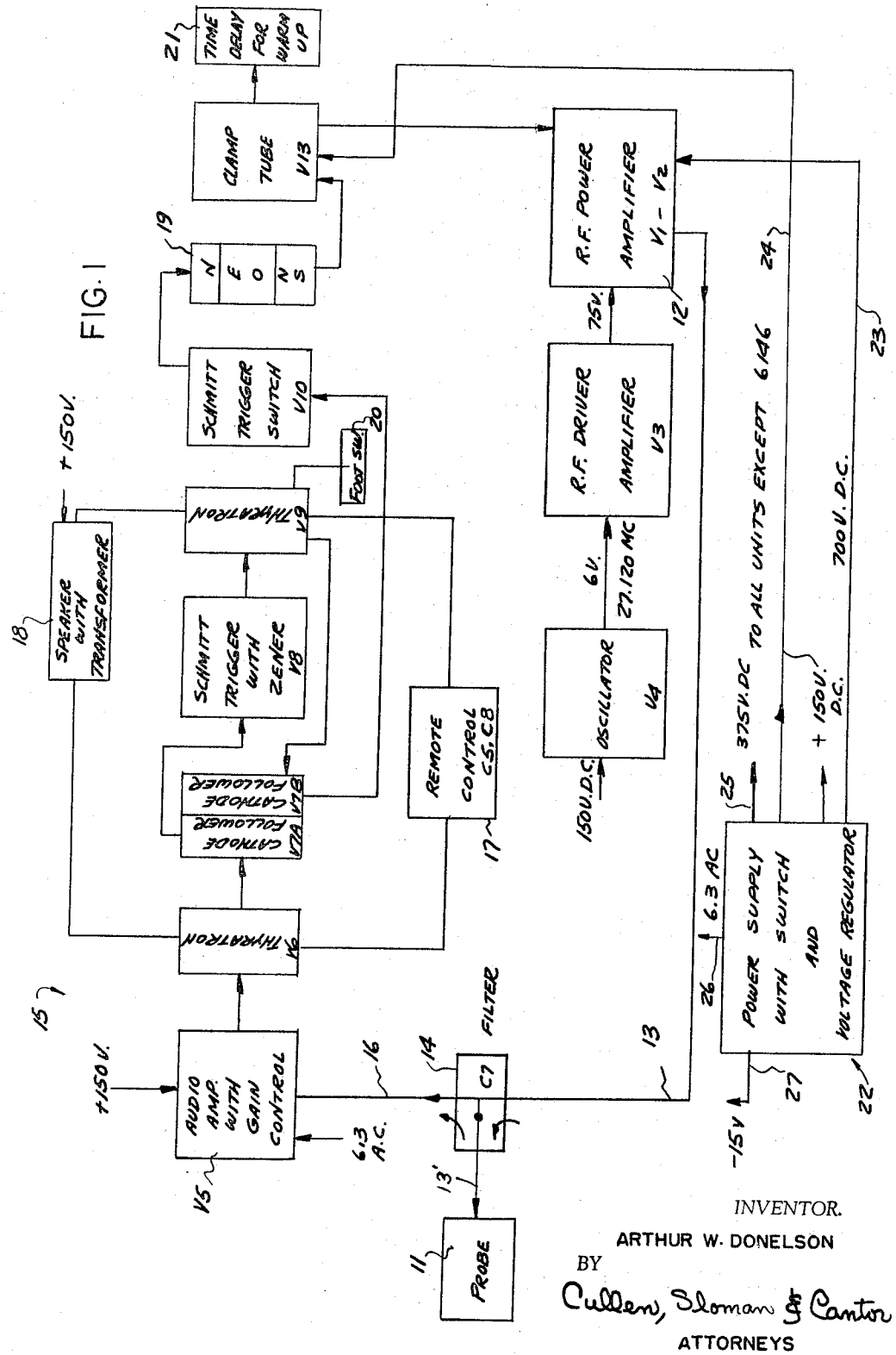

INVENTOR.
ARTHUR W. DONELSON
BY
Cullen, Sloman & Cantor
ATTORNEYS

April 25, 1967 A. W. DONELSON 3,315,678

EPILATING MACHINE AND CONTROL CIRCUIT

Filed July 17, 1964 3 Sheets-Sheet 2

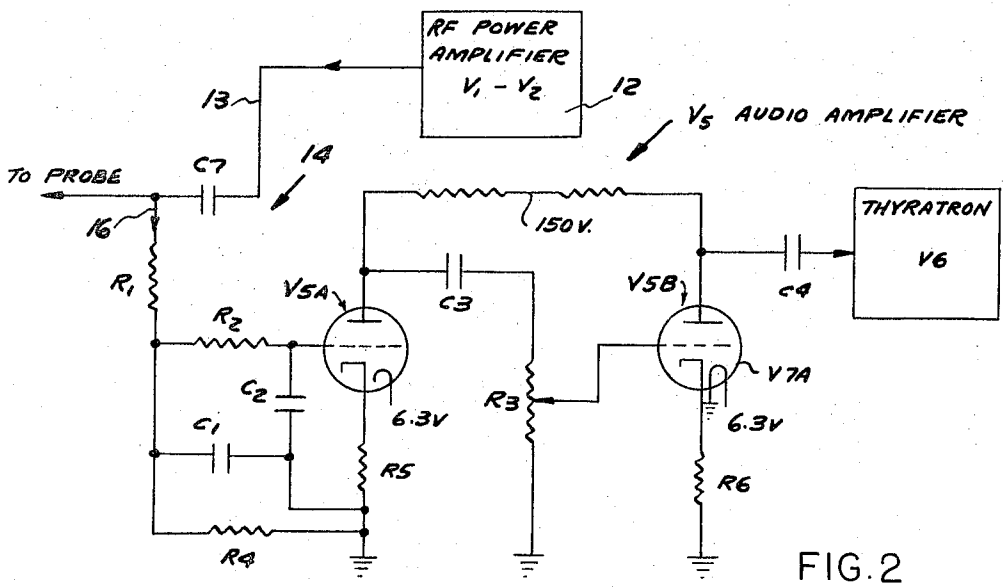

FIG. 2

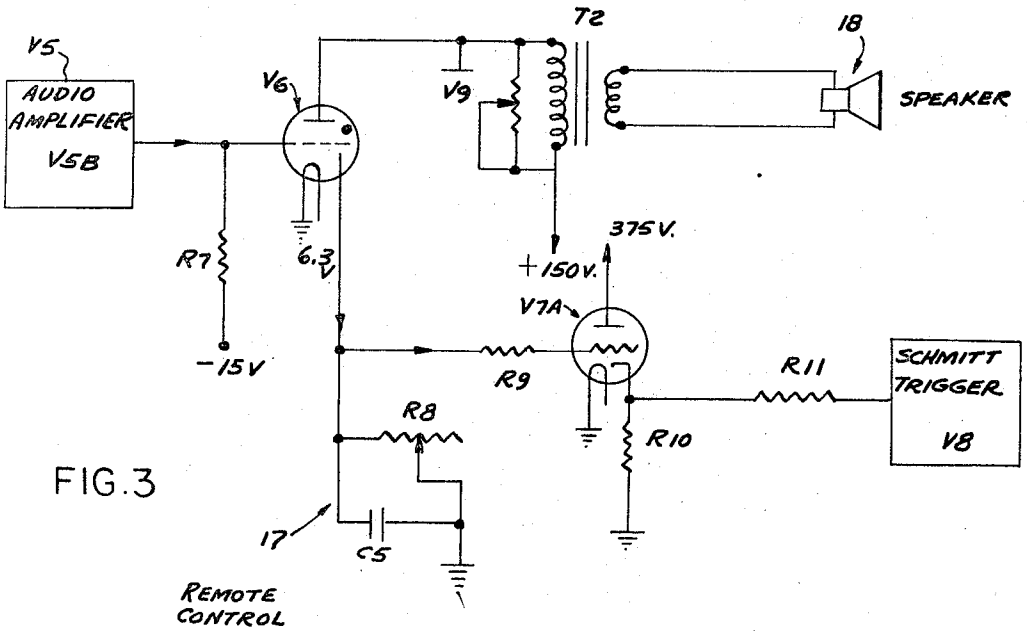

FIG. 3

INVENTOR.
ARTHUR W. DONELSON
BY
Cullen, Sloman & Canton
ATTORNEYS

April 25, 1967 A. W. DONELSON 3,315,678

EPILATING MACHINE AND CONTROL CIRCUIT

Filed July 17, 1964 3 Sheets-Sheet 3

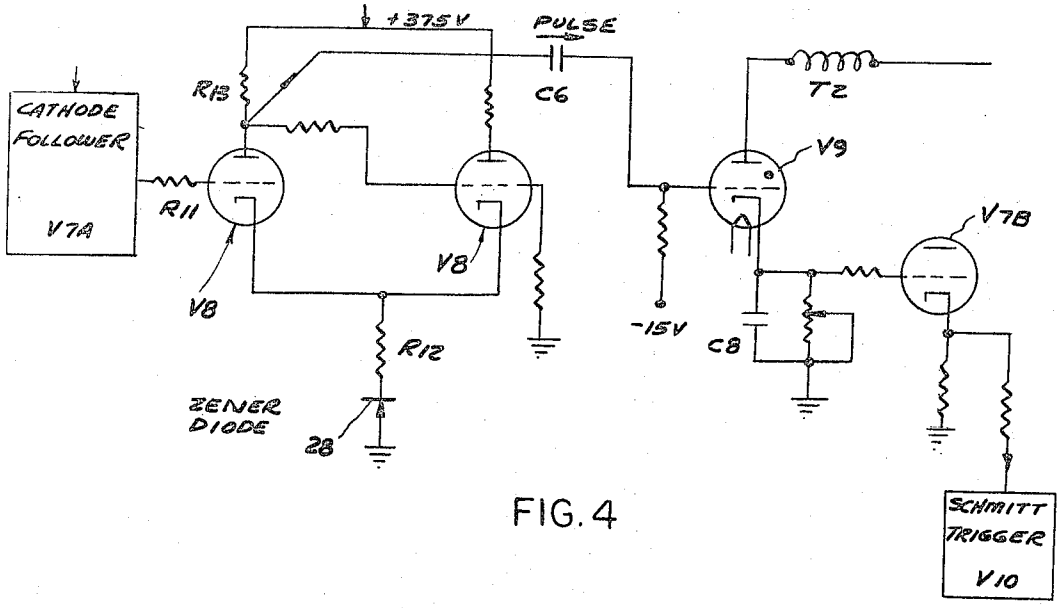

FIG. 4

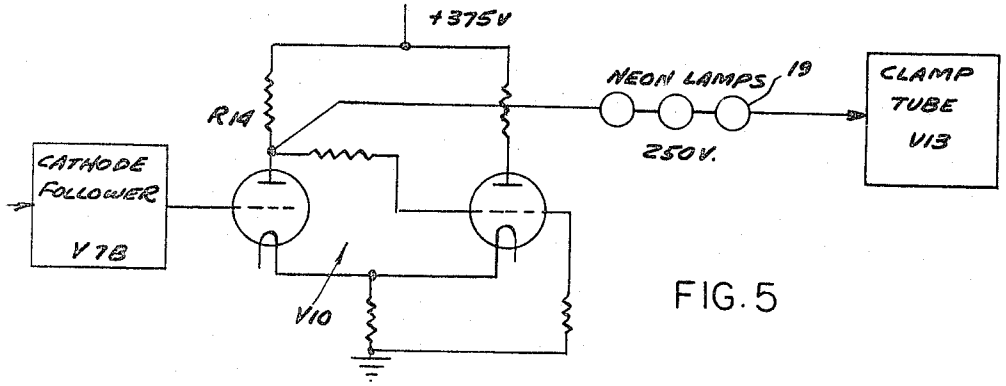

FIG. 5

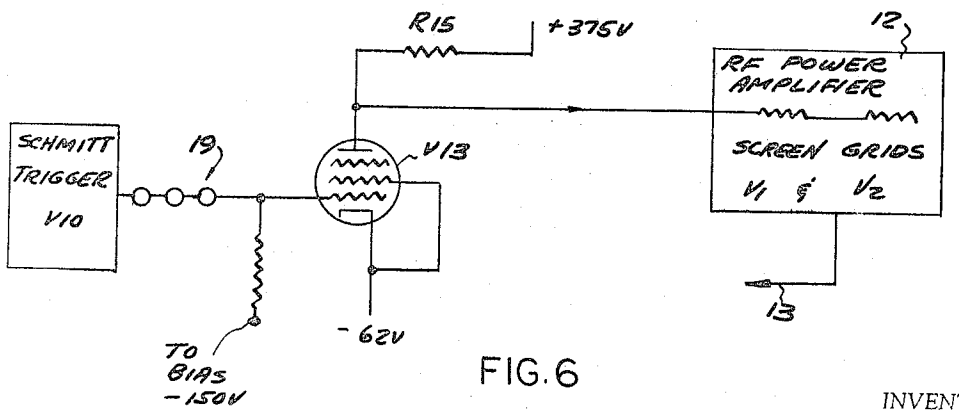

FIG. 6

INVENTOR.
ARTHUR W. DONELSON.
BY
Cullen, Sloman & Canton
ATTORNEYS

United States Patent Office 3,315,678
Patented Apr. 25, 1967

3,315,678

EPILATING MACHINE AND CONTROL CIRCUIT

Arthur W. Donelson, Flint, Mich., assignor to Epilatron, Inc., Detroit, Mich.

Filed July 17, 1964, Ser. No. 383,318
11 Claims. (Cl. 128—303.18)

This invention relates to an epilating machine and more particularly to an automatic intermittently operable quick acting control circuit including a power supply wherein the said circuit is actuated by an amplified very small voltage differential from the human body achieved on application of the probe to the pore of a human body.

It is an object of the present invention to provide a control circuit for an epilating machine which utilizes the electrical potential differential between the human body and said machine, and uses this small potential difference as the control mechanism for activating the epilating machine.

It is a further object to take this small voltage impulse, amplify the same in the present control circuit to operate triggering mechanisms which in turn control the momentary and temporary release of radio frequency energy to the probe for a momentary burning operation in the destruction of a hair follicle.

It is another object to provide an epilating device which is painless to the user and which employs high intensity radio frequency energy.

These and other objects and advantages will be seen from the following specifications and claims in conjunction with the appended drawings in which:

FIG. 1 is a schematic block diagram of the present epilating machine indicating the power supply, the radio frequency power supply and the control circuit connected with the power supply for delivering intermittent radio frequency energy to the probe.

FIG. 2 is a fragmentary and schematic wiring diagram showing the connections of the probe to the RF source and to the audio amplifier in the control circuit and with details as to filter and audio amplifier of FIG. 1.

FIG. 3 is a similar diagram showing the connection of the amplifier of FIG. 2 to the V6 thyraton with remote control, connected speaker and cathode follower of FIG. 1.

FIG. 4 is a similar diagram showing the connections from the cathode follower of FIG. 3 to the Schmitt trigger V8 of FIG. 1, connected thyraton V9 and cathode follower V7B.

FIG. 5 is a similar diagram corresponding to FIG. 1 showing the connection between the cathode follower V7B of FIG. 4 and the Schmitt trigger V10 and connected neon lamps.

FIG. 6 is a schematic wiring diagram showing the wiring betwen the neon lamps of FIG. 5 and clamp tube V13 and screen grids of V1 and V2 for the power amplifier controlled thereby.

It will be understood that the above drawings illustrate merely a preferred embodiment of the invention and a simplified schematic version of the wiring to the extent required for an explanation of the function and operation of the present control circuit for the epilating machine.

R.F. POWER SOURCE

Referring to the drawings, in FIG. 1, the needle probe of the epilating machine is schematically shown by box 11 and which receives through filter 14 and coaxial cable 13 intermittent short duration radio frequency energy from the conventional RF power amplifier 12 which includes a pair of control tubes V1–V2. Said power amplifier includes a standard pi network, to deliver radio frequency energy through filter 14 to probe 11 and has a preselected setting, for illustration, of 27.120 mc. approved

under type #ME–569 from the Federal Communications Commission.

Box V4 is suitably connected to the power supply 22 which includes a switch and a voltage regulator and receives 150 volts D.C., for illustration, from said power supply. V4 is a crystal controlled triode oscillator which is adjustable; and in the illustrative embodiment has been set at 27.120 megacycles which is delivered at approximately six volts, for illustration, to the RF driver amplifier V3, in turn delivering 75 volts to RF power amplifier 12, which includes control tubes V1 and V2.

Thus, the present epilating machine includes needle probe 11, an RF source with an RF power amplifier 12 with control tubes V1 and V2 and coaxial cable 13' which interconnects the amplifier, the tubes and the probe.

AUTOMATIC CONTROL CIRCUIT

The present invention is directed to an automatic intermittently operable quick acting control circuit which includes power supply 22 with voltage regulator, which power supply is adapted to deliver through its various leads the required current and voltages or biases to the said circuit as hereafter described. For example, it delivers 700 volts D.C. through lead 23, 150 volts through lead 24, 375 volts D.C. through lead 25, 6.3 volts A.C. through lead 26, minus 15 volts through lead 27, all as schematically shown in FIG. 1.

Many of the elements in the control circuit are conventional elements which may be purchased on the market and it is therefore the combination of these elements which makes up the present control circuit for the epilating machine.

V5 is an audio amplifier with gain control, FIG. 1, and shown in detail in FIG. 2. It is connected in series to the normally non-conductive thyraton tube V6 which has a remote control designated by box 17 and the letter C5, C8. V6 activates speaker 18 through a suitable transformer, FIG. 3. Remote control 17 is also connected to a second thyratron tube V9, in turn also connected to said transformer.

Thyratron V6 is connected to cathode follower V7A in turn connected with Schmitt trigger V8 which incorporates Zener diode 28, FIG. 4.

FIG. 3 illustrates in detail the connections between thyratron V6, cathode follower V7A, remote control 17, transformer T2 and speaker 18.

Schmitt trigger V8 connects a second thyratron V9 which through cathode follower V7B is connected to a second Schmitt trigger V10, FIG. 1. Thyratron V9 has a switch 20 for manual control of the control circuit.

Schmitt trigger V10 is connected through a series of neon tubes 19 to clamp tube V13, which is normally conductive (and tubes V1–V2 inoperative) and which has a warm-up time delay unit 21. Tube V13 is connected to control grids V1–V2 of the RF power amplifier 12, FIG. 6.

OPERATION

Audio amplifier

Referring to FIGS. 1 and 2, a very small voltage or potential differential is applied by the human body to probe 11 and through lead 16 is directed to the resistance coupled audio amplifier V5 which includes tubes V5A and V5B.

This voltage is passed by resistance R1 and R2 to the grid of V5A. R1 and R2 together with condensers C1 and C2 function as a resistance capacitance filter designated at 14, FIG. 1, and serves to prevent RF voltage from the output RF amplifier 12 from damaging V5A.

An amplified version of this small voltage which V5A grid receives, FIG. 2, appears at the plate of V5A and the alternating current component is passed through con-

denser C3 to potentiometer R3 where any portion of this voltage may be selected and impressed upon the grid of V5B tube. This further amplifies the initial small voltage, which appears as amplified on the plate of V5B and is passed through condenser C4 to the grid of normally non-conductive thyratron tube V6, FIG. 3.

R4 serves to maintain the grid voltage of V5A constant. R5 and R6 serve to bias the grids of V5A and V5B respectively by maintaining their cathodes positive in relation to their grids. V5A and V5B tubes may thus be referred to as a resistance coupled audio amplifier with gain control.

Thyratron tube

When the voltage impressed on the grid of thyratron V6, FIG. 3, exceeds a certain value, as for example 3 volts, V6 thyratron becomes conductive. That is to say: electrons flow from the cathode to the plate charging C5 condenser. R7 of FIG. 3, serves to hold the normal grid voltage of V6 thyratron at minus 15 volts, which is required to hold this tube in a normally non-conductive condition.

Any current which passes through V6 thyratron and the second thyratron V9, FIGS. 1 and 4, passes through the T2 primary, FIG. 3, including a current in the secondary of T2 and producing a characteristic "click" at the connected speaker 18.

Thyratron remote control

V6 thyratron ceases to conduct when the voltage differential between its plate and cathode reach a certain minimum value. This leaves condenser C5 with a charge which now biases V6 to high value, preventing it from again becoming conductive until the C5 charge is reduced by the current now caused to flow through R8 potentiometer.

This requires an interval of time, adjustable by the variable arm of R8. Potentiometer R8 and associated condenser C5 thus form the remote control 17, FIG. 1. Said time interval over which the charge is gradually reduced in condenser C5 is regulated by potentiometer R8, FIG. 3.

Cathode follower

V7A, FIGS. 1 and 3, is a conventional cathode follower tube and is so connected that its cathode voltage duplicates the rise and fall of the charge in condenser C5, without itself drawing any current from C5 so as not to disturb the "time interval of the C5 discharge." Such time interval is controlled only by the R8 potentiometer.

Schmitt trigger

The cathode of V7A follower conducts this timed voltage through R11, FIG. 3, to the input grid of tube V8, FIG. 4, which is connected as a Schmitt trigger.

The circuit in FIG. 4 with reference to Schmitt trigger V8 is so adjusted that the right triode is normally conducting and the left triode is cut-off by the voltage drop in R12 connected with Zener diode 28.

When the input grid of V8 is carried positive the left triode suddenly becomes conductive and the right triode non-conductive. As the voltage at the input grid of the left triode becomes less as the charge in condenser C5 dissipates, as in FIG. 3, this condition again suddenly reverses, being a characteristic of the Schmitt trigger. When this occurs, the voltage drop across R13 becomes zero, the voltage at the plate of the left triode "snaps positive" to the voltage of the power supply, causing a positive "pulse" to pass through C6 condenser, FIG. 4.

Zener diode 28, FIG. 4, is in series with R12 to cause the circuit to produce this "pulse" before C5, FIG. 3, has lost all of its charge, and therefore shortly before V6 thyratron is capable of again becoming conductive.

Second thyratron tube and cathode follower

The pulse of voltage from C6 condenser, FIG. 4, is connected to the grid of V9 thyratron, which is identical

in performance to thyratron V6 except that condenser C8 in its cathode circuit has less capacity.

Thyratron V9 also has a cathode follower V7B for isolation which is directly coupled to the input grid of a second Schmitt trigger V10, FIG. 5.

Second Schmitt trigger

Here the Schmitt trigger functions as a switch. The left triode is normally at "cut-off," and the right triode is normally conducting. The plate current of the left triode rises sharply when the input grid becomes positive and remains so until the C8 condenser of thyratron V9 is nearly discharged, whereupon it returns to normal. The rise of plate current of V10 Schmitt trigger of the left tube causes a drop in voltage in R14, FIG. 5, which, through the neon lamps 19 allow the bias to increase on the grid of clamp tube V13 which then cuts off, FIG. 6.

The neon tubes have a nearly constant voltage across them of approximately 250 volts when current passes through them.

Clamp tube

The clamp tube V13, FIG. 6, normally conducts sufficient current to reduce the voltage on its plate and hence, the screen grids of V1–V2 of RF power amplifier 12 to a low value, thereby causing V1 and V2 to be inoperative when clamp tube V13 is conductive. However, when V13 cuts off its plate current the screen grids of V1–V2 now rise to the normal operating voltage for such period of time as determined by condenser C8 of thyratron V9.

RF power amplifier

V1 and V2, FIGS. 1 and 6, comprise a conventional power amplifier 12 with a standard pi network, to deliver a certain radio frequency energy, as for example, 27.120 mc. through connections 13 and filter 14 to probe 11. The filter is large enough to pass the RF energy to the probe but small enough in capacity so as not to by-pass the voltage required by V5 audio amplifier.

The RF energy is passed through filter 14, FIG. 2, and is conveyed to the needle probe via coaxial cable 13' which is tuned to exactly one-half wave at a preselected operating frequency 27.120 mc. for illustration. This results in delivering the useful energy to the epilator needle or probe 11 at the lowest possible impedance for minimum discomfort to the patient.

The V1–V2 tubes, FIG. 6, comprise a conventional RF power amplifier 12 with a pi network for delivering RF energy through filter C7.

The primary purpose of the present circuit is to provide a painless device. This is achieved by using an application of such high intensity-radio frequency energy as to be able to epilate during extremely short period of carefully controlled time. This probably does not give the nerves time to respond to such short stimulus.

Having described my invention reference should now be had to the following claims.

I claim:

1. In an epilating machine, a needle probe, an RF source with an RF power amplifier including control tubes having screen grids, and a coaxial cable interconnecting the amplifier tubes and probe; the invention comprising;

an automatic intermittently operable quick acting control circuit including a power supply and voltage regulator;

an audio amplifier with gain control in said circuit connected to said probe amplifying the small voltage received by the probe when it contacts the human body;

a normally non-conductive thyratron tube connected to the audio amplifier intermittently rendered conductive by said amplified voltage for delivering a timed voltage;

a normally non-conductive Schmitt trigger connected to the thyratron for delivering an intermittent voltage

pulse upon termination of the timed voltage from said thyratron;

and a normally conductive clamp tube interconnected between said Schmitt trigger and the screen grids of said RF power amplifier and including a control grid connected to said Schmitt trigger, current flow in the tubes of the power amplifier being normally cut-off;

said voltage pulse from the Schmitt trigger to the clamp tube grid cutting off flow through said clamp tube to intermittently activate the control tubes of said RF power amplifier, to deliver through said coaxial cable a momentary surge of RF power to said probe.

2. In the epilating machine of claim 1, an adjustable timing means for holding the thyratron non-conductive after a fall of voltage from said audio amplifier, consisting of:

a condenser in parallel circuit with the output of said thyratron which builds up a charge during flow of current from said thyratron to the Schmitt trigger, and wherein after termination of said flow biases the thyratron to a high value temporarily preventing it from becoming conductive;

and a grounded remote manually controlled variable resistance connected across said condenser conducting current therefrom reducing its charge over a controllable interval, said interval being determined by adjustment of said resistance.

3. In the epilating machine of claim 1, said thyratron including a plate energized when the thyratron is momentarily conductive; and

an audio speaker with transformer connected with said plate producing an audible "click" at the moment the thyratron is rendered conductive.

4. In the epilating machine of claim 1, and a resistance capacitance filter in said circuit at the junction of said coaxial cable, probe and audio amplifier for transmitting RF energy to the probe but of a small enough capacity to preclude by-passing damaging RF voltage to said audio amplifier.

5. In the epilating machine of claim 1, said coaxial cable being tuned to exactly one-half wave at a predetermined operating RF frequency for the momentary delivery of useful RF energy to said probe at the lowest possible impedance for minimum discomfort to the patient.

6. In the epilating machine of claim 1, an adjustable timing means for holding the thyratron non-conductive after a fall of voltage from said audio amplifier, consisting of:

a condenser in parallel circuit with the output of said thyratron which builds up a charge during flow of current from said thyratron to the Schmitt trigger, and wherein after termination of said flow biases the thyratron to a high value temporarily preventing it from becoming conductive;

and a grounded remote manually controlled variable resistance connected across said condenser conducting current therefrom reducing its charge over a controllable interval, said interval being determined by adjustment of said resistance; and

a cathode follower in the circuit between said thyratron and Schmitt trigger duplicating the rise and fall of the charge in said condenser during the time interval of its gradual discharge and corresponding to the period when the thyratron is maintained non-conductive by said charge.

7. In the epilating machine of claim 1, and a series of neon tubes in said circuit interposed between said Schmitt trigger and clamp tube for maintaining when energized a substantially constant voltage.

8. In the epilating machine of claim 1, an adjustable timing means for holding the thyratron non-conductive after a fall of voltage from said audio amplifier, consisting of;

a condenser in parallel circuit with the output of said thyratron which builds up a charge during flow of current from said thyratron to the Schmitt trigger, and wherein after termination of said flow biases the thyratron to a high value temporarily preventing it from becoming conductive;

a grounded remote manually controlled variable resistance connected in parallel with said condenser conducting current therefrom reducing its charge over a controllable interval, said interval being determined by adjustment of said resistance;

and a Zener diode connected to said Schmitt trigger effecting said pulse of the Schmitt trigger before said condenser has lost all of its charge and before said thyratron is capable of again becoming conductive.

9. In the epilating machine of claim 1, a second normally non-conductive thyratron delivering a second timed voltage in less time than said first thyratron, and switch means developing a second voltage pulse in response to said second timed voltage interposed between said Schmitt trigger and clamp tube to deliver said second voltage pulse to said clamp tube grid.

10. In the epilating machine of claim 1, a second normally non-conductive thyratron developing a second timed voltage in less time than said first thyratron interposed between said Schmitt trigger and clamp tube;

and a second normally non-conductive Schmitt trigger interposed between said second thyratron and said clamp tube and functioning as a switch delivering voltage to said clamp tube in response to said second timed voltage biasing the latter's grid until said second thyratron is nearly discharged.

11. In the epilating machine of claim 1, a second normally non-conductive thyratron developing a second timed voltage in less time than said first thyratron interposed between said Schmitt trigger and clamp tube;

a second normally non-conductive Schmitt trigger interposed between said second thyratron and said clamp tube and functioning as a switch delivering voltage to said clamp tube in response to said second timed voltage biasing the latter's grid until said second thyratron is nearly discharged;

and a cathode follower interposed between said second thyratron and said second Schmitt trigger.

References Cited by the Examiner

UNITED STATES PATENTS

2,827,056 3/1958 Degelman ---------- 128—422

FOREIGN PATENTS

897,961 6/1962 Great Britain.

OTHER REFERENCES

1,139,927, November 1962, Germany.
1,146,989, April 1963, Germany.

RICHARD A. GAUDET, *Primary Examiner.*

W. E. KAMM, *Assistant Examiner.*