Dec. 31, 1963 G. E. PFANNER 3,115,857

METAL FORMING APPARATUS

Filed June 5, 1961 2 Sheets-Sheet 1

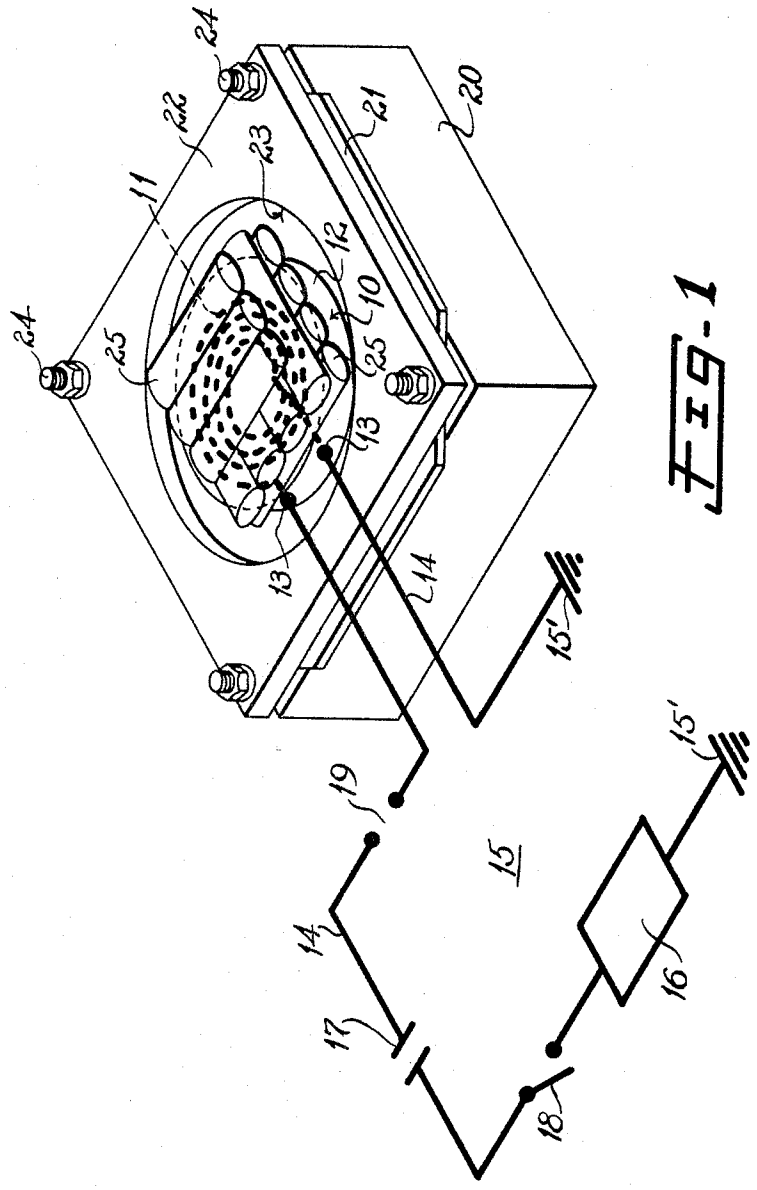

Fig. 1

INVENTOR.
GUNTHER E. PFANNER
BY
ATTORNEY

Dec. 31, 1963 G. E. PFANNER 3,115,857

METAL FORMING APPARATUS

Filed June 5, 1961 2 Sheets-Sheet 2

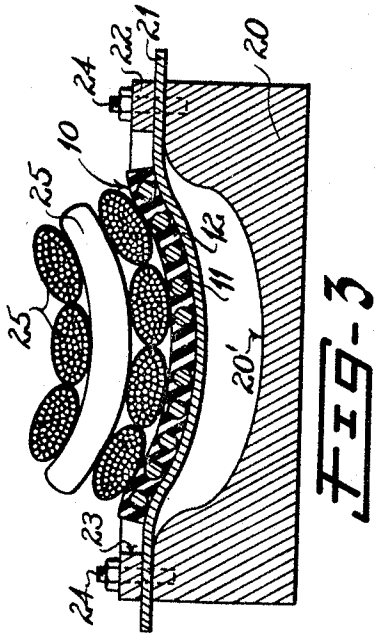

FIG-3

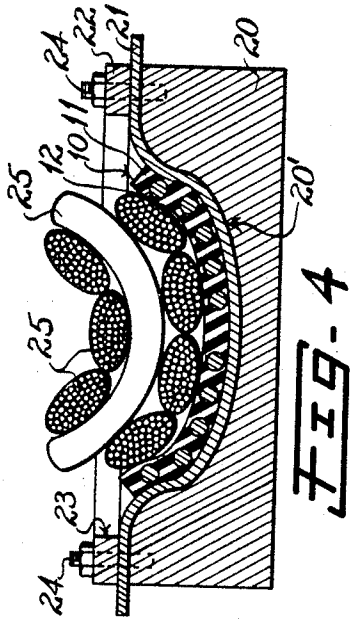

FIG-4

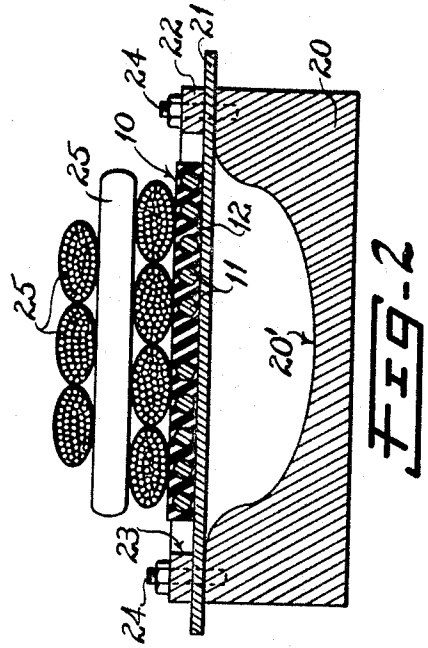

FIG-2

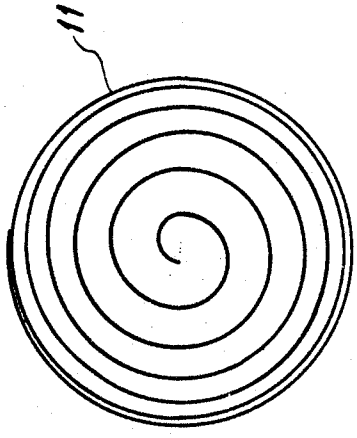

FIG-5

INVENTOR.
GUNTHER E. PFANNER

BY

John J. Sullivan

ATTORNEY

United States Patent Office

3,115,857
Patented Dec. 31, 1963

3,115,857

METAL FORMING APPARATUS

Gunther E. Pfanner, Lloyd Harbor, N.Y., assignor to Republic Aviation Corporation, Farmingdale, N.Y., a corporation of Delaware

Filed June 5, 1961, Ser. No. 114,892
6 Claims. (Cl. 113—44)

This invention relates to metal working apparatus and particularly to an apparatus for forming metal by electrical capacitor discharge, specifically, induction repulsion.

The present invention contemplates improvements in metal forming techniques by the provision of an apparatus which substantially simplifies metal forming operations with no attendant reduction in quality of the ultimate parts. Thus, comparatively complex and elaborate associated equipment, such as presses, matching die sets, and the like, heretofore employed in forming and stamping operations are eliminated.

Additionally, by means of and through the instant invention, forming and stamping operations heretofore considered unfeasible become readily accomplished. For example, relatively large parts, i.e., many feet in transverse dimension, are stamped and formed to ultimate shape and size without requirement of apparatus and structures of prohibitive size and massiveness.

At the same time, the instant apparatus is characterized by its extreme mobility in that it is adapted to be made portable for ready transport to remote work areas. Unlike existing apparatus and equipment, the metal forming element or tool of the present apparatus need not be custom-made and sized to a particular part or range of parts to be worked and formed. On the contrary, the forming tool of the apparatus proposed herein preferably comprises a compact unitary structure that conforms at all times during operation to a preestablished configuration of the ultimate part.

Broadly, induction repulsion has been heretofore proposed, but its use has been limited to tubular or cylindrical metal parts which have been swaged, pinched, etc., with little or no requirement to control the metal deformation accurately. The desired result has been obtained merely by placing a coil around the tube or cylinder and passing a relatively high current through the coil. The electromagnetic forces created by the current in the coil are directed against the cylinder which is deformed or pinched thereby.

Dies or die elements have also been proposed in prior induction repulsion processes which envision forming sheet metal as well as tubular workpieces to a desired configuration. Thus, relatively flat spiral coils are disposed adjacent the surface of a workpiece in opposition to a die defining the desired surface configuration. The electromagnetic forces produced by the current passing through the coil press localized portions of the workpiece against the adjacent die surface.

It is the purpose of the present invention, among other things, to make feasible for the first time the use of the broad concept of induction repulsion in sheet metal working generally. Thus, forming, stamping, blanking, drawing, and like metal working operations are substantially simplified, and the requirement of matched dies, presses and such equipment is eliminated.

To the above ends, it is herein proposed to fabricate a flat coil, i.e., one disposed in a single plane, and connected in an electric circuit for the periodic discharge of current therethrough to effect electromagnetic forces of predetermined magnitude against a sheet metal workpiece. This coil is fabricated of resilient metal and adapted to operate in conjunction with a single die element of the prescribed configuration and size whereby

the ultimate part is produced. In addition, the flat coil is enclosed or housed within a flexible matrix or blanket, allowing it to conform to and be maintained in intimate contact with the workpiece (with or without an application of external forces in addition to the weight or mass of the encapsulated coil, itself) throughout the forming operation to thereby insure maximum forming force on the workpiece.

The dimensions of the flat coil and its flexible housing relative to the die element and its forming surface configuration are not critical since its effective area will conform thereto. In this way a single, standard unit may be employed regardless of the relative size of the part to be produced. Where the formed area of the part is appreciably larger than the forming surface of the tool, it is produced by multiple forming operations, i.e., repeated electromagnetic hammering operations, on the workpiece until such workpiece eventually conforms to and duplicates the forming surface of the die.

With the above and other objects in view as will be apparent, this invention consists in the construction, combination and arrangement of parts all as hereinafter more fully described, claimed and illustrated in the accompanying drawings, wherein:

FIG. 1 is a perspective view of a metal forming tool constructed in accordance with the teachings of the present invention associated with a die block and workpiece to be formed thereby and a circuit diagram to control operation of the tool;

FIG. 2 is a transverse section taken through the tool, workpiece and die block illustrated in FIG. 1 prior to the forming operation;

FIG. 3 is a similar view after commencement of the forming operation;

FIG. 4 is a similar view upon completion of the forming operation; and

FIG. 5 is a plan view illustrative of one coil configuration particularly adapted for deep draw forming operations as contemplated in hemispherical or parabolic type shapes.

Referring more particularly to the drawings, the simplest form of apparatus illustrative of the underlying inventive concept is shown and described to facilitate an understanding thereof. This apparatus comprises essentially a metal forming tool **10** produced by a spiral winding or coil **11**, disposed in a single plane and embedded and enclosed within a flexible matrix **12**. The coil **11** is fabricated of a metal having high tensile strength and flexibility, preferably, steel cable surrounded by copper wire braid. At its extremities the coil **11** terminates in appropriate junctions **13** for connection by conductors or leads **14** into an electric power circuit **15**. At its opposite ends the circuit **15** is grounded as at **15'** and includes, in series connection, a source of electrical voltage **16** and a capacitor **17** adapted to be connected and disconnected by a suitable on-off switch **18**. Also in the circuit **15** between the capacitor **17** and the coil **11** is an additional switch means in the form of, for example, a spark gap **19**. Electrical voltage from the source **16** is thus supplied to the capacitor **17** and to the adjacent side of gap **19** when switch **18** is closed. A potential difference is thereby established across the spark gap **19**. This potential difference is selected at a predetermined value and, upon resistance breakdown of the gap **19**, current passes through the coil **11**. In this manner periodical discharges of selected value and frequency energize the coil **11**.

The coil **11** is adapted to work in conjunction with a forming block or die **20** on which a workpiece **21** is disposed and held in place in a conventional manner by means of a restriction plate **22**. A forming surface **20'** of selected size and shape corresponding to that desired

of the ultimate part to be formed is defined by the die block **20**, and the workpiece **21** is disposed on the die block **20** overlying this surface **20'**. The workpiece **21** is maintained in this position by means of the overlying restriction plate **22** which merely rests upon the workpiece, applying no additional force or pressure thereto, and is held in place by suitable nut and bolt means **24**.

The plate **22** is perforated centrally as at **23** to permit the tool **10** to be disposed on and against the workpiece **21** in opposition to the die **20**. Upon the discharge of current as above described, the electromagnetic forces created by the current passing through the coil **11** are directed on and against the workpiece, forcing it to conform to the forming surface **20'** of the die **20**.

During this formaing operation, the resilient coil **11** and its flexible matrix or blanket **12** are held at all times in intimate contact with the surface of the workpiece **21** being formed. To facilitate this, additional means may be employed to operate on and against the tool **10** in opposition to the workpiece **21**. This additional means may form an integral part of the tool **10**, comprising weight and/or fluid pressure means incorporated in the tool in the form of a chamber adjacent the blanket **12** adapted to contain weighty material or pressurized fluid of selected quantities and value. Rubber blanket forming presses currently being used throughout industry may be employed for this purpose. In any case, however, it is preferred that the means employed to maintain intimate contact between the tool surface and workpiece constitute supplemental means, i.e., independent means separable from the tool **10**. Since this means per se forms no part of the invention, it is illustrated by way of example simply as a number of loosely packed bags **25** of weighty particles such as metal pellets, buckshot, sand, or the like.

For the purpose of a clearer understanding of the inventive concept, the die block **20** and forming surface **20'** are illustrated as relatively small whereby the shape and area of the tool **10** substantially corresponds thereto. It is to be understood that where the part to be formed is of substantial size, the shape and area of the tool **10** would be relatively small. In this case the tool **10** is applied by successive operations to localized areas of the workpiece **21** adjacent the die surface **20'** until the ultimate part is eventually formed.

Moreover, in given applications the spacing of the several windings of the coil **11** may be established in a preselected order to concentrate the electromagnetic forces produced thereby on and against selected areas of the workpiece **21**. An example of one such spacing is illustrated in FIG. 5 wherein a coil turn configuration is shown that establishes a distance between adjacent portions of

the winding that is progressively smaller from the center of the coil outwardly. This coil configuration, retro-spiral, gives superior results in terms of sharper definition and depth when employed in deep-dish type parts such as hemispherical or parabolic shapes required of domes and like parts. Where conical-shaped parts have been produced it has been found that best results are obtained when the winding convolutions are developed into a progressive spiral, i.e., the distance between adjacent portions of the winding is progressively greater from the center of the coil outwardly.

The coil **11** may also be constituted by multiple tiers where greater forming forces are desired. In this case the winding is disposed in the desired number of tiers prior to the development of the next adjacent portion of the winding whereby the resulting electromagnetic forces of the several tiers substantially correspond in magnitude with the adjacent portions of the winding in the tier.

What is claimed is:

1. A metal forming apparatus comprising a die element defining a surface of selected configuration and size, and a resilient coil enclosed within a flexible matrix adapted to rest on and conform to the surface of a metal workpiece in opposition to said die element, and current discharge means connected to said coil and periodically operable whereby the electromagnetic forces accompanying each current discharge through said coil are directed against the workpiece.

2. The apparatus of claim 1 including additional means operative on and against said matrix whereby said coil is maintained a constant distance from the surface of said workpiece at each forming operation.

3. The apparatus of claim 1 wherein said coil is formed by copper-clad steel cable.

4. The apparatus of claim 1 wherein said coil is formed by a winding the adjacent portions of which are spaced one from the other a predetermined distance.

5. The apparatus of claim 1 wherein said coil is formed by a retro-spiral winding.

6. The apparatus of claim 3 wherein said additional means includes a container having resilient walls and filled with a comparatively weighty substance.

References Cited in the file of this patent

UNITED STATES PATENTS

2,431,943	Land et al.	Dec. 2, 1947
2,916,771	Lang et al.	Dec. 15, 1959
2,976,907	Harvey et al.	Mar. 28, 1961

FOREIGN PATENTS

489,477	Italy	Mar. 28, 1961