Aug. 11, 1931. H. M. DAVIS 1,818,538

ADVERTISING DEVICE

Filed Nov. 20, 1929 4 Sheets-Sheet 1

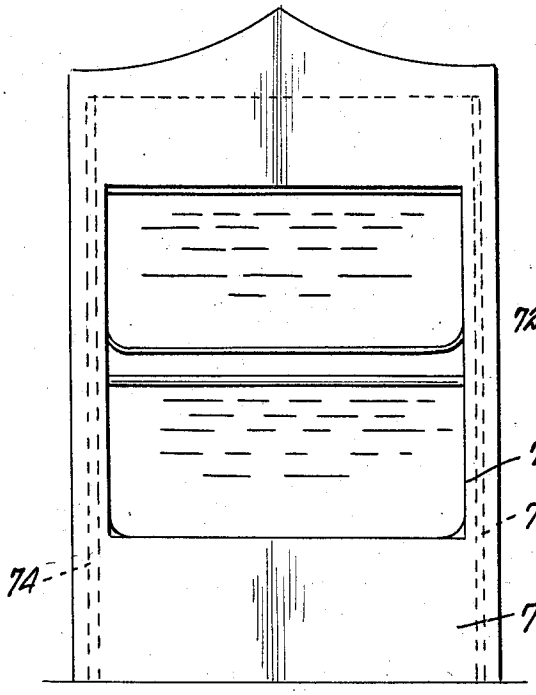

Fig. 1

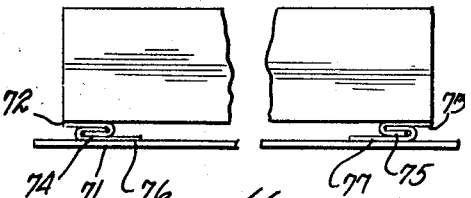

Fig. 2

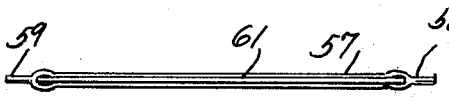

Fig. 3

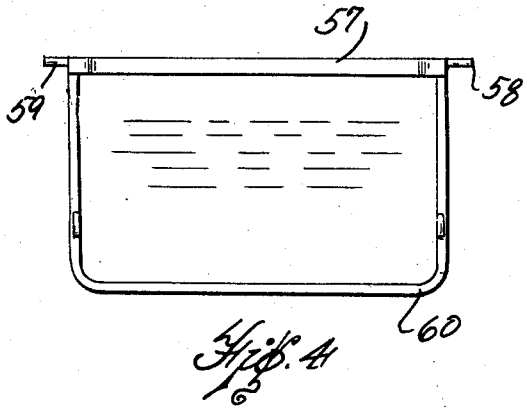

Fig. 4

INVENTOR.
HARLOW M. DAVIS

BY

Charles E. Wiener

ATTORNEY.

Aug. 11, 1931. H. M. DAVIS 1,818,538

ADVERTISING DEVICE

Filed Nov. 20, 1929 4 Sheets-Sheet 2

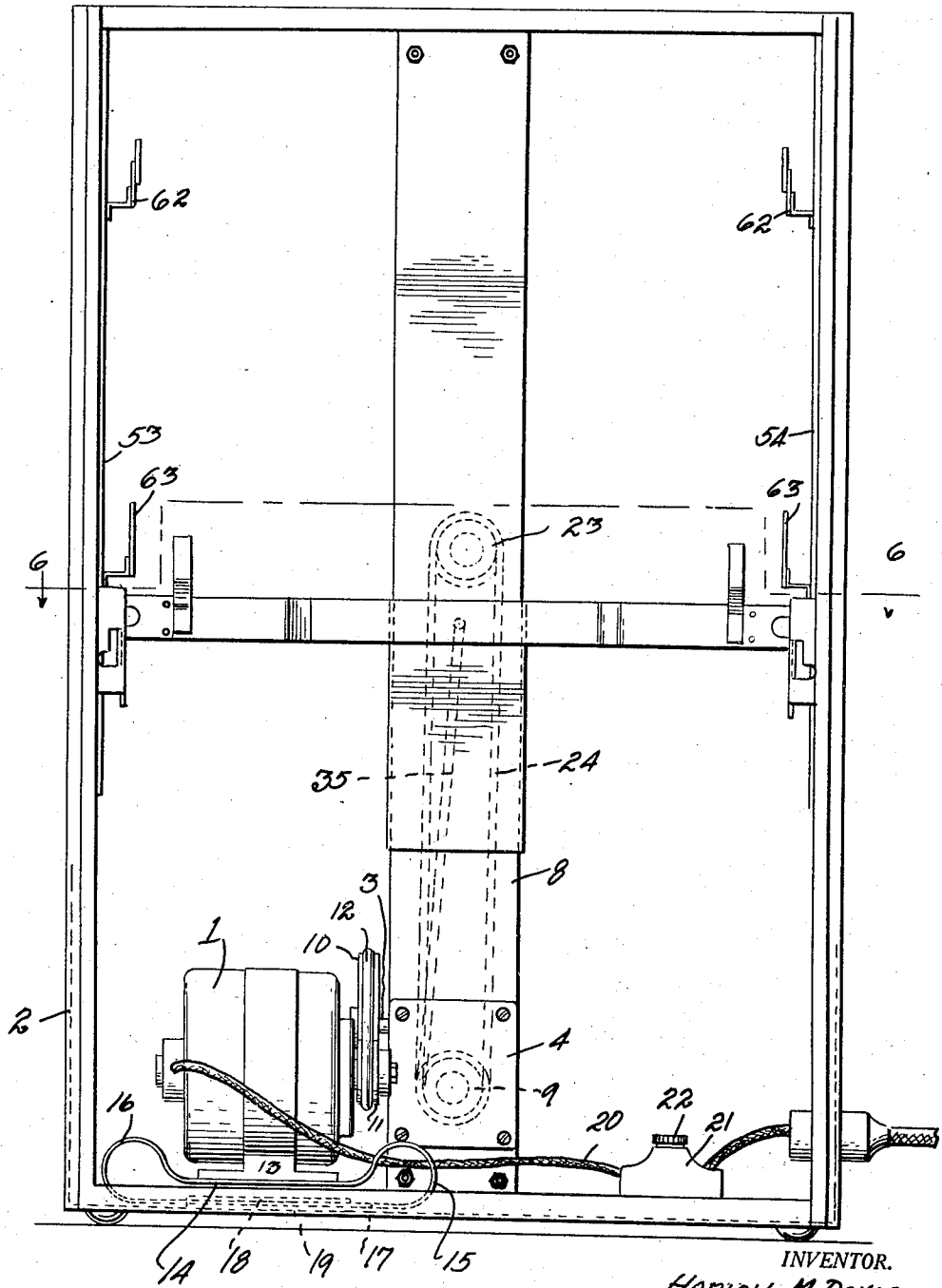

Fig. 5

INVENTOR.
HARLOW M. DAVIS
BY
Charles E. Warren
ATTORNEY.

Aug. 11, 1931. H. M. DAVIS 1,818,538

ADVERTISING DEVICE

Filed Nov. 20, 1929 4 Sheets-Sheet 3

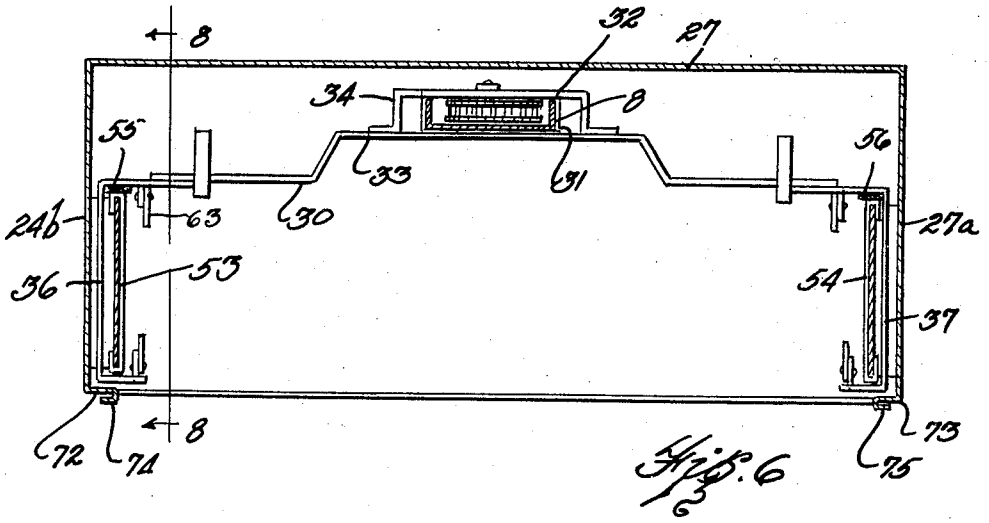

Fig. 6

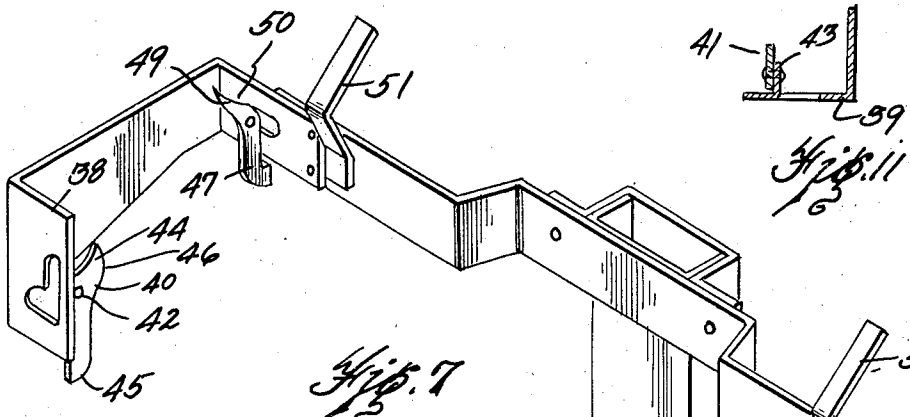

Fig. 7

Fig. 11

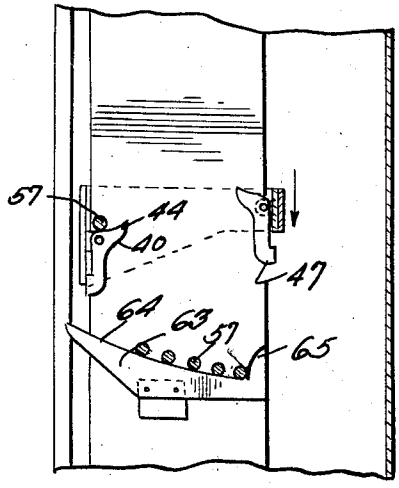

Fig. 8

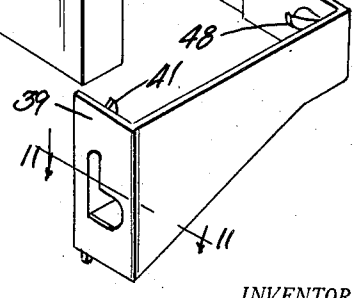

INVENTOR.
HARLOW M. DAVIS

BY

ATTORNEY.

Aug. 11, 1931. H. M. DAVIS 1,818,538

ADVERTISING DEVICE

Filed Nov. 20, 1929 4 Sheets-Sheet 4

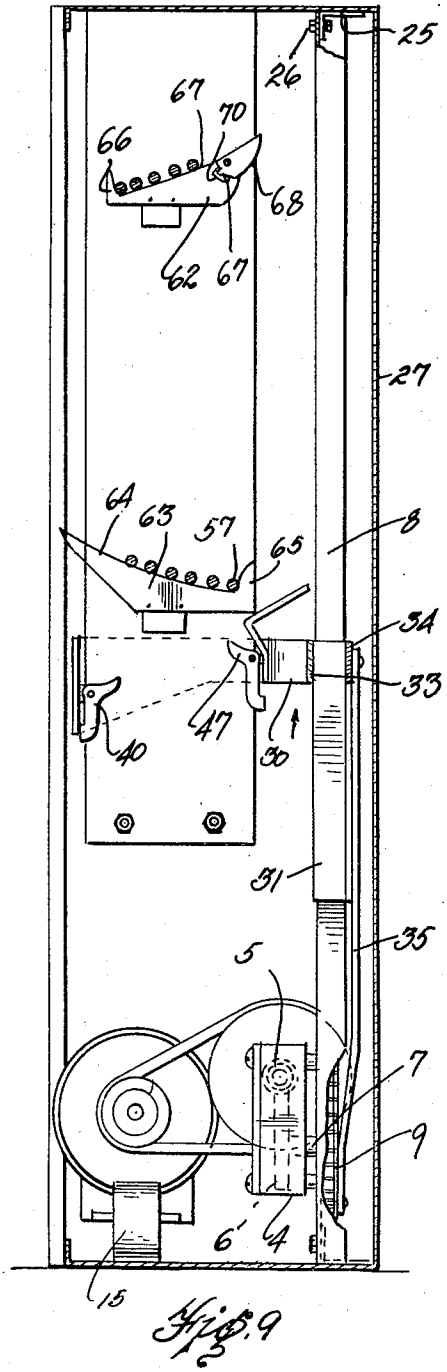

Fig. 9

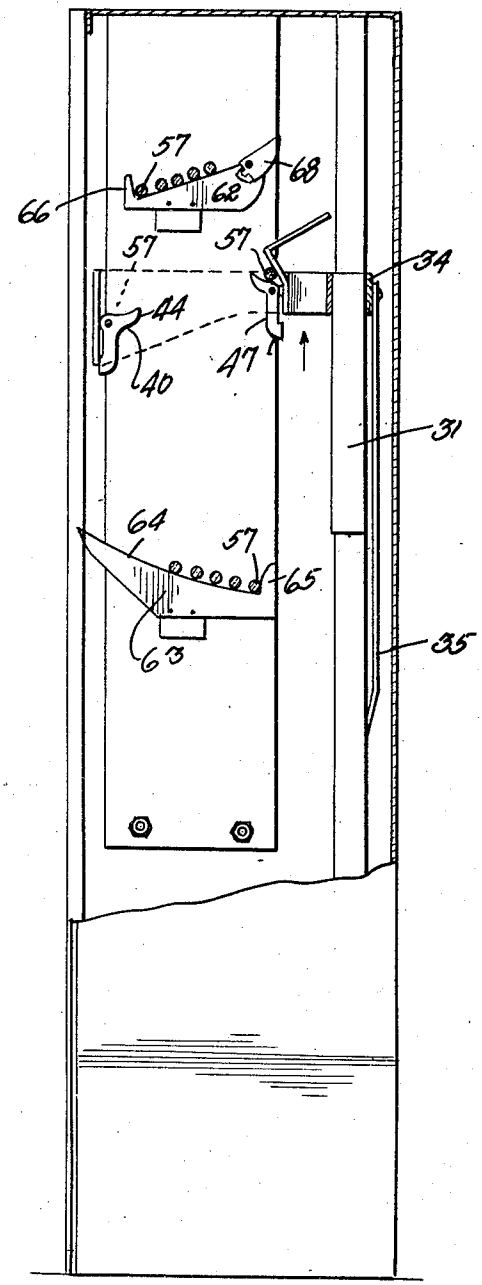

Fig. 10

INVENTOR.
HARLOW M. DAVIS

BY

Charles E. Wiancr
ATTORNEY.

Patented Aug. 11, 1931 1,818,538

UNITED STATES PATENT OFFICE

HARLOW M. DAVIS, OF BUFFALO, NEW YORK

ADVERTISING DEVICE

Application filed November 20, 1929. Serial No. 408,479.

This invention relates to advertising devices of that character in which a series of cards or mats bearing advertising or other matter are successively exposed to view for a predetermined length of time, the construction being such that two cards or mats are displayed at a time and the object of the invention is to provide a simplified construction in devices of this character and to provide a metal or like casing having a removable front panel provided with a central aperture through which the cards in the casing are displayed to view, the provision of a removable front panel permitting a ready change in form of the device to conform in design to any particular character of window display and may be made of cheap cardboard readily permitting any artistic design to be printed or painted thereon also in conformity with the character of goods being advertised and in association with the goods in the store window or other display space.

The device is similar in general character to that shown in the U. S. patent to Albert K. Davis, No. 1,540,830, issued June 9, 1925, and a feature of this construction, in addition to that above mentioned, is in the provision of a driving motor in the base of the case and a construction permitting a reduced length of chain mechanism and linkage through and by means of which the cards are moved from one position to another and an arrangement of parts to secure practically noiseless operation.

An additional feature is involved in the manner of mounting the drive motor whereby the vibration of the motor is not transmitted to the casing. With a metal casing and the motor rigidly attached thereto, the casing becomes a sound box whereby vibration of the motor becomes detrimental to use of the device through the resultant noise.

Additional features and objects of the invention reside in the specific details of construction of the driving mechanism and connection of a transfer frame therewith by and through which the cards are moved from and to display position all as is hereinafter more fully described. These and other objects and novel features of the invention are hereinafter more specifically set forth, and the preferred form of construction of a device embodying my invention is shown in the accompanying drawings in which—

Fig. 1 is a diagrammatic front elevation of my improved advertising device.

Fig. 2 is a plan view thereof showing the mode of connection of the front panel with the casing.

Fig. 3 is a plan view of a card carrying frame.

Fig. 4 is an elevation thereof.

Fig. 5 is an enlarged view of the device showing the operating mechanism in front elevation.

Fig. 6 is a section taken on line 6—6 of Fig. 5.

Fig. 7 is a perspective view of the transfer device or frame through and by means of movement of which cards are removed from the front of one bank and deposited at the rear of another.

Fig. 8 is a section taken on line 8—8 of Fig. 6.

Fig. 9 is a vertical transverse section of the device showing the transfer member in its lowermost position.

Fig. 10 is a similar view showing the transfer device intermediate its lower and uppermost point of movement.

Fig. 11 is a section taken on line 11—11 of Fig. 7.

In previous constructions, such for instance as shown in the U. S. Patent No. 1,540,830 above mentioned, the motor is mounted in the upper part of the case and several pulleys are necessarily utilized to secure the required slow speed of movement of the transfer device and a considerable length of chain and intervening mechanism. By placing the motor 1 in the lower part of the casing 2, it is positioned closely adjacent to the drive shaft 3 by which the transfer mechanism is operated. This shaft 3 is mounted in a casing 4 and has a worm 5 thereon, shown in dotted lines in Fig. 9, meshing with a worm wheel 6 in the casing.

The worm wheel is provided with a shaft 7 extending through the casing 4 and a vertical channel member 8 in the channel on which is positioned a sprocket 9. The shaft 3, as shown in Fig. 5, has a pulley 10 thereon and the shaft of the motor has a pulley 11 thereon, the two pulleys being connected by a yieldable belt 12 preferably of rubber.

The motor is formed with a base 13 which is supported on a spring metal strip 14 looped as at 15 and 16 at its opposite ends and having a portion 17 extending parallel with the part 14 and directly therebeneath by means of which it is secured to the floor of the casing. Preferably a metal plate 18 is positioned on the upper face of the portion 17 of the suspension device and a rubber or other pad 19 between the said member 14 and the bottom of the case. The motor is provided with the usual circuit wires enclosed in the conduit 20 leading to a block 21 having a fuse plug 22 and from there to the exterior of the case for connection with an energizing circuit. The sprocket 9 is adjacent the bottom of the vertical channel member or standard 8 and about midway the height of the casing and length of the channel is an idler sprocket 23 supported by the channel member. A sprocket chain 24 extends about the two sprockets. The channel 8 is secured in place at its upper and lower ends by means of similar brackets 25 having respectively upwardly and downwardly extending flanges to receive a bolt or bolts 26 extending through the base of the channel 8 and this portion of the brackets 25. The channel 8 is spaced forwardly of the rear wall 27 of the cabinet or casing as is shown more clearly in Fig. 9. I provide what I have termed a "transfer frame" 30 which is vertically reciprocatable in the casing on the channel 8 and this reciprocation of the member 30 is accomplished in the following manner:

A channel guide member 31 engages about the channel 8, as will be seen more clearly in Fig. 6, and between the flanges of the member 31 and the flanges of the channel 8 and also between the base portions of these two members is provided a strip of felt or other desirable material indicated at 32 to prevent a metal to metal contact at this point and thus secure silence in operation which is one of the features of my improved construction. The transfer frame 30, as may be seen in Fig. 6, has a rearwardly extending or offset part 33 attached directly to the member 31 adjacent its upper edge and a yoke 34 of U form has the end portions thereof secured to this part 33 and extends about the channel 8 out of contact therewith. A pitman 35 is pivoted at one end to the center of the yoke at the rear side as will be understood from Fig. 6 and the opposite end is pivoted to a link of the chain as will be understood from Fig. 5. Thus, by rotation of the sprockets and the chain thereon the transfer device is moved upwardly and thence downwardly as the point of connection of the pitman 35 with the chain passes from one side to the other of the pulleys. By this arrangement I am enabled to materially reduce the length of the chain and to reduce the size of the apparatus correspondingly and yet secure the necessary movement of the transfer device in moving the cards as is hereinafter described.

The transfer device is similar in general respects than that shown in the said Patent No. 1,540,830, it being formed with U-shaped end yokes 36 and 37 and the inbent ends 38 and 39 respectively of the transfer frame carry a catches 40 and 41 which are pivoted at 43 to a part struck out from the respective members 38 and 39 as will be understood from Fig. 11. These catches 40 and 41 have a curved forwardly inclined upper face 44, as shown at the left of Fig. 7, and a depending part 45 providing a construction tending to hold the pivoted members in the position shown but permitting the members 40 and 41 to tilt on engagement of the forwardly projecting portion 46 thereof with any fixed part as hereinafter shown. At the rear of the frame practically directly opposite the catches 40 and 41 are the pivoted latches 47 and 48 which are likewise pivotally supported on a part struck up from the frame, each having a downwardly extending part tending to hold these latches in the position shown in Fig. 7 and permitting the latches to be turned with the lower ends inwardly upon the upper curved end 49 thereof engaging a stationary element. The upper face 50 of each of these last named latch members normally lies in angular relation to the frame as shown.

The transfer frame has attached to the rear side thereof the inwardly projecting reversely bent fingers 51 and 52 near each latch member 48 and 49 respectively. These fingers, as will be seen more clearly in Figs. 9 and 10, are forwardly and then rearwardly inclined.

The opposite sides of the casing 2 have attached thereto the respective vertical bars 53 and 54, the edges of which are return bent to provide a rounded smooth edge portion avoiding necessity of finishing the same and the yoke ends 36 and 37 of the transfer frame extend between the side walls of the casing and each of these bars 53 and 54, as shown more clearly in Fig. 6. The transfer frame 30 at the points opposite one edge of the members 53 and 54 is provided with a felt or other contact member 55 and 56 respectively to avoid metal to metal contact at this point and the forward ends of these yoke members 36 and 37 are held in sufficiently spaced relation from the

forward edge of the vertical bars 53 and 54 so that there is no possibility of metal contact at that point with the vertical bars.

The cards or mats here shown are formed of a frame consisting of the horizontal upper part 57 having the rounded ends 58 and 59 and a U shaped frame 60 has the upper ends of the legs thereof secured to this cross bar 57.

As will be seen in Fig. 3, this upper cross member 57 is formed with a slot 61 and it is to be understood that the U frame 60 is of channel form and so attached to the member 57 as to permit introduction of a card through the slot 60 and into the channels of the U member, the construction thus permitting ready removal or insertion of cards. The side bars 53 and 54 have an upper raceway 62 on opposite sides of the casing, as shown in Fig. 5, and a lower raceway 63 also on opposite sides as shown in Fig. 5. The lower raceways each have a curved upper face 64 and the forward point thereof extends forwardly beyond the forward point of the upper raceway 62. This arrangement provides that the rounded end portions 58 and 59 of the frame lying on this inclined surface 64 tend to move by gravity toward the rear of the raceway. At the rear the raceways 63 have an upwardly extending portion 65 providing a stop. The upper raceways at the forward end are provided with a similar stop 66 determining the position of the forward card of the upper bank and the upper face 67 of the raceways 62 are forwardly inclined to cause the cards to move forwardly on this incline. The rear end of each raceway 62 is provided with a pivoted latch 68 having a straight upper face somewhat more sharply inclined to the horizontal than the face 67 of the raceway and projecting to the rear thereof in such manner that the weight of this rearwardly projecting portion is sufficient to normally position the latch as shown in Fig. 9.

To limit the movement of the latch on its pivot I provide a slot 69 in the rear portion of the raceway and the latch is provided with an inturned lug 70 riding in this slot which will permit the latch to move upwardly from the position shown in Fig. 9. It will thus be seen that the cards are arranged in two banks in superimposed relation and the reciprocating transfer member takes the rear card from the lower bank on the lower raceways and deposits the same at the rear of the cards on the upper raceways and in so doing removes a card from the front of the upper raceways and deposits it on the lower raceways at the front thereof. Thus, each card is in view part of the time at the front of the bank on the upper raceway and for a similar period of time at the front of the bank of the lower raceway.

The operation of the transfer device is as follows: With the parts in the position shown in Fig. 9 and upward movement of the transfer device 30 in the direction of the arrow shown in the said figure, the latch members 48 and 49 at the rear of the transfer device move upwardly between the raceways 63 and the supportings bars 53 and 54 on opposite sides of the casing and engage the ends 58 and 59 of the card frame extending into said space. As the transfer device and latch members 48 and 49 come to engagement with these rounded ends of the card frame, the said frame slides down the inclined face 50 of the latch members, as will be understood from Fig. 10.

As the movement upwardly of the transfer device continues above the position shown in Fig. 10, these rounded ends 58 and 59 strike the respective latches 68 moving the same upwardly permitting these ends of the bar 57 to pass above the latch which immediately drops forwardly due to its construction heretofore described and into the path of movement of the bar ends on downward movement of the transfer device. This movement therefore discharges the frame and advertising matter or device carried thereby to the rear side of the upper bank it moving downwardly on the inclined face 67 of the raceways 62. On this upward movement of the transfer device, the front latch members 40 and 41 also pick up the forward card of the upper bank due to the fact that the front portion 46 is of sufficient length to engage the rounded ends of the frame 57 of the front card. The transfer device rises to such point that the catch 40 carries the forward frame 57 of the upper bank above the stop 66 of the raceways 62 and thereupon this frame rides toward the front on the forwardly curved upper face of the catch 40 as indicated in dotted lines in Fig. 10. Thus, as this forward frame of the upper bank is lifted from its position on the raceways 62 and moved forwardly beyond the end of the stop 66, the downward movement of the transfer device carries the removed card frame downwardly on its reverse movement and finally deposits the same on the front projecting end of the raceways 63 for the lower bank.

It will be noted also that, the transfer device having been moved above the upper bank, the frames on the said upper raceways 62 will tend to roll forward and occupy the space from which a card has just been removed but on downward movement of the transfer device the forward end 46 of the catches 40 and 41 may strike the newly positioned forward frame on the upper raceways. For this reason the catch members 40 and 41 are pivoted to permit the lower ends to swing outwardly without disturbing the newly positioned frames. For the same reason the latch members 47 and 48 are

pivoted. This permits these members on downward movement of the transfer device (at which time there is no frame carried by these latches) to pass downwardly below the rear frame 57 of the lower bank. In passing this frame the forward rounded end 49 of the latch members 47 and 48, on striking the extended ends of the frame 57, merely turn backwardly and then again turn forwardly to the position shown in Fig. 9 so that upon succeeding upward movement the rearmost frame is raised from position and carried upwardly as before stated.

The fingers 51 and 52 extend forwardly to such position that, as a frame 57 is deposited upon the upper raceways and catch members thereof, following downward movement of the transfer device, the deposited frame, if not moved by gravity, is pushed forwardly on the raceway.

Its delivery from the transfer device to the raceway and its movement downwardly is thus insured. Thus through reciprocation of the transfer device a card is moved from the rear of the lower bank and deposited at the rear of the upper bank on the upward movement and on the downward movement a card is likewise removed from the front of the upper bank and deposited at the front of the lower bank. These two front cards are displayed to view through an opening 70 in the removable front plate 71 of the casing. The casing is preferably of sheet metal and has the rear wall 27 and end walls 27*a* and 27*b* and at the front side has vertical marginal portions 72 and 73 which, as shown in Fig. 2, have return bent edges 74 and 75 in spaced relation with the body thereof providing vertical grooves. The front plate or panel 71 may be of cardboard as heretofore stated and therefore is inexpensive material and may be shaped in any desired manner to conform to the character of decoration of any display and the face thereof may be painted or printed and arranged to support various articles being advertised by this device. To enable changes to be made daily or more often if desired, this plate is made removable. For this purpose the rear face of the plate has secured thereto a sheet metal return bent clip 76 and 77 adapted to fit into the vertical grooves formed by the return bent ends 74 and 75 of the casing. This arrangement of the parts is shown in Fig. 2 in plan view from which it will be understood that the front panel or plate may be removed by pulling upwardly thereon and a new and differently designed front panel substituted therefor.

It is believed evident from the foregoing that the device is comparatively simple and inexpensive in construction and well adapted for the purpose stated; that it embodies several new and unique features—namely, the construction of the relatively movable parts to avoid any metal to metal contact whereby the sliding of one part on another is practically noiseless, the mounting of the electric motor in such manner and the drive mechanism of such character that the vibration of the motor is not transmitted to the casing, that the driving gear, by means of which the chain is operated in movement of the transfer device, are enclosed in a case or housing attached to the lower end of the vertical guide member or channel 8 which permits the gears to be packed with grease, and that in the formation of the vertical guide member of channel form with the open side facing to the rear of the cabinet the chain and sprockets and such parts are so separated from the banks of cards that grease or oil carried by the chain is not liable to be spattered or thrown onto the cards, and that by the arrangement of parts, particularly the drive mechanism etc., in the bottom and the pitman connection of the transfer frame to the chain provides a compact structure avoiding excessive height of casing, and that the various objects of the invention are attained by the construction described.

Having thus fully described my invention, its utility and mode of operation, what I claim and desire to secure by Letters Patent of the United States is—

1. In a device of the character described, a casing, means for sustaining two banks of cards therein, said casing having an open front adjacent the faces of the front cards of each blank, said front of the casing being provided with a pair of vertically grooved portions, a cover member for the casing having an opening the area of which is approximately equal to that of the two front cards of said banks to expose the advertising matter thereon to view, a pair of strips on the said cover member adapted for engagement with the grooved portions of the case permitting removal or insertion of the cover without disarrangement of the operative parts of the mechanism, and means for transferring the cards from one bank to the other.

2. In a device of the character described, a casing, means for supporting cards therein in two banks, said casing having a removable front panel provided with an opening adjacent the faces of the front cards of each bank through which the said cards are exposed to view, a transfer device vertically movable in the casing adapted to take a card from the rear of the lower bank and deposit it at the rear of the upper bank in its upward movement, and near the completion of the upward movement remove the card from the front of the upper bank and on downward movement deposit the same at the front of the lower bank, means for reciprocating the transfer device comprising

a standard, a guide member slidable thereon to which the transfer device is attached, a pitman pivotally connected with the transfer frame at one end, a pair of sprockets in vertically spaced relation on the standard, a sprocket chain thereon, the other end of the said pitman being connected to a point on the chain whereby the pitman is caused to move upwardly and downwardly, a drive means for the lowermost of the said sprockets including an electric motor, a flexible mounting for the motor to prevent vibration thereof being transferred to the casing consisting of a strip of spring metal bent upon itself to form two parallel upper and lower portions, the lower one of which is secured to the casing and the upper one of which is formed centrally to provide a seat for the motor with the end portions connecting the two horizontal parts formed in a loop, and a yieldable connection between the motor and the driving gear whereby the sprockets may be driven.

3. In a device of the character described, a hollow casing, means for sustaining cards therein in an upper and a lower bank, a standard at the rear of the said banks, a transfer device including a guide member slidable on the said standard, said transfer device also being provided with means whereby in its revolution a card is moved from the lower to the upper bank at the rear and from the upper to the lower bank at the front, and a non-metallic element between the guide member and the standard.

4. In a device of the character described, a casing, a vertically positioned standard therein, means within the casing for supporting a series of cards or mats in two banks one above the other, a member reciprocatable on the standard and adapted to change the cards in its reciprocation from one bank to the other whereby the cards are successively brought to display position at the front of the banks, said casing having a front panel formed with an opening to expose the two front cards of the banks to view, reciprocating means for said member comprising a pair of sprockets one at the lower end of the standard and the other vertically thereabove intermediate the length of the standard, a chain connecting the sprockets, a pitman connected at one end to the reciprocating member and at the other end to a point on the chain whereby, through movement of the chain over the sprockets, the said pitman is caused to reciprocate said member, driving means for the lowermost of said sprockets comprising a casing mounted on the lower end of the transfer member in spaced relation, a shaft on the lower sprocket extending into the casing, a worm wheel in the casing on the said sprocket shaft, a cross shaft having a worm meshing with the worm wheel and extending to the exterior of the casing, a pulley on said extension of the worm shaft, a drive motor, a drive pulley, a flexible belt running over the said pulleys, and a flexible support for the motor, said housing for the worm and worm gear providing a receptacle for grease.

5. In apparatus of the character described, a casing, means for sustaining advertising cards in two banks therein one over the other, a reciprocating member adapted to remove the cards from one bank to the other whereby the cards are successively brought to the front of the said banks, said casing having an opening through which the cards are exposed to view, a standard consisting of a channeled metal member, a mounting for the reciprocating member comprising a channeled guide member fitting over the channeled standard, nonmetallic material secured to the guide member and positioned between the said member and the standard thereby avoiding metal to metal contact for the purpose stated, said channel member having the open face toward the rear of the casing and the reciprocating member including a frame secured to the guide member and having a portion extending about the standard, the guide member preventing lateral displacement of the frame and the portion encircling the standard preventing any material displacement of the guide member at a right angle to the plane of movement of the guide member, a pair of sprockets supported in the standard, a chain connecting the sprockets, a pitman connected with the said reciprocating member at the rear of the standard and at the other end connected with the chain, and means for driving one of the sprockets.

6. In apparatus of the character described, a casing, a series of cards supported therein in two banks one above the other, upper and lower raceways for the respective banks, the upper raceways being forwardly inclined and the lower raceways being rearwardly inclined, frame members for carrying advertising matter having end portions supported on the respective raceways and extending therebeyond, a vertical standard centrally of the casing, a transfer device reciprocatable on the standard, said transfer device including a pair of front pivotally supported latch members having upwardly forwardly inclined upper faces and a pair of rear pivotally supported latch members having rearwardly inclined upper faces, the said forward latches moving in a path to engage beneath the ends of the forward frame of the upper bank and, by reason of the forwardly inclined faces as the frame is raised from the raceway it automatically moves forwardly by gravity in the said latches whereby it may be moved down-

wardly past the said upper raceways, the raceways for the lower bank projecting into the path of movement of the frame while carried by the said forward latch members whereby through downward movement of the transfer device the advertising frame is deposited at the front of the lower raceway, said rear latch members normally moving in a path to engage the rear frame of the lower bank on upward movement of the transfer frame, the upper rearwardly inclined faces causing the said advertising frame to move rearwardly as it is removed from the lower raceways, the rear ends of each raceway for the upper bank having a pivoted latch extending rearwardly into the path of movement of the advertising frame carried by the transfer device and upon upward movement of the transfer device and frame being turned on their pivots to permit the said advertising frame to pass thereabove whereupon the latch on the said upper raceways returns to normal position and on subsequent downward movement of the transfer device strips the advertising frame therefrom, said transfer device further having a pair of forwardly inclined fingers extending forwardly of the frame carried on the rear latch members of the transfer device and providing a means to insure movement of the advertising frame off from the latch members onto the upper raceways after the advertising frame is positioned on the said latch members, and means for reciprocating the transfer device.

In testimony whereof I sign this specification.

HARLOW M. DAVIS.