US 20100154918A1

(19) United States

(12) Patent Application Publication

(10) Pub. No.: US 2010/0154918 A1

(43) Pub. Date: Jun. 24, 2010

Li et al.

(54) **INTEGRALLY-WOVEN THREE-LAYER HEATING TEXTILE**

(75) Inventors: **Chen-Liang Li**, Taipei County (TW); **Kuo-Hsiang Wang**, Taipei City (TW)

Correspondence Address:
JIANQ CHYUN INTELLECTUAL PROPERTY OFFICE
7 FLOOR-1, NO. 100, ROOSEVELT ROAD, SECTION 2
TAIPEI 100 (TW)

(73) Assignee: **TAIWAN TEXTILE RESEARCH INSTITUTE**, Taipei Hsien (TW)

(21) Appl. No.: **12/345,594**

(22) Filed: **Dec. 29, 2008**

(30) **Foreign Application Priority Data**

Dec. 19, 2008 (TW) 97149763

Publication Classification

(51) **Int. Cl.**
D03D 11/00 (2006.01)

(52) **U.S. Cl.** **139/412**

(57) **ABSTRACT**

An integrally-woven three-layer heating textile is provided. The integrally-woven three-layer heating textile includes a heat-isolated fabric layer, a thermal function fabric layer, a plurality of conductive yams and a plurality of connecting yarns. The conductive yarn is distributed between the heat-isolated fabric layer and the thermal function fabric layer. The connecting yam interlaces the heat-isolated fabric layer and the thermal function fabric layer so that the conductive yam is sandwiched between the heat-isolated fabric layer and the thermal function fabric layer.

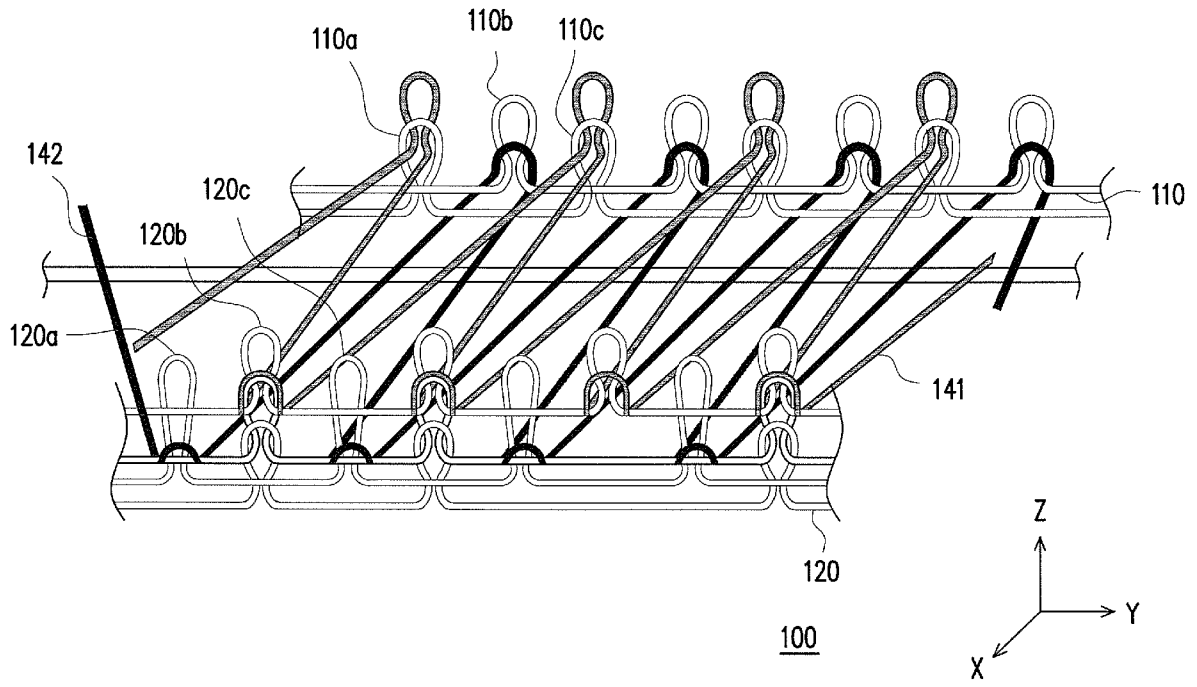

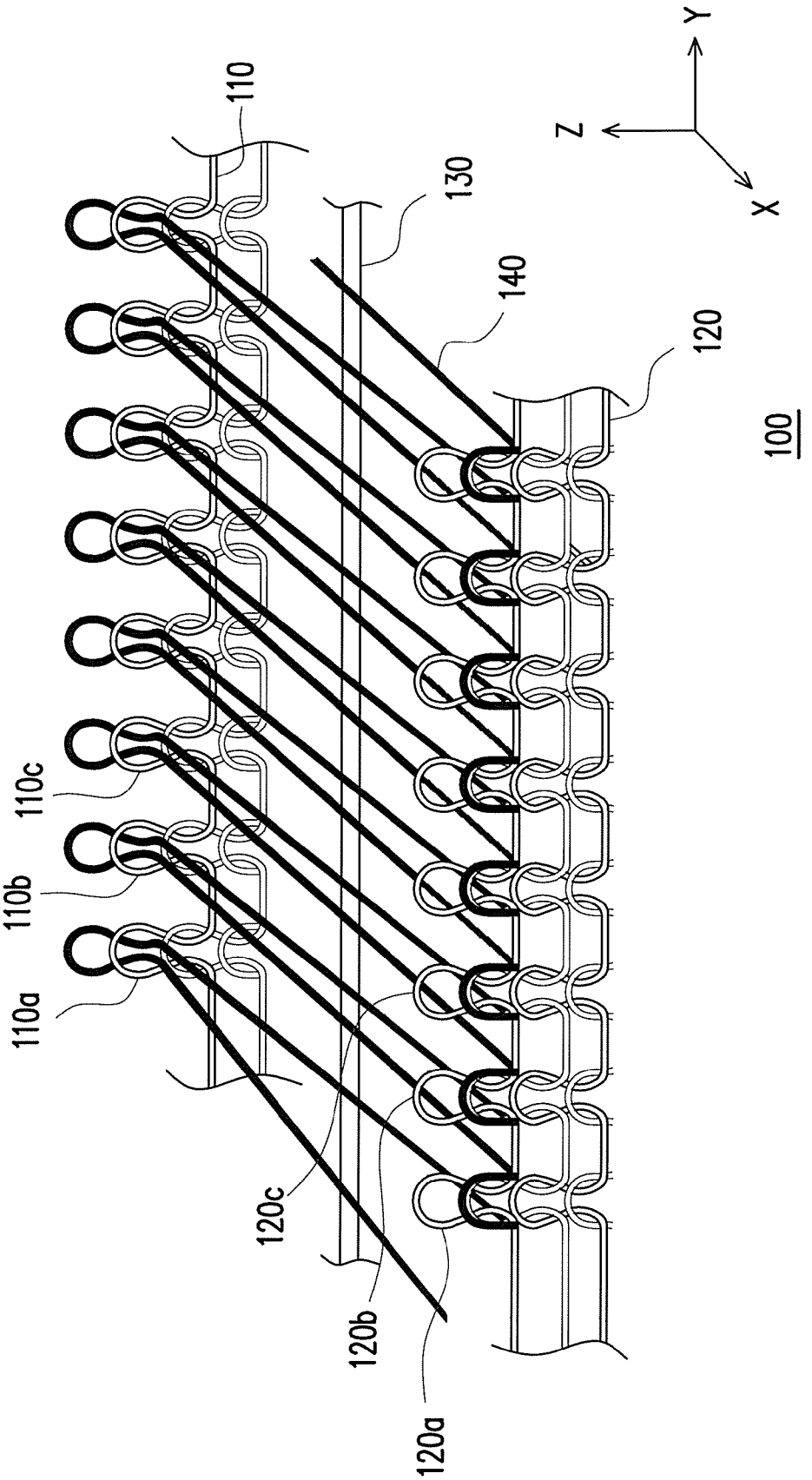

FIG. 1

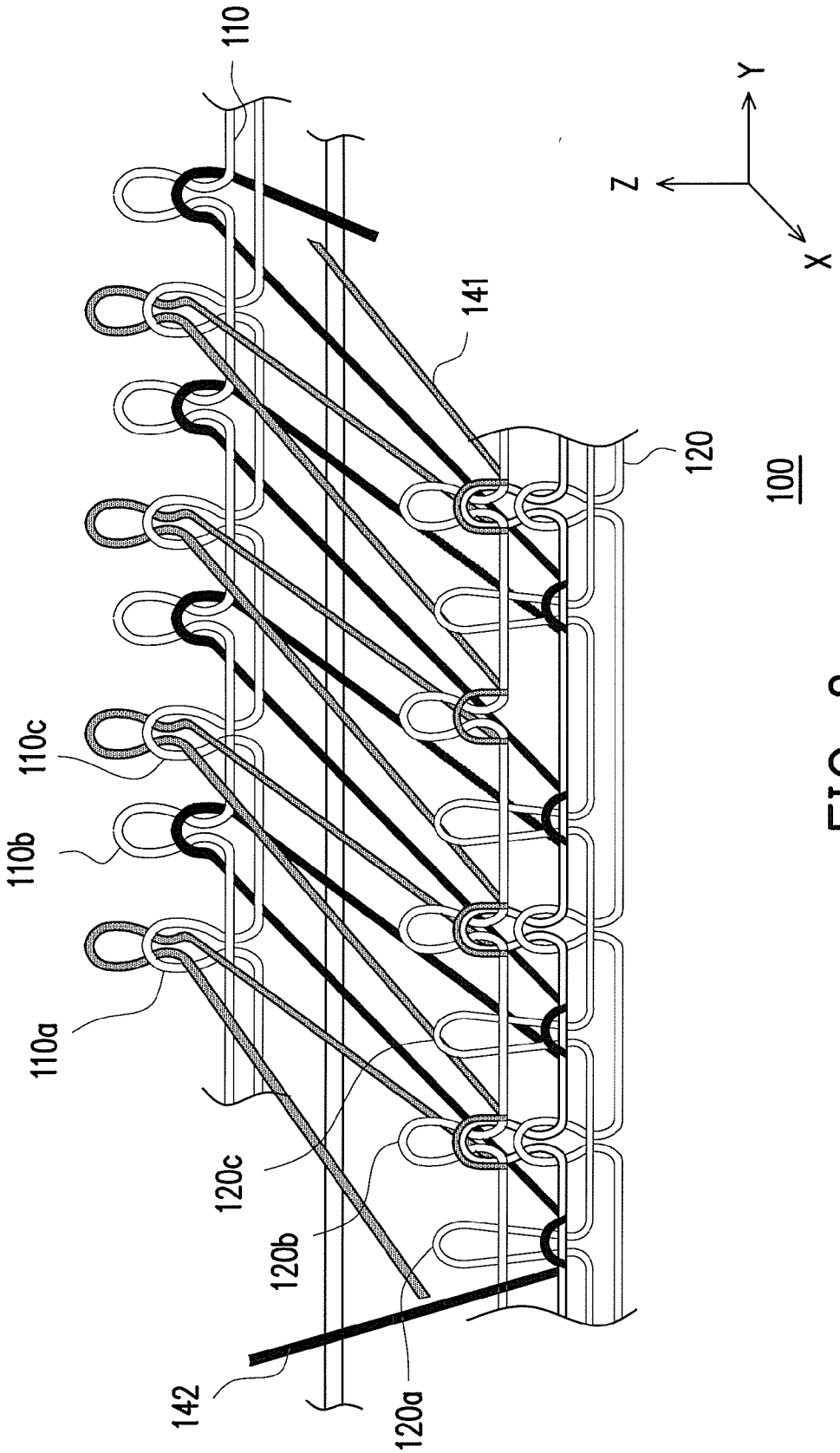

FIG. 2

INTEGRALLY-WOVEN THREE-LAYER HEATING TEXTILE

CROSS-REFERENCE TO RELATED APPLICATION

[0001] This application claims the priority benefit of Taiwan application serial no. 97149763, filed on Dec. 19, 2008. The entirety of the above-mentioned patent application is hereby incorporated by reference herein and made a part of specification.

BACKGROUND OF THE INVENTION

[0002] 1. Field of the Invention

[0003] The present invention is related to a textile, and particularly to an integrally-woven three-layer heating textile.

[0004] 2. Description of Related Art

[0005] Under the trend of globalization, the textile industry is facing severe competition, and textile manufacturers have to continue researching and developing new technology and diversified products to keep up with the competition worldwide. In order to satisfy diversified demands from consumers, a plurality of multi-functional textile products are already available in the market, such as water-proof textile, heat-isolated textile or electric-heating textile.

[0006] A general electric-heating textile has a structure including a surface layer, a heating layer, and a heat-isolated layer. A manufacturing process of the electric-heating textile includes first weaving the surface layer, the heating layer and the heat-isolated layer and assembling the surface layer, the heating layer and the heat-isolated layer by sawing or adhering so that the heating layer is sandwiched between the surface layer and the heat-isolated layer.

[0007] However, the manufacturing method of general electric-heating textiles not only requires one more sawing or adhering process to stack the three layers, but the sawing or adhering process is likely to allow air existing between the layers and thus forming air layers. A thermal conductivity of air is lower than a thermal conductivity of a general surface layer, a general heating layer or a general heat-isolated material, and hence the air layers reduce the thermal conductivity of the electric-heating textile. Moreover, when the surface layer, the heating layer and the heat-isolated layer are stacked together by sawing, the air layers distributed between the layers are likely to be distributed unevenly such that uniformity of the thermal conductivity is affected and the temperature distribution of the electric-heating textile is also uneven.

SUMMARY OF THE INVENTION

[0008] The present invention provides an integrally-woven three-layer heating textile which is formed by an integral weaving method.

[0009] The present invention provides an integrally-woven three-layer heating textile including a heat-isolated fabric layer, a thermal function fabric layer, a plurality of conductive yarns and a plurality of connecting yams. The conductive yams are distributed between the heat-isolated fabric layer and the thermal function fabric layer. Furthermore, the connecting yams interlace the heat-isolated fabric layer and the thermal function fabric layer so that the conductive yarns are sandwiched between the heat-isolated fabric layer and the thermal function fabric layer.

[0010] According to an embodiment of the present invention, a total thickness of the heat-insulated fabric layer, the thermal function fabric layer and the connecting yarns is 3-20 millimeters.

[0011] According to an embodiment of the present invention, the thermal function fabric layer is a heat-isolated fabric layer.

[0012] According to an embodiment of the present invention, a coverage ratio of yarns in the heat-isolated fabric layer is 60%-80%.

[0013] According to an embodiment of the present invention, a characteristic heat-isolated value (Clo) of the heat-isolated fabric layer is 0.15-0.25.

[0014] According to an embodiment of the present invention, the thermal function fabric layer is a heating fabric layer.

[0015] According to an embodiment of the present invention, a coverage ratio of yarns in the heating fabric layer is 80%-100%.

[0016] According to an embodiment of the present invention, a characteristic heat-isolated value (Clo) of the heating fabric layer is 0.1-0.15.

[0017] In view of the aforementioned, the integrally-woven three-layer heating textile can be manufactured by an integral weaving method to achieve the purposes of reducing the manufacturing time and simplifying the process. In addition, the integrally-woven three-layer heating textile has advantages such as a thinner thickness and stability of thermal characteristics.

[0018] In order to make the aforementioned and other objects, features and advantages of the present invention more comprehensible, several embodiments accompanied with figures are described in detail below.

BRIEF DESCRIPTION OF THE DRAWINGS

[0019] The accompanying drawings are included to provide a further understanding of the invention, and are incorporated in and constitute a part of this specification. The drawings illustrate embodiments of the invention and, together with the description, serve to explain the principles of the invention.

[0020] FIG. **1** is a structure diagram of an integrally-woven three-layer heating textile according to the first embodiment of the present invention.

[0021] FIG. **2** is a structure diagram of an integrally-woven three-layer heating textile according to the second embodiment of the present invention.

DESCRIPTION OF EMBODIMENTS

[0022] FIG. **1** is a structure diagram of an integrally-woven three-layer heating textile according to the first embodiment of the present invention. Referring to FIG. **1**, an integrally-woven three-layer heating textile **100** includes a heat-isolated fabric layer **110**, a thermal function fabric layer **120**, a plurality of conductive yarns **130** and a plurality of connecting yarns **140**. The conductive yams **130** are distributed between the heat-isolated fabric layer **110** and the thermal function fabric layer **120**. Specifically, the heat-isolated fabric layer **110** and the thermal function fabric layer **120** as shown in FIG. **1** are arranged on an X axis of FIG. **1**, and a surface of the heat-isolated fabric layer **110** and a surface of the thermal function fabric layer **120** are perpendicular to a direction of the X axis. The surfaces of the heat-isolated fabric layer **110** and the thermal function fabric layer **120** (as shown by a

surface Y-Z in FIG. **1**) have a plurality of peaks respectively, e.g., peaks **110***a*, **110***b*, **110***c*, **120***a*, **120***b* and **120***c*. The conductive yams **130** are disposed between the heat-isolated fabric layer **110** and the thermal function fabric layer **120**.

[0023] According to the present embodiment, the three-layer structure of the integrally-woven three-layer heating textile **100** is integrally formed by shuttle weaving or knitting, in which one of the connecting yarns **140** interlaces sequentially the peaks **110***a*, **120***a*, **110***b*, **120***b*, **110***c* and **120***c* of the heat-isolated fabric layer **110** and the thermal function fabric layer **120**, and the conductive yarns **130** are sandwiched between the heat-isolated fabric layer **110** and the thermal function fabric layer **120**. Although only six peaks—the peaks **110***a*, **110***b*, **110***c*, **120***a*, **120***b* and **120***c*—are enumerated for illustration, people having ordinary skill in the art can infer the sequence in which the connecting yams **140** interlace the other peaks, and thus relevant description of the other peaks is not repeated herein. Through the interlacing method as described above, the heat-isolated fabric layer **110**, the thermal function fabric layer **120** and the conductive yams **130** are closely stacked together, and air existing among the heat-isolated fabric layer **110**, the thermal function fabric layer **120** and the conductive yams **130** is removed so as to enhance a thermal conductivity of the integrally-woven three-layer heating textile **100**.

[0024] Additionally, a total thickness of the connecting yams **140**, the heat-isolated fabric layer **110** and the thermal function fabric layer **120** is 3-20 millimeters, and the conductive yams **130** distributed between the heat-isolated fabric layer **110** and the thermal function fabric layer **120** are flexible metal fibers which are curved because of gravity, for example. When current passes through the conductive yarns **130**, heat is generated simultaneously. The heat generated by the conductive yarns **130** are transmitted through yams in the thermal function fabric layer **120**. In other words, the higher the coverage ratio of the yams in the thermal function fabric layer **120** is (a weaving density increasingly higher), the easier the heat is transmitted within a fabric structure of the thermal function fabric layer **120** such that a temperature of the thermal function fabric layer **120** rises. As a result, the thermal function fabric layer **120** has a heating function. From another aspect, the lower the coverage ratio of the yarns in the thermal function fabric layer **120** is (a weaving density increasingly lower), the more air is contained in the fabric structure of the thermal function fabric layer **120**. Since a thermal conductivity coefficient of air is smaller than a thermal conductivity coefficient of the yams in the thermal function fabric layer **120**, the air obstructs transmission of the heat within the fabric structure of the thermal function fabric layer **120**, and the temperature of the thermal function fabric layer **120** does not rise easily, thus achieving the purpose of heat-insulation.

[0025] The thermal function fabric layer **120** of the present embodiment is a heat-isolated fabric layer, and the coverage ratio of the yams in the thermal function fabric layer **120** is 60%-80%. According to another embodiment not shown herein, the thermal function fabric layer **120** is a heating fabric layer, and the coverage ratio of the thermal function fabric layer **120** is 80%-100%. Compared with another embodiment not shown herein, the yams in the thermal function fabric layer **120** of the present embodiment have a lower coverage ratio, and the fabric structure of the thermal function fabric layer **120** contains more air, which obstructs transmission of heat. Consequently, the thermal function fabric layer **120** of the present embodiment has a heat-isolated function, and a characteristic heat-isolated value(Clo) is 0.15-0.25. On the other hand, the thermal function fabric layer **120** of another embodiment not shown herein has a heating function, and a characteristic heat-isolated value(Clo) is 0.1-0.15.

[0026] FIG. **2** is a structure diagram of an integrally-woven three-layer heating textile according to the second embodiment of the present invention. The difference between the present embodiment and the first embodiment lies in that the integrally-woven three-layer heating textile **100** of the present embodiment has two connecting yams **141** and **142**. The connecting yam **141** interlaces sequentially the peaks **110***a*, **120***b* and **110***c* of the heat-isolated fabric layer **110** and the thermal function fabric layer **120**. The connecting yam **142** interlaces sequentially the peaks **120***a*, **110***b* and **120***c* of the heat-isolated fabric layer **110** and the thermal function fabric layer **120**. People having ordinary skill in the art can arrive at the interlacing sequence on their own in which the connecting yams **141** and **142** interlace the other peaks, and hence relevant description is not repeated herein.

[0027] In summary, the integrally-woven three-layer heating textile of the present invention is formed by integrally weaving the heat-isolated fabric layer, the thermal function fabric layer and the conductive yams. Simultaneously, the heat-isolated fabric layer, the thermal function fabric layer and the conductive yams are closely stacked together by the interlacing of the connecting yams. Compared with the conventional method of stacking the three layers by sawing or adhering, in the present invention, not only is one procedure reduced during the entire process, thus saving the manufacturing time and cost, the air existing between the layers during stacking is also removed so as to enhance the efficiency of thermal conductivity and the uniformity of temperature distribution. Moreover, the thermal function fabric layer achieves the effects of heat-insulation or heating through different coverage ratios of the yarns so as to enhance the usefulness and applicability of the present invention.

[0028] It will be apparent to those skilled in the art that various modifications and variations can be made to the structure of the present invention without departing from the scope or spirit of the invention. In view of the foregoing, it is intended that the present invention cover modifications and variations of this invention provided they fall within the scope of the following claims and their equivalents.

1. An integrally-woven three-layer heating textile, comprising:

a heat-isolating fabric layer;

a thermal function fabric layer;

a plurality of conductive yarns, distributed between the heat-isolating fabric layer and the thermal function fabric layer; and

a plurality of connecting yarns, interlacing the heat-isolating fabric layer and the thermal function fabric layer so that the conductive yarns are sandwiched between the heat-isolating fabric layer and the thermal function fabric layer.

2. The integrally-woven three-layer heating textile as claimed in claim **1**, wherein a total thickness of the heat-isolating fabric layer, the thermal function fabric layer and the connecting yarns is 3-20 millimeters.

3. The integrally-woven three-layer heating textile as claimed in claim **1**, wherein the thermal function fabric layer is a heat-isolated fabric layer.

4. The integrally-woven three-layer heating textile as claimed in claim **3**, wherein a coverage ratio of yarns in the heat-isolated fabric layer is 60%-80%.

5. The integrally-woven three-layer heating textile as claimed in claim **3**, wherein a characteristic heat-isolated value of the heat-isolated fabric layer is 0.15-0.25.

6. The integrally-woven three-layer heating textile as claimed in claim **1**, wherein the thermal function fabric layer is a heating fabric layer.

7. The integrally-woven three-layer heating textile as claimed in claim **6**, wherein a coverage ratio of yarns in the heating fabric layer is 80%-100%.

8. The integrally-woven three-layer heating textile as claimed in claim **6**, wherein a characteristic heat-isolated value of the heating fabric layer is 0.1-0.15.

* * * * *