(12) PATENT
(19) AUSTRALIAN PATENT OFFICE

(11) Application No. **AU 199714411 B2**
(10) Patent No. **712111**

(54) Title

Sports' shoe, in particular football boot

(51)[6] International Patent Classification(s)
A43B 005/02 A43B 005/00

(21) Application No: **199714411** (22) Application Date: **1997.01.13**

(87) WIPO No: **WO97/25889**

(30) Priority Data

(31) Number	(32) Date	(33) Country
19601219	1996.01.15	DE

(43) Publication Date : **1997.08.11**
(43) Publication Journal Date : **1997.10.02**
(44) Accepted Journal Date : **1999.10.28**

(71) Applicant(s)

Puma Aktiengesellschaft Rudolf Dassler Sport

(72) Inventor(s)

Rudolf Hieblinger

(74) Agent/Attorney

WATERMARK PATENT and TRADEMARK ATTORNEYS,Locked Bag 5,HAWTHORN VIC 3122

OPI DATE 11/08/97 APPLN. ID 14411/97
AOJP DATE 02/10/97 PCT NUMBER PCT/EP97/00122
AU9714411

(51) Internationale Patentklassifikation 6 : A43B 5/02, 5/00

A1

(11) Internationale Veröffentlichungsnummer: WO 97/25889

(43) Internationales Veröffentlichungsdatum: 24. Juli 1997 (24.07.97)

(21) Internationales Aktenzeichen: PCT/EP97/00122

(22) Internationales Anmeldedatum: 13. Januar 1997 (13.01.97)

(30) Prioritätsdaten:
196 01 219.8 15. Januar 1996 (15.01.96) DE

(~~71~~)(72) ~~Anmelder und~~ Erfinder: HIEBLINGER, Rudolf [DE/DE]; Münchner Strasse 14, D-85774 München (DE).

(74) Anwälte: POPP, Eugen usw.; Meissner, Bolte & Partner, Postfach 86 05 24, D-81633 München (DE).

(81) Bestimmungsstaaten: AU, CZ, JP, PL, RU, SK, UA, US, europäisches Patent (AT, BE, CH, DE, DK, ES, FI, FR, GB, GR, IE, IT, LU, MC, NL, PT, SE).

Veröffentlicht
Mit internationalem Recherchenbericht.

sel 10/10 4

(71) PUMA AKTIENGESELLSCHAFT
RUDOLF DASSLER SPORT
Wurzburger Strasse 13
D-91074 Herzogenaurach
Germany

AUSTRALIAN 92815 21/1/98 PATENT OFFICE

(54) Title: SPORTS' SHOE, IN PARTICULAR FOOTBALL BOOT

(54) Bezeichnung: SPORTSCHUH, INSBESONDERE FUSSBALLSCHUH

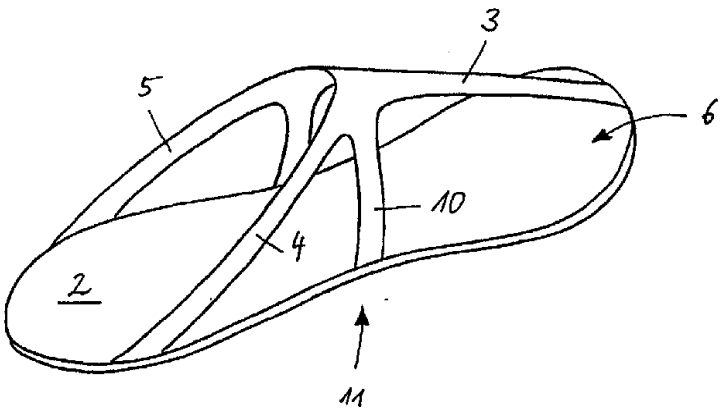

(57) Abstract

The invention relates to a sports' shoe, in particular a football boot, with an upper (1) comprising an instep region (8), with a sole (2) connected to the upper and with tension strips (3, 4, 5) for stiffening. The sole is stiffened by a front tension strip (3) connecting the front end (6) of the sole to the upper (1) and by two rear tension strips (4, 5) connecting the heel area (7) of the sole (2) to the upper (1) in such a manner that although it is still possible to bend the sole up completely, it is impossible to bend it down.

(57) Zusammenfassung

Die Erfindung betrifft einen Sportschuh, insbesondere Fußballschuh mit einem Schaft (1), der einen Ristbereich (8) umfaßt, einer mit dem Schaft verbundenen Sohle (2) und Zugbändern (3, 4, 5) zur Versteifung. Durch ein vorderes Zugband (3), welches das vordere Sohlenende (6) mit dem Schaft (1) verbindet, und durch zwei hintere Zugbänder (4, 5), welche den Fersenbereich (7) der Sohle (2) mit dem Schaft (1) verbinden, wird eine Versteifung der Sohle (2) bewirkt, derart, daß ein Durchbiegen der Sohle nach oben weiterhin uneingeschränkt möglich ist, ein Durchbiegen derselben nach unten jedoch wirksam verhindert wird.

LEDIGLICH ZUR INFORMATION

Codes zur Identifizierung von PCT-Vertragsstaaten auf den Kopfbögen der Schriften, die internationale Anmeldungen gemäss dem PCT veröffentlichen.

AM	Armenien	**GB**	Vereinigtes Königreich	**MX**	Mexiko
AT	Österreich	**GE**	Georgien	**NE**	Niger
AU	Australien	**GN**	Guinea	**NL**	Niederlande
BB	Barbados	**GR**	Griechenland	**NO**	Norwegen
BE	Belgien	**HU**	Ungarn	**NZ**	Neuseeland
BF	Burkina Faso	**IE**	Irland	**PL**	Polen
BG	Bulgarien	**IT**	Italien	**PT**	Portugal
BJ	Benin	**JP**	Japan	**RO**	Rumänien
BR	Brasilien	**KE**	Kenya	**RU**	Russische Föderation
BY	Belarus	**KG**	Kirgisistan	**SD**	Sudan
CA	Kanada	**KP**	Demokratische Volksrepublik Korea	**SE**	Schweden
CF	Zentrale Afrikanische Republik	**KR**	Republik Korea	**SG**	Singapur
CG	Kongo	**KZ**	Kasachstan	**SI**	Slowenien
CH	Schweiz	**LI**	Liechtenstein	**SK**	Slowakei
CI	Côte d'Ivoire	**LK**	Sri Lanka	**SN**	Senegal
CM	Kamerun	**LR**	Liberia	**SZ**	Swasiland
CN	China	**LK**	Litauen	**TD**	Tschad
CS	Tschechoslowakei	**LU**	Luxemburg	**TG**	Togo
CZ	Tschechische Republik	**LV**	Lettland	**TJ**	Tadschikistan
DE	Deutschland	**MC**	Monaco	**TT**	Trinidad und Tobago
DK	Dänemark	**MD**	Republik Moldau	**UA**	Ukraine
EE	Estland	**MG**	Madagaskar	**UG**	Uganda
ES	Spanien	**ML**	Mali	**US**	Vereinigte Staaten von Amerika
FI	Finnland	**MN**	Mongolei	**UZ**	Usbekistan
FR	Frankreich	**MR**	Mauretanien	**VN**	Vietnam
GA	Gabon	**MW**	Malawi		

Docket No. 0120-157

Abstract

The invention relates to a sports' shoe, in particular a football boot, with an upper (1) comprising an instep region (8), with a sole (2) connected to the upper and with tension strips (3, 4, 5) for stiffening. The sole is stiffened by a front tension strip (3) connecting the front end (6) of the sole to the upper (1) and by two rear tension strips (4, 5) connecting the heel area (7) of the sole (2) to the upper (1) in such a manner that although it is still possible to bend the sole up completely, it is impossible to bend it down.

AUSTRALIAN PATENT OFFICE

Docket No. 0120-157

WO 97/25889

PCT/EP97/00122

Athletic shoe, especially soccer shoe

Specification

The invention relates to an athletic shoe, especially a soccer shoe with an upper which includes the instep area, a sole joined to the upper, and tension bands for stiffening.

This athletic shoe is known for example from DE 27 52 301 A1. The tension bands described there are designed to ensure more direct transfer of force between the foot and the shoe sole and thus to reduce fatigue phenomena on the upper itself. Moreover the traction of the foot in the shoe will be improved by the aforementioned tension bands.

One problem in athletic shoes, especially soccer shoes, is that the sole must have high flexibility to prevent hindering the natural rolling process of the foot when running. The energies which must be expended during running to deform the sole can be minimized when a sole as flexible as possible is used,

On the other hand, an overly light and flexible sole often entails an major injury risk. Bending of the sole against its natural arch downward can occur for example when running when the foot is placed on an uneven surface, for example, a stone.

In soccer shoes it is especially disadvantageous if the sole is allowed to bend downward. Soccer shoes must be light and very flexible. They should have especially thin soles which do not hinder the rolling motion of the foot when running. The upper should also consist of very thin soft leather which conforms closely to the foot to ensure better feeling of the ball.

When taking a shot, especially with the instep, in which the ball is hit with the extended foot, it holds that bending of the sole downward should be prevented as much as possible and the foot should accordingly be supported inflexibly. This is because the impact force and ball speed are reduced when the sole and accordingly the foot yield downward, by which a large amount of the impact force is lost. Satisfactory transfer of momentum cannot be achieved with a sole which yields downward.

AUSTRALIAN PATENT OFFICE

To solve this problem in a soccer shoe it is proposed in DE 32 19 652 A1 that on the bottom of a sole formed from inherently soft base material there be material parts with greater hardness which are provided with stops and counterstops. Bending of the sole downward is prevented by the stops and counterstops of the material parts located on the bottom of the sole coming into contact. This known design results in a relatively complex sole structure. In addition it no longer takes effect to the desired degree in heavy, muddy ground. The gap between the stop and counterstop fills with soil or the like so that the sole arches accordingly upward with increasing duration of play. The interplay of the stop and counterstop is lost.

The object of the invention is to devise an athletic shoe, especially a soccer shoe, in which bending of the sole downward is for the most part prevented, but without limiting the flexibility of the sole necessary for the rolling process, regardless of the subsoil on which the shoe is being used.

According to the invention there is provided an athletic shoe, in particular a football shoe, having:

an upper including an instep region;

a sole attached to the upper and having front and rear end regions;

at least one front tension band connecting the front region of the sole and the upper; and

at least two rear tension bands connecting the rear region of the sole and the upper, wherein the at least one front tension band and the at least two rear tension bands are interconnected in the instep region of the upper to form a support structure so that in use of the shoe downward bending of the sole is resisted by the tension bands.

Preferably the shoe further includes either a tensioning cable closure or lacing in the instep region of the upper arranged to enable said front and rear tension bands to be tensioned against each other.

The shoe may further include a support element running generally transversely to a longitudinal direction of the shoe and having two ends, each said end being attached to a middle region of the sole between the front and rear regions, with said support element extending over the instep region of the upper.

Preferably, said support element is interconnected with said front and rear tension bands.

When lacing is used, the instep region of the upper may include two reinforced eyelet strips for said lacing, said eyelet strips delimiting a slot therebetween, and being connected to said at least one front tension band, with each eyelet strip being connected to at least one of said rear tension bands. In this case, a support element may be provided running generally transversely to a longitudinal direction of the shoe and including two

AUSTRALIAN PATENT OFFICE

parts, each said part having a first end attached to a middle region of the sole and a second end attached to one of said eyelet strips.

Where included, a said support element may be manufactured from a polyamide or polyethylene strip.

Where included, a said support element and said tension bands may be of the same construction and material as the tension bands and the support element may be attached to or integrated with the upper.

Preferably, the tension bands are substantially inextensible.

The tension bands may include aramid fibres, preferably Kevlar, or carbon fibres.

The tension bands may be interwoven with a material adapted for use in the upper thereby to take the form of flat strips. Then, said strips may be stitched into or onto the upper.

At least one of said tension bands may be formed at least partially by sections of the upper.

The shoe may further include a toe cap attached to the front region of the sole and to which said at least one front tension band is attached, so that attachment of said at least one front tension band to the sole is indirect.

The shoe may further include a heel upper cap attached to the rear region of the sole and to which two said rear tension bands are attached, so that attachment of said two rear tension bands to the sole is indirect.

Means may be provided in the instep region for tensioning individual ones of said tension bands.

The shoe may have two said front tension bands.

The key idea of the invention is to provide tension bands which extend from the front and rear ends of the sole running obliquely upwards towards one another towards the instep region of the upper and which are interconnected especially there in a supporting structure.

Note that the terms "instep area" and "instep region" are used interchangeably in this specification.

This arrangement of tension bands stiffens the sole as easily as possible against bending downward. The stiffening action is increased by the foot itself which is in the shoe, since the front and the two back tension bands are supported at their connection point on the instep of the foot. This effectively counteracts the deflection of the sole downward and the corresponding deformation of the upper.

Preferably the front and the two back tension bands are tensioned against one another by lacing located especially in the instep area of the upper or by a tensioning cable closure. When the laces are undone or the tensioning cable closure is opened it is easy to

AUSTRALIAN PATENT OFFICE

put the shoe on or take it off. The lacing or tensioning cable closure allows the tension bands to be prestressed such that the sole undergoes the desired stiffening effect. By means of the variable adjustment possibilities of the lacing or tensioning cable closure not only is matching to different foot shapes possible, but the desired prestress of the tension bands can also be adjusted. This applies especially when

AUSTRALIAN PATENT OFFICE

separate tension means are assigned to the tension bands in the instep area, i.e. tension means which are independent of conventional lacing, etc.

Furthermore, it is advantageous if there is a support element which runs essentially transversely to the longitudinal extension of the shoe and which engages both its ends in the middle area of the sole and extends over the instep area of the shaft.

This support element causes further stiffening of the sole. It complements and expands the above described support by the front and back tension bands. The overall arrangement of front and back tension bands, the support element and sole yields a self-supporting support structure which prevents bending downward, without adversely affect flexibility upward. The foot itself is no longer necessary for stiffening. In this way the mobility of the foot is promoted in the normal rolling process. The foot can be held in the shoe under less stress. This applies especially when the support element is joined to the front and two back tension bands in the instep area in the manner of a knot. The upper then has essentially only the function of "clothing" the foot.

Preferably the tension bands consist of aramid fibers, especially Kevlar or carbon fibers. These fibers have extremely limited extensibility and at the same time have extremely high tensile strength.

The support element can be produced from relatively stiff PE, PA or similar plastic strip. In an especially soft embodiment the support element is produced from the same material and in the same way as the tension bands and is attached to the upper or integrated thereon.

When the tension bands are interwoven with leather or similar upper materials, flat strips can be formed which conform especially well to the upper of the shoe.

It is especially advantageous in this case to sew the tension bands onto or into the upper. This eliminates friction sites between the tension bands and the upper. Finally, tension bands sewn on the outside can impart a pleasing appearance to an athletic shoe, especially a soccer shoe.

The invention is detailed below also with respect to other features and advantages using the description of one embodiment and with reference to the attached drawings.

Here

AUSTRALIAN PATENT OFFICE

Figure 1 shows a schematic of an athletic shoe according to one embodiment of the invention;

Figure 2 shows a side view of an athletic shoe according to the schematic as shown in Figure 1; and

Figure 3 shows a three-dimensional sketch of the arrangement of the tension bands and the support element according to the embodiment shown in Figure 2.

Figure 1 shows a sketch of a soccer shoe. The soccer shoe consists of upper 1 and sole 2. Upper 1 and sole 2 are joined to one another using one of the conventional techniques, for example, sewn and/or bonded or cemented. On the bottom of sole 2 there are conventionally nubs 14 which are used for better traction on soft ground such as turf, etc. From front sole end 6 there extends front tension band 3 running obliquely upward to instep region 8 of upper 1. Two back tension bands 4 and 5 extend from heel area 7 of the sole into instep area 8 and are joined there to front tension band 3 directly or indirectly, for example via eyelet strip 13 (see Figure 2). Back tension band 4 runs on one side of upper 1 from the instep to the ankle. On the opposite side of the upper other tension band 5 is positioned accordingly (compare Figure 3).

To increase the stiffness and make available a self-supporting arrangement, there can furthermore be band-like support element 10 which runs essentially transversely to the longitudinal extension of the shoe and engages its two ends in middle area 11 of sole 2. In doing so it extends over instep area 8 of upper 1 so that the arc formed by support element 10 does not hinder the foot held in the shoe.

The arrangement of tension bands and the support element shown in Figure 1 effectively prevents bending of sole 2 downward. This applies especially when the shoe is put on, since then additional support of the tensions bands on the instep takes place, in the embodiment shown via eyelet strip 13. The force exerted in a soccer shoe in an instep shot on forward area 6 of sole 2 is absorbed via front tension band 3 by rear tension bands 4, 5 and support element 10. In this way bending of the sole downward is for the most part prevented. The foot is supported accordingly. In a hiking shoe with a support structure of the described type, pressing of middle area 11 of sole 2 inward for example when stepping on a rock, root or similar barrier is prevented by support element 10 being supported against tensioned front 3 and back tension bands 4, 5.

AUSTRALIAN PATENT OFFICE

The described shoe structure is of course also suited for track and field, bicycling, basketball or similar athletic shoes.

Figure 2 shows a soccer shoe as shown in the sketch in Figure 1 in a side view. Front tension band 3 and rear tension bands 4, 5 consist of aramid fibers, especially Kevlar or carbon fibers. In this way the tension bands have high tensile strength and in addition stretch very little. The strip-shaped configuration of the tension bands shown in Figure 2 is formed by their being interwoven with leather or similar upper material. Furthermore, tension bands 3, 4, 5 are sewn onto upper 1; this imparts a pleasing appearance to the shoe overall.

Tension bands 3, 4, 5 in the embodiment as shown in Figure 2 are not connected directly to one another, but via two eyelet strips 13. Eyelet strips 13 are reinforced relative to the upper material such that they have high tensile strength and at the same time stretch very little. Two eyelet strips 13 border lace slot 12 formed in instep area 8 of upper 1.

Front tension band 3 is attached to two eyelet strips 13 on their front, lower end. Two eyelet strips 13 could be equally well connected forward to one another and the front tension band could be attached in the area of this connection. Two rear tension bands 4, 5 are likewise attached to two eyelet strips 13.

Support element 10 can run either without direct attachment to eyelet strips 13 under them and extend continuously over the instep area of upper 1; alternatively support element 10 is divided into a first and a second section. The first and second section then extend from middle area 11 of sole 2 to eyelet strip 13 assigned at the time and are attached thereto.

Attachment of tension bands 3, 4, 5 and the described support element sections to eyelet strips 13 can be done using conventional technology, for example by cementing, sewing, riveting, bonding, etc. The same applies to the connection to sole 2.

The sketch as in Figure 3 schematically shows the basic structure consisting of tension bands 3, 4, 5 and support element 10 for stiffening of sole 2 downward. Of course the figure is purely schematic, since to fit the foot there is the knot on which the tension bands and support element run together divided lengthwise with formation of a lace slot. Thus the instep opening of the shoe defined on the one hand by support element 10 and by sole 2 on the other can be changed and matched individually to the foot of the user. In this way the support of sole 2 can also be adjusted upward.

AUSTRALIAN PATENT OFFICE

Of course, within the framework of the invention there can be other tension bands and support elements or their arrangement can be modified. The described basic structure should however be preserved in all cases. For example, an arrangement of two front tension bands which run in a roughly V-shape to the front or parallel to one another is conceivable.

Likewise it is possible to replace one or more tension bands 3, 4, 5 entirely or partially by relatively low-stretch materials or upper sections which have the same action, which absorb tension, and which are preferably an integral part of upper 1. In the shoe shown in Figure 2, over ankle region 7 of sole 2 ankle upper cap 15 is formed which is connected to ankle region 7 of sole 2. Tension bands 4, 5 can be attached equally well to ankle upper cap 15 instead of to sole 2 when ankle shank cap 15 is made appropriately strong or stiff.

Accordingly a toe cap can also be formed to which the front end of the front tension band is then attached.

AUSTRALIAN PATENT OFFICE

THE CLAIMS DEFINING THE INVENTION ARE AS FOLLOWS:

1. An athletic shoe, in particular a football shoe, having:

an upper including an instep region;

a sole attached to the upper and having front and rear end regions;

at least one front tension band connecting the front region of the sole and the upper; and

at least two rear tension bands connecting the rear region of the sole and the upper,

wherein the at least one front tension band and the at least two rear tension bands are interconnected in the instep region of the upper to form a support structure so that in use of the shoe downward bending of the sole is resisted by the tension bands.

2. An athletic shoe according to claim 1 further including a tensioning cable closure in the instep region of the upper arranged to enable said front and rear tension bands to be tensioned against each other.

3. An athletic shoe according to claim 1 further including lacing in the instep region of the upper arranged to enable said front and rear tension bands to be tensioned against each other.

4. An athletic shoe according to claim 3 wherein the instep region of the upper includes two reinforced eyelet strips for said lacing, wherein said eyelet strips delimit a slot therebetween, wherein the eyelet strips are connected to said at least one front tension band, and wherein each eyelet strip is connected to at least one of said rear tension bands.

5. An athletic shoe according to any one of claims 1 to 4 further including a support element running generally transversely to a longitudinal direction of the shoe and having two ends, each said end being attached to a middle region of the sole between the front and rear regions, wherein said support element extends over the instep region of the upper.

AUSTRALIAN PATENT OFFICE

6. An athletic shoe according to claim 5 wherein said support element is interconnected with said front and rear tension bands.

7. An athletic shoe according to claim 4 further including a support element running generally transversely to a longitudinal direction of the shoe wherein the support element includes two parts, each said part having a first end attached to a middle region of the sole and a second end attached to one of said eyelet strips.

8. An athletic shoe according to any one of claims 5 to 7 wherein said support element is manufactured from a polyamide or polyethylene strip.

9. An athletic shoe according to any one of claims 5 to 7 wherein said support element and said tension bands are of the same construction and material as the tension bands and wherein the support element is attached to or integrated with the upper.

10. An athletic shoe according to any one of claims 1 to 9 wherein said tension bands are substantially inextensible.

11. An athletic shoe according to any one of claims 1 to 10 wherein said tension bands include aramid fibres, preferably Kevlar, or carbon fibres.

12. An athletic shoe according to any one of claims 1 to 11 wherein said tension bands are interwoven with a material adapted for use in the upper thereby to take the form of flat strips.

13. An athletic shoe according to claim 12 wherein said strips are stitched into or onto the upper.

AUSTRALIAN PATENT OFFICE

14. An athletic shoe according to any one of claims 1 to 13 wherein at least one of said tension bands is formed at least partially by sections of the upper.

15. An athletic shoe according to any one of claims 1 to 14 further including a toe cap attached to the front region of the sole and to which said at least one front tension band is attached, so that attachment of said at least one front tension band to the sole is indirect.

16. An athletic shoe according to any one of claims 1 to 15 further including a heel upper cap attached to the rear region of the sole and to which two said rear tension bands are attached, so that attachment of said two rear tension bands to the sole is indirect.

17. An athletic shoe according to any one of claims 1 to 16 wherein means are provided in the instep region for tensioning individual ones of said tension bands.

18. An athletic shoe according to any one of claims 1 to 17 having two said front tension bands.

DATED this 25th day of August 1999
PUMA AKTIENGESELLSCHAFT RUDOLF DASSLER SPORT

WATERMARK PATENT & TRADEMARK ATTORNEYS
290 BURWOOD ROAD
HAWTHORN VICTORIA 3122
AUSTRALIA

CJH:SKP:DHS:MMC DOC 28 AU1441197.WPC

AUSTRALIAN PATENT OFFICE

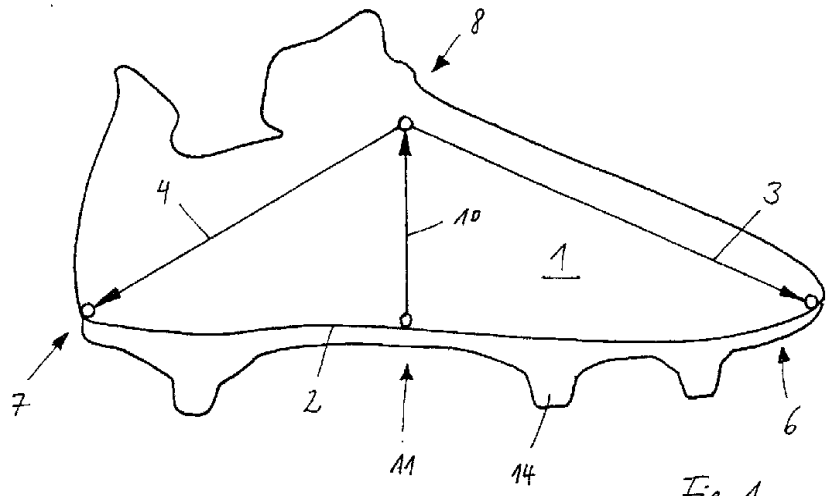

Fig. 1

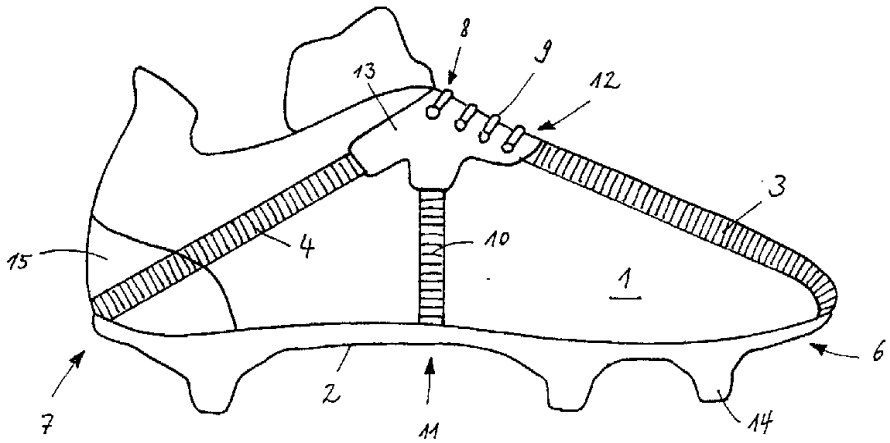

Fig. 2

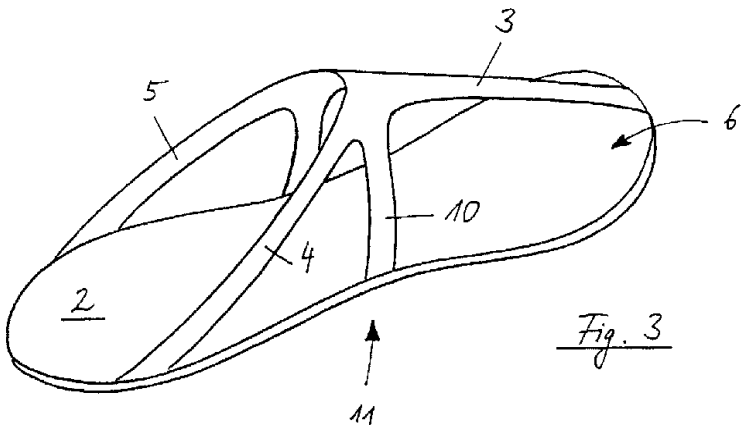

Fig. 3