United States Patent

Koch

[15] **3,643,364**

[45] **Feb. 22, 1972**

[54] **RIFLED GUN BARREL WITH THE INTERIOR CROSS-SECTIONAL CONFIGURATION DEFINING A REGULAR CURVILINEAR POLYGON**

[72] Inventor: **Theodor Koch,** 7238 Oberndorf, (Neckar), Lehenhofweg 29, Germany

[22] Filed: **Nov. 7, 1969**

[21] Appl. No.: **871,624**

Related U.S. Application Data

[63] Continuation of Ser. No. 670,654, Sept. 26, 1967, abandoned.

[52] **U.S. Cl.** **42/78**
[51] **Int. Cl.** **F41c 21/00**
[58] **Field of Search** 42/78

[56] **References Cited**

UNITED STATES PATENTS

9,830	7/1853	Lancaster	42/78
1,275,028	8/1918	Holter	42/78
1,335,444	3/1920	Lashley	42/78

FOREIGN PATENTS OR APPLICATIONS

257	1/1864	Great Britain	42/78
3,068	12/1860	Great Britain	42/78
3,166	12/1861	Great Britain	42/78

Primary Examiner—Samuel Feinberg
Assistant Examiner—C. T. Jordan

[57] **ABSTRACT**

A rifled barrel intended for use with small arms, particularly in combination with steel-jacketed soft-core ammunition having no special rotating bands provided on the exterior thereof, which barrel has a cross-sectional configuration such that the interior surface of the barrel defines a regular polygon with rounded sides and corners, which corners form the rifling in the barrel wall and represent arc segments spaced uniformly about the interior surface and having a common radius of curvature, the rounded sides of the polygon extending between the rounded corners and representing arc segments having a common radius of curvature of lesser magnitude than the first-mentioned radius of curvature, the transitional regions between adjacent arc segments having different radii of curvature being continuous.

9 Claims, 1 Drawing Figure

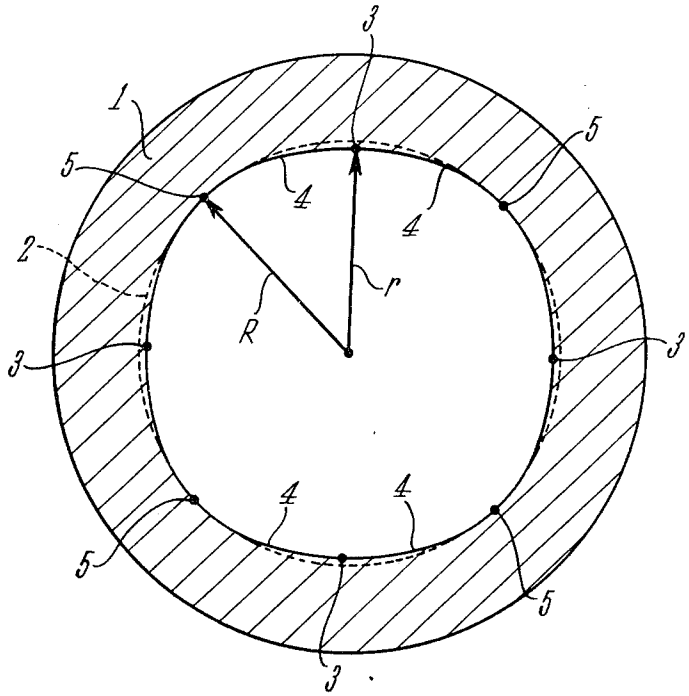

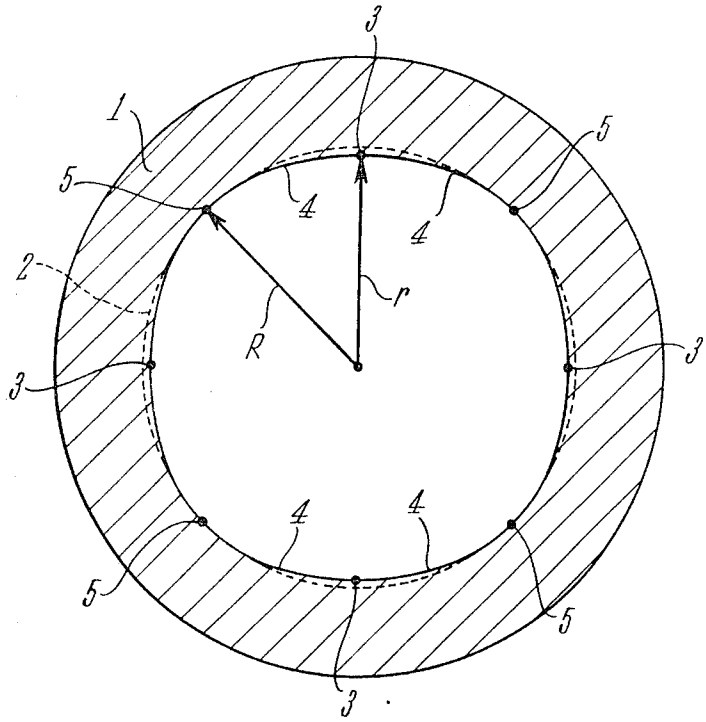

INVENTOR
THEODOR KOCH

BY Craig & Antonelli
ATTORNEYS

RIFLED GUN BARREL WITH THE INTERIOR CROSS-SECTIONAL CONFIGURATION DEFINING A REGULAR CURVILINEAR POLYGON

This is a continuation of Ser. No. 670,654 filed Sept. 26, 1967, now abandoned.

The invention relates to a rifled barrel intended and suitable in particular for small arms using as ammunition bullets without any special rotating bands.

In conventional rifled barrels the inside of the barrel is provided with internally projecting lands equally spaced along its circumference, said lands forming part of an extended spiral twist about the longitudinal axis of the barrel. The rifles of known construction have their barrels provided with a plurality of such lands, the clearance between said lands being less than the diameter of the bullet, thus causing the lands to dig into the material of the bullet and producing a kind of tracks in the jacket of the bullet in which the bullet seats against the lands, a rotary motion being imparted to it by the twist of said lands.

In order to fully utilize the impact of the gunpowder gases on the bullet it is desirable that the bullet perfectly fit the cross section of the barrel and that no gunpowder gases can escape from the barrel past the bullet. However, detailed investigations have shown that the lands will not dig into the jacket of the bullet to an extent where the jacket of the bullet would make full contact with the wall of the barrel in the area of the grooves.

Conditions are particularly unfavorable in the aft portion of the barrel where the material of the barrel is exposed to the high gas pressure and the greater heat. Expansion measurements and calculations have revealed that the gas pressure may produce an enlargement of about 0.03 to 0.04 mm. and that an enlargement of the same order may result from the heat. This enlargement grows in size as the load increases with the rate of fire. Owing to the overall enlargement of the barrel it may happen that in the initial portion of the barrel the bullet, rather than following the twist of the grooves, skips the grooves, being caught by them only after reaching the forward portion of the barrel where the heat is less intense and the gas pressure is lower. However, even in that portion of the barrel the lands will not fully cut into the jacket of the bullet and the bullet will not seal the barrel completely. At best, the jacket of the bullet seats against the wall of the barrel in the forward portion of the barrel in the middle of each groove, leaving hollow spaces of roughly comma-shaped cross section on either side of the point of contact, which still permit the gunpowder gases to escape.

The conditions just described, apart from causing a reduction in the speed of the bullet on account of the poor seal which it makes in the barrel as compared with the maximum speed that can be obtained and a reduced accuracy of fire on account of the late seating of the bullet, also result in a much higher wear of the barrel. The hot gunpowder gases escaping through the narrow gap between the bullet and the wall of the barrel transfer an increased amount of their heat to the barrel, thus causing the wall of the barrel to be prematurely damaged.

The conditions discussed occur in a particularly high degree with tombac-clad steel-jacketed bullets with a soft core, as the soft core of such bullets is unable to produce the counterpressure that would be required to make the lands cut into the steel jacket and instead yields to this pressure so that the bullet is deformed as a whole without an optimum seal of the barrel and an optimum seating of the bullet being accomplished.

It is the object of this invention to avoid these disadvantages of conventional rifled barrels. According to the invention this object is achieved by an arrangement in which the concave surfaces of the lands along the circumference of the bore of the barrel—concave as viewed from the axis of the barrel—blend into the areas forming the grooves in a continuous line without any point of inflection so that the cross section of the barrel essentially takes the form of a polygon with rounded corners and sides. This means that according to the invention the cross section of the barrel is given approximately that shape which a tombac-clad steel-jacketed bullet with a soft core takes in a conventional rifled barrel under the pressure of the lands acting on the jacket of the bullet. This ensures that the bullet completely fills the barrel right from the start so that maximum advantage is taken of the action of the gunpowder gases while an increased wear of the barrel from gases escaping between the bullet and the wall of the barrel is precluded. In addition, the bullet is properly seated over the full length of the barrel, a fact, which also favorably influences the firing efficiency. At the same time, the deformation energy required to make the cross section of the bullet fit the cross section of the barrel is far less than the energy that would be required to completely fill the grooves and lands of conventionally shaped barrels, which is, for instance, possible with a hard-core bullet, because the chosen form of the barrel cross section corresponds to the natural deformation of the bullet when exposed to the same radial pressures at a plurality of points equally spaced along its circumference. By a proper choice of the smallest and greatest radii of the barrel and the form of the transitions between these radii it can be ensured that the cross section of the barrel has the same area as the circular cross section of the undeformed bullet so that the bullet definitely fills the barrel completely.

In a preferred embodiment of the invention the cross section of the barrel has the form of a circle flattened at four points spaced 90° apart from each other, thus corresponding to the widely used conventional barrels with four grooves.

The accompanying drawing shows a cross section through a barrel according to the invention. It will be noted, that the cross section through the interior of the barrel **1** deviates only slightly from the form of a circle inasmuch as the circle **2**, represented by the dash line and having the radius R, is flattened at the four points **3** offset 90° against each other. Consequently, the distance *r* of the cross section of the barrel is slightly smaller at these points than the radius R of the circle **2**. At the same time, the distance *r* is smaller than the radius of a corresponding bullet, while the distance R is greater than the radius of the bullet. The transitions **4** between the points **3** where the distance of the barrel from the center of the circle is *r* and the points **5** with the distance R from the center of circle **2** is such that the cross section of the barrel has essentially the same area as the cross section of the corresponding bullet. It will further be noted that from the areas adjacent to the points **3**, which correspond to the lands of conventional barrels, the contour of the cross section of the barrel blends in a continuous line without any point of inflection into the areas forming the grooves, which are located adjacent to the points **5**. It is obvious that without any great expenditure of energy a bullet can be brought into the shape of the cross section of the barrel so as to completely fill said cross section while a proper seating is achieved in addition. This means that with a given gunpowder charge the muzzle energy of the bullet is increased, the seating is improved, and, finally the wear of the barrel is reduced. As the barrel according to the invention in its interior has no edges extending along its longitudinal axis it is much better suited for the application of a protective coating such as chrome than the known barrels with conventional profiles.

In the same manner as the rifled barrels of known construction, barrels according to this invention can be manufactured with the aid of a drift punch having a cross section which corresponds to the internal cross section of the barrel. Naturally, the invention is not restricted to the type of cross section shown in the accompanying drawing and, in particular, includes forms in which the number of grooves differs from the four grooves of the embodiment shown by way of example.

Having thus fully described our invention, what we claim as new and desire to secure by Letters Patent is:

1. In a gun, a rifled barrel having a cross sectional configuration such that the interior surface of the barrel defines a regular curvilinear polygon with rounded sides and rounded corners, said rounded corners being uniformly spaced about said interior surface and being formed by first arcuately shaped segments, each of which has radii of curvature smaller than the distance of the corresponding point of the surface of such

segment from the longitudinal axis of the barrel, said rounded sides extending between said rounded corners and being formed by second arcuately shaped segments, each of which has radii of curvature greater than said first mentioned radii of curvature and greater than the distance of the corresponding point of the surface of such segment from the longitudinal axis of the barrel, and the transitions between adjacent arcuately shaped segments being continuous substantially without any point of inflection and being formed by curved surfaces of substantially continuously changing radii of curvature, and projectiles for use in said gun, said projectile being of the jacketed core type and having a substantially round cross section and being devoid of rotating bands on the exterior surface thereof, whereby the cross section assumed by each **18** projectile as it passes through said barrel, conforms closely to that of said barrel as said projectile is subjected to radial pressures at a number of points on the exterior surface thereof corresponding to the number and spacing of said rounded sides of said cross section of said barrel.

2. The combination according to claim **1**, wherein said cross section of said barrel defines a circle flattened at four points angularly spaced apart at intervals of about 90°.

3. The combination according to claim **1**, characterized in that the rounded sides and rounded corners alternate with one another.

4. The combination according to claim **1**, characterized in that the arcuately shaped segment pass over into one another in a continuous line substantially devoid of angles and points of inflections constituted by abrupt and relatively large changes in the radii of curvature thereof.

5. The combination according to claim **1**, characterized in that the cross sectional area of polygonal configuration of the barrel is substantially equal to the circular cross section of the projectile to be used.

6. In a breech-loaded gun using projectiles of the jacketed core type with a substantially round cross section and devoid of rotating bands on the exterior surface thereof, the improvement comprising a rifled barrel having a cross-sectional configuration such that the interior surface of the barrel defines a regular curvilinear polygon with rounded sides and rounded corners, said rounded corners being uniformly spaced about said interior surface and being formed by first arcuately shaped segments, each of which has radii of curvature smaller than the distance of the corresponding point of the surface of such segment from the longitudinal axis of the barrel, said rounded sides extending between said rounded corners and being formed by second arcuately shaped segments, each of which has radii of curvature greater than said first mentioned radii of curvature and greater than the distance of the corresponding point of the surface of such segment from the longitudinal axis of the barrel, and the transitions between adjacent arcuately shaped segments being continuous substantially without any point of inflection and being formed by curved surfaces of substantially continuously changing radii of curvature, whereby the cross section assumed by each projectile as it passes through said barrel, conforms closely to that of said barrel as said projectile is subjected to radial pressures at a number of points on the exterior surface thereof corresponding to the number and spacing of said rounded sides of said cross section of said barrel.

7. The combination according to claim **6**, characterized in that the rounded sides and rounded corners alternate with one another.

8. The combination according to claim **6**, characterized in that the arcuately shaped segments pass over into one another in a continuous line substantially devoid of angles and points of inflections constituted by abrupt and relatively large changes in the radii of curvature thereof.

9. The combination according to claim **6**, characterized in that the cross sectional area of polygonal configuration of the barrel is substantially equal to the circular cross section of the projectile to be used.

* * * * *