Sept. 24, 1935. I. MORIOKA 2,015,457

PROCESS FOR MANUFACTURING A RELIEF BY THE AID OF PHOTOGRAPHY

Filed Feb. 20, 1933 2 Sheets-Sheet 1

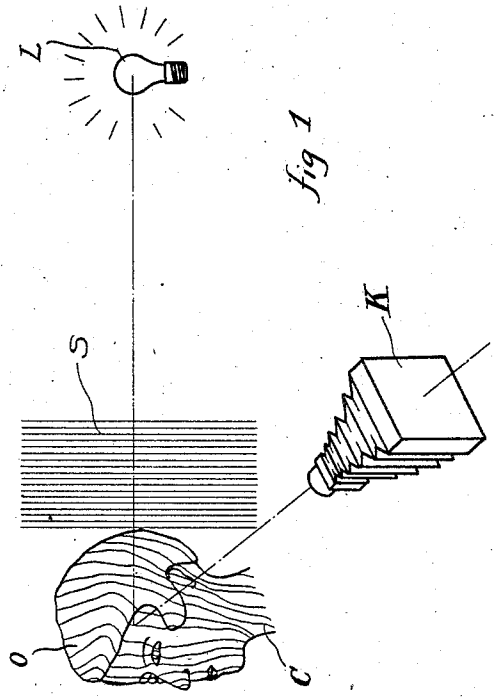

fig 1

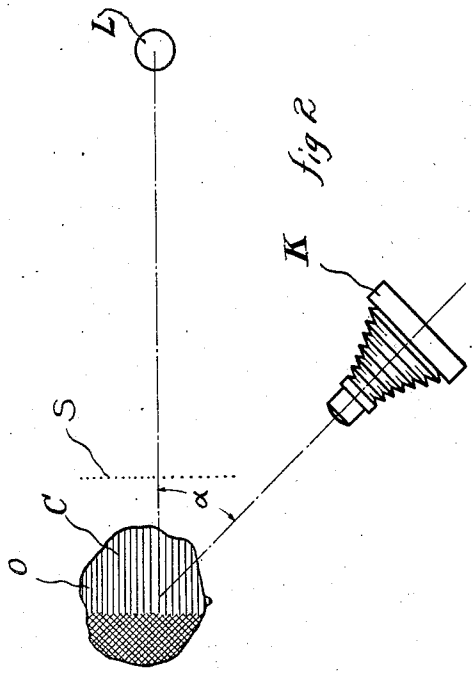

fig 2

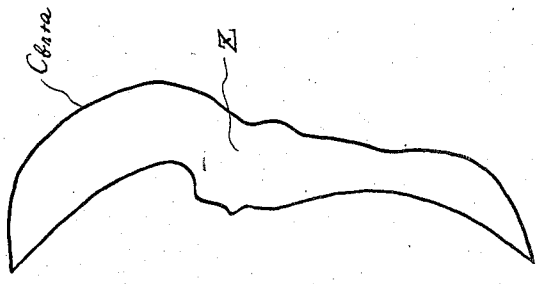

fig 5

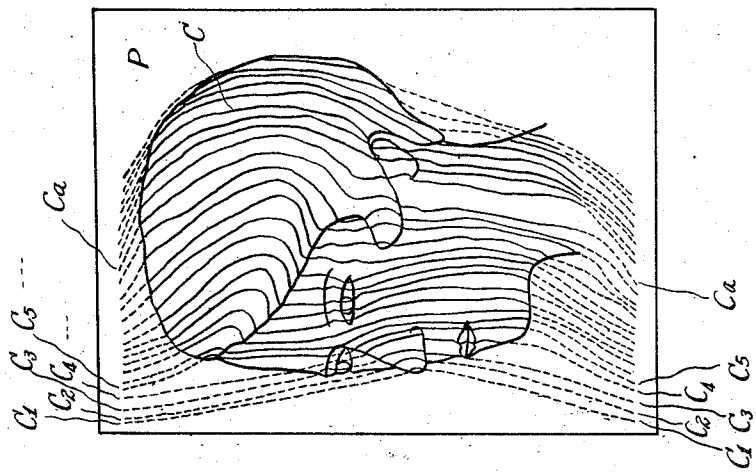

fig. 3

I. Morioka
INVENTOR

By: Marks & Clerk
ATTYS.

Sept. 24, 1935. I. MORIOKA 2,015,457

PROCESS FOR MANUFACTURING A RELIEF BY THE AID OF PHOTOGRAPHY

Filed Feb. 20, 1933

2 Sheets-Sheet 2

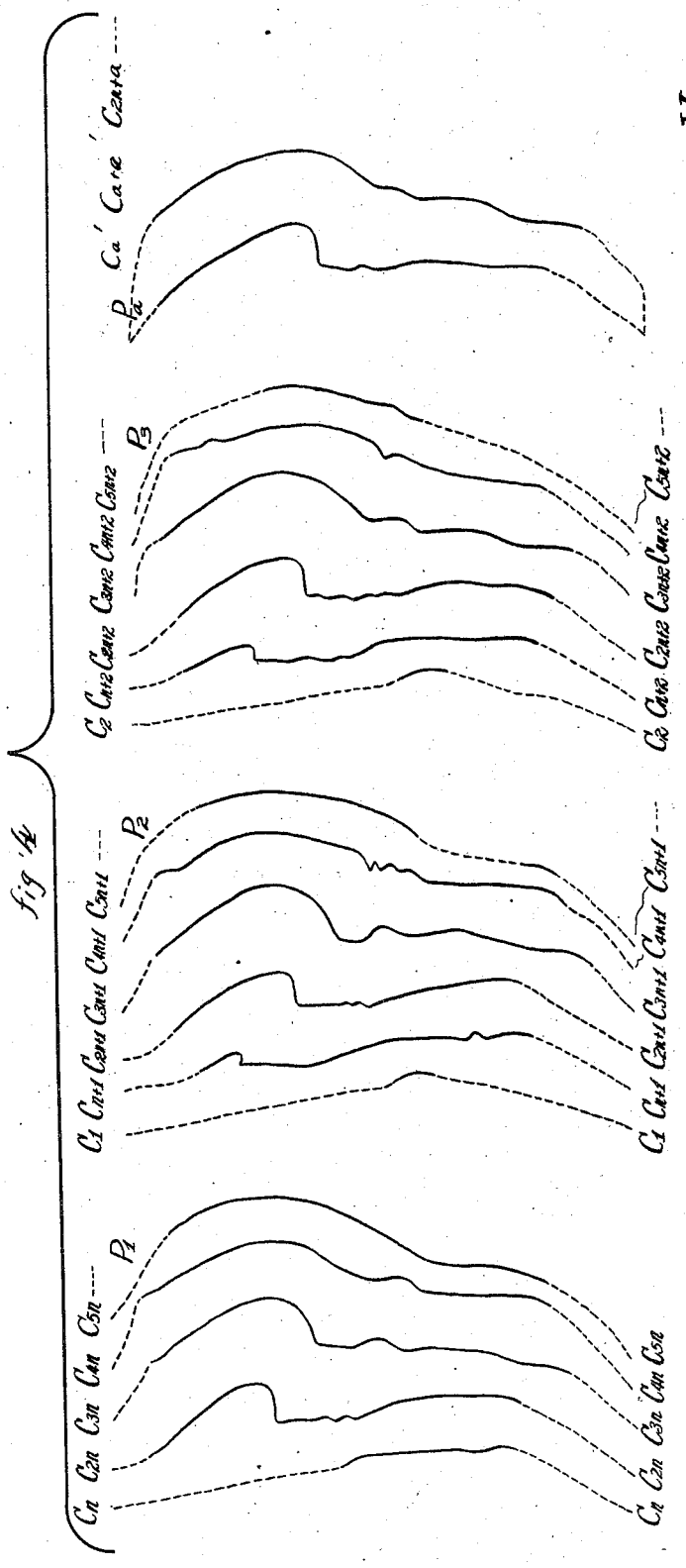

fig 4

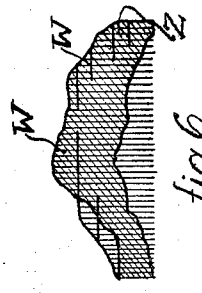

fig. 6

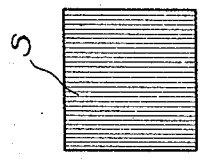

fig 9

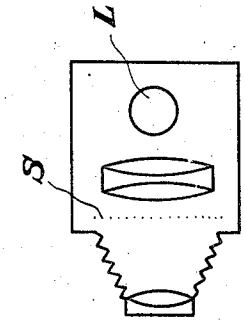

fig 8

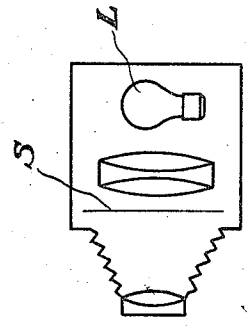

fig 7

I. Morioka
INVENTOR

By: Marks & Clerk
Attys.

Patented Sept. 24, 1935 2,015,457

UNITED STATES PATENT OFFICE

2,015,457

PROCESS FOR MANUFACTURING A RELIEF BY THE AID OF PHOTOGRAPHY

Isao Morioka, Meguro-Ku, Tokyo, Japan

Application February 20, 1933, Serial No. 657,721
In Japan March 2, 1932

3 Claims. (Cl. 41—25)

A process for manufacturing a relief by the aid of photography.

This invention relates to a process for manufacturing a relief by the aid of photography consisting in making several sheets of pictures of the same photograph taken from an object upon the surface of which has been projected a great number of lines shadows, then obtaining strips of the pictures by cutting them off along the curved lines appearing on them, in one picture at intervals of such several curved lines, and in the other pictures along the curved lines displaced in a regular order, and finally assembling and binding together such strips, each of which has a curved side corresponding to the cut off curved line, with a definite relationship.

The invention has for its object to manufacture a relief by the aid of photography easily.

In the appended drawings illustrating diagrammatically the process according to the invention, Fig. 1 is a perspective view explaining the process of taking a plane photograph according to the invention; Fig. 2 is a plan thereof; Fig. 3 shows a plane photograph taken by the use of the process shown in Figs. 1 and 2; Fig. 4 indicates the curved lines along which cutting off is to be performed; Fig. 5 illustrates a strip obtained by the cutting off operation and having a curved side corresponding to the cut off line; Fig. 6 illustrates in cross sectional plan the manner of assembling many of such strips as shown in Fig. 5; Fig. 7 is one embodiment of a device adapted for use in projecting the lines shadows upon the surface of an object of which a photograph is to be taken; Fig. 8 is a plan thereof; and Fig. 9 shows a screen used in the device as shown in Figs. 7 and 8.

With reference to the drawings, a screen S, which consists of a number of lines arranged parallel at suitable intervals, is situated between a source of light L and an object O of which a photograph is to be taken, and the shadows of the lines are projected upon the surface of the object to form a great number of curved lines C thereon. In order to take a photograph of such object a photographic camera K is at such a position that the lens axis of the camera may make a suitable angle, for instance, α, with the direction in which the light passes from the source of light to the object, and a photograph is taken of the object. This photograph, if necessary can be enlarged or reduced on a uniform ratio by means of a suitable method, for example, by such an enlarging method as described in U. S. Patent No. 1,853,072. Then, according to the invention a number, for example, n number of sheets of pictures are made from the same photograph and these sheets are cut off for making the strips of the same. For this purpose, the cutting off is, for example, done with the first sheet of picture P, along every nth curved line appearing thereon, counted from the right hand side. That is, the cutting off is done along the nth line, $2n$th line, $3n$th line, etc. In the same way, with the second picture P_2 the cutting off is done along every $(n+1)$th line, that is, along the 1st line, $(n+1)$th line, $(2n+1)$th line, $(3n+1)$th line, etc. With the third picture P_3 along every $(n+2)$th line, that is, along the 2nd line, $(n+2)$th line, $(2n+2)$th line, $(3n+2)$th line, etc. The cutting off is in a similar way proceeded with every other picture, covering the whole number of the curved lines originally formed upon the photographed object. In this way, strips Z, each with a curved side corresponding to the cut off line, are obtained. These strips are then assembled with definite intervals and with a definite relationship, and bound together so as to form a curved surface corresponding to the complete assemblage of the curved lines of the whole strips. In this way a relief manufactured by the aid of photography is obtained.

Suppose now, for a practical example, that the picture P made as above contains a thousand of curved lines. For such a case, ten sheets of pictures of the same photograph are conveniently made; that is, in this case $n=10$, and the cutting off is done as follows:

With the first picture P along the following numbered curved lines: 10, 20, 30, . . ., 980, 990, 1000; with the second picture P: 1, 11, 21, 31, . . ., 981, 991; with the third picture P; 2, 22, 32 . . ., 982, 992; and so forth. With the ninth picture P: 8, 18, 28, 38, . . ., 988, 998, and finally with the tenth picture P: 9, 19, 29, 39, . . . 989, 999. In this way, a thousand of strips Z with relatively a great width and with a curved side corresponding to the cutoff curved line, are obtained.

These strips Z are then assembled and bound together with definite spaces between them and by having the upper and lower portions of each strip arranged with a definite relationship. For example, a wire W is used to connect the strips, and paste is filled within the spaces left between the strips.

It has been known that light is projected through a screen upon the surface of an object of which a photograph is to be taken, forming thereby shadows of lines upon the surface of the

object, and of such object a photograph is taken, and a relief photograph is made by making use of the curved lines appeared on the photograph. In such a case, it is the matter of course that a very great number of curved lines must be used if any precise embodiment of the relief photograph is to be obtained. However, when such a very great number of curved lines is used, the spaces left between the curved lines become unavoidably so small that the cutting off along the curved lines can not be done without much difficulty. And further, the assembling operation of the strips, obtained by cutting off as above, will also become very difficult.

According to the invention such drawbacks can be avoided by reproducing several sheets of photographed pictures from one and the same photograph, and by obtaining therefrom a desired number of strips of the pictures, each strip with a curved side corresponding to the cut off line, and having relatively a great width sufficient for an easy assemblage of the strips.

The invention is not limited to the details of the practical example above mentioned, and may be modified suitably without departing from the salient feature of the invention that consists in that the strips Z are manufactured in such a way that they may be of a sufficient width for making their assemblage relatively easy. Thus the selection of the curved lines along which the cutting off is to be done may be performed suitably in other ways than as described above, according to the size of a relief to be manufactured, and the order in which the cutting off is done along the curved lines, and the number of the strips, or of the curved lines for use in the assemblage, may be properly selected and varied.

I claim:

1. A process for the manufacture of a relief of an object comprising projecting a large number of line shadows upon the object, at which object the angle is acute between the direction of a projecting light and the axis of the lens of a camera, making a plurality of sheets of pictures of said object with the line shadows projected thereon, cutting each of said sheets along a series of non-successive lines, separated by a predetermined number of spaces, each number of the series along which one sheet is cut being one space from the corresponding number of the series next to that series and assembling and binding together the strips thus obtained in the original order of curved lines.

2. The process as set forth in claim 1 in which each sheet is cut along lines separated by a number of spaces which is an exact divisor of the total number of spaces.

3. The process as set forth in claim 1 in which the number of pictures taken is an exact divisor of the number of spaces between the line shadows.

ISAO MORIOKA.