Jan. 13, 1925. 1,522,717

E. N. FROST

FEED MECHANISM FOR DISK BLANKS

Filed June 1, 1920 2 Sheets-Sheet 1

Fig. 1.

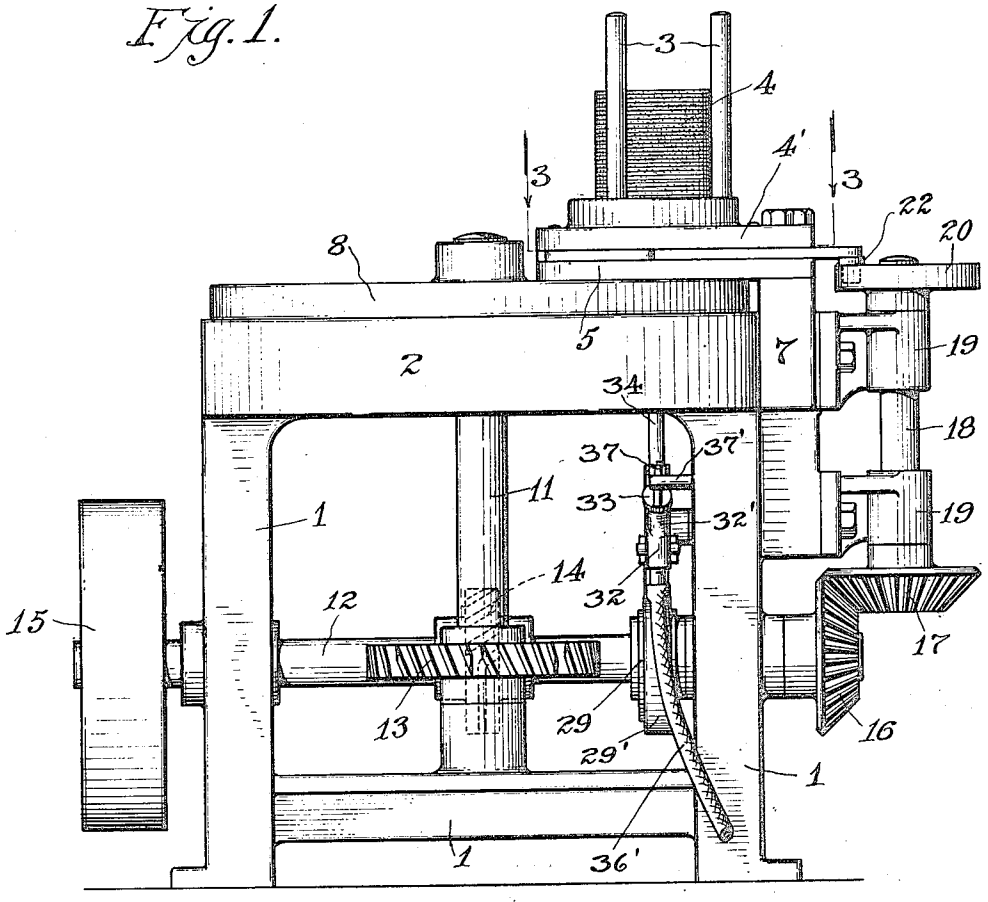

Fig. 5.

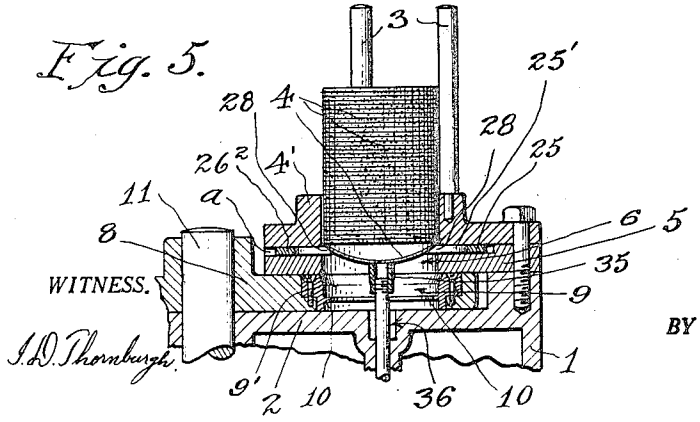

WITNESS.

I. D. Thornburgh.

INVENTOR.

E. N. Frost

BY Wacker & Li ATTORNEY.

Jan. 13, 1925. 1,522,717

E. N. FROST

FEED MECHANISM FOR DISK BLANKS

Filed June 1, 1920 2 Sheets-Sheet 2

Fig. 2.

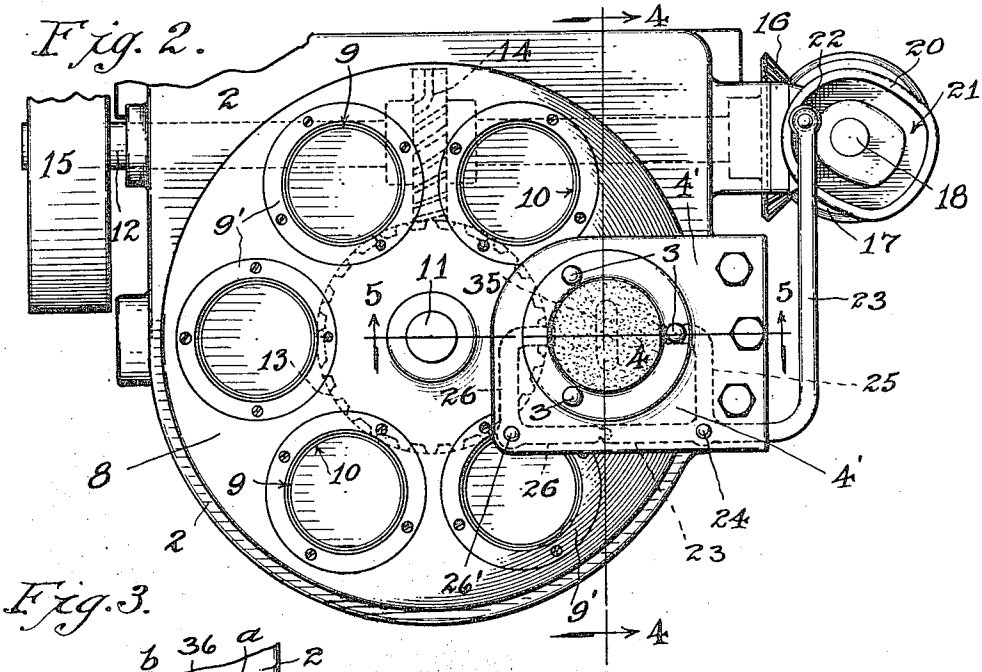

Fig. 3.

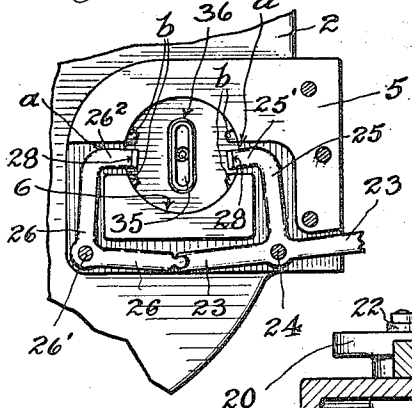

Fig. 4.

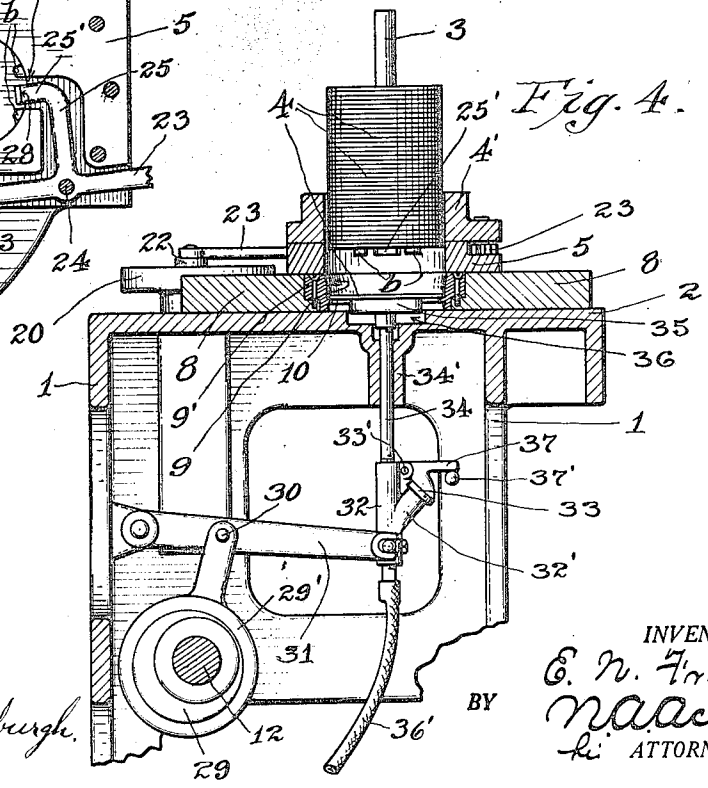

WITNESS.

J. D. Thornburgh.

INVENTOR.

E. N. Frost

BY

Naacke

ATTORNEY.

Patented Jan. 13, 1925.

1,522,717

UNITED STATES PATENT OFFICE.

EDWARD N. FROST, OF HONOLULU, TERRITORY OF HAWAII, ASSIGNOR TO AMERICAN CAN COMPANY, OF HONOLULU, HAWAII, A CORPORATION OF NEW JERSEY.

FEED MECHANISM FOR DISK BLANKS.

Application filed June 1, 1920. Serial No. 385,856.

To all whom it may concern:

Be it known that I, EDWARD N. FROST, a citizen of the United States, residing at Honolulu, in the county of Oahu and Territory of Hawaii, have invented certain new and useful Improvements in Feed Mechanism for Disk Blanks, of which the following is a specification.

The hereinafter described invention relates to means for successively feeding disk blanks from a stack of blanks contained within a holder and delivering the same within a seat of a horizontally movable carrier positioned for movement beneath the bottom of the holder for the disk blanks; the object of the invention being to expeditiously and efficiently actuate suction or vacuum means in timed relation with the horizontally movable carrier for withdrawing the lowermost disk of a stack of disk blanks contained within a holder and depositing the same within an orifice of the carrier positioned in axial alignment with the holder for the stack of disk blanks.

The disk blanks utilized in connection with the working of the present invention are preferably formed of paper or other fibrous material, and the same are utilized for the cutting therefrom of an annulus or ring liner adapted for applying to the flange of a can for use as a gasket liner in the hermetic sealing of containers for food products; the carrier disk associated with the feed mechnism for the disk blanks and actuated in timed relation therewith, serves as the means where an annulus is to be cut or severed from the disk blanks and applied to the flange of can ends for conveying the disk blanks to the mechanism for cutting an annulus therefrom and to the means for assembling the same relative to the flange of a can end. In other words, the preferred use to which the invention is put is in connection with can making and canning machinery, although the use thereof is not so restricted, inasmuch as the feeding mechanism and the associated horizontally movable carrier may be utilized where a gasket liner or annulus is not required to be cut or severed from the disk blanks.

To comprehend the invention reference should be had to the accompanying sheets of drawings, wherein—

Fig. 1 is a side elevation of the improved apparatus, disclosing the means for actuating the respective working parts thereof, illustrating a holder adapted to contain a stack of disk blanks, the horizontally movable carrier working beneath the same, the means for separating the lowermost disk blank from the stack of disk blanks contained within the holder, and the vacuum means for removing said separated blank and depositing the same into a seat or orifice of the horizontally movable carrier.

Fig. 2 is a part broken top plan view of the mechanism illustrated by Fig. 1 of the drawings.

Fig. 3 is a broken detail sectional view taken on the line 3—3, Fig. 1 of the drawings, and viewed in the direction of the arrows, said view illustrating more particularly the means for separating the lowermost blank from the stack of blanks contained within the disk blank holder.

Fig. 4 is a vertical sectional view taken on the line 4—4, Fig. 2 of the drawings and viewed in the direction of the arrows, illustrating the suction means for removing the lowermost separated disk blank of the stack of blanks from within the holder, the means for actuating the same, and the horizontally movable carrier with an orifice thereof in axial alignment with the holder for receiving the lowermost disk blank withdrawn from the stack of disk blanks contained therein.

Fig. 5 is a broken detail vertical sectional view in elevation, illustrating the suction means positioned for removing the lowermost separated disk blank.

In the drawings, the numeral 1 is used to indicate any suitable form of a frame capable of sustaining the working parts of the apparatus, which frame, in the present case, is provided with a horizontally disposed bed 2. Above this bed and to one side of its center is arranged an open bottomed vertically disposed holder 3, adapted to contain therein a stack of disk blanks 4 formed, preferably, of fibrous material, the said holder in the present case being formed by

a series of spaced rods. The holder as illustrated is provided with an open bottom plate 4′ attached to a horizontally disposed sustaining plate 5 provided with an opening 6 equal in diameter to that of the discharge opening of the bottom plate 4′ through which the disk blanks are drawn. The sustaining plate 5 is bolted or otherwise secured to a vertical bracket 7 united to the frame of the machine, Fig. 1 of the drawings, and is arranged to overhang the bed 2 of the apparatus a slight distance above the same and to serve as a spacer block to support the holder 3 ad allow the horizontally disposed carrier 8 to move beneath the same.

The carrier 8, in the present case, comprises a circular turret provided circumferentially with a series of vertically spaced disposed orifices 9, each provided with a ring 9′ having an inwardly projecting retaining ledge 10 for sustaining a disk blank therein. The turret 8 works over the face of the horizontal bed 2 and a portion thereof moves beneath the sustaining plate 5, so that during the movement thereof the disk blank receiving orifices 9 are brought successively into registry and axial alignment with the bottom plate 4′ and the opening 6 of the spacer block 5.

Said turret is attached to the upper end of a vertical shaft 11 extended through the bed 2 and centrally disposed within the frame 1 of the apparatus, Figs. 1 and 2 of the drawings, intermittent rotary motion being imparted to the said shaft from a transverse drive shaft 12 through the medium of a mutilated worm gear 13 thereon meshing with a worm 14 secured to the drive shaft 12. The said drive shaft is driven from an outside source of power by means of a drive belt (not shown) working over a belt pulley 15, secured to one end of the shaft.

To the end of the drive shaft 12 opposite to that carrying the pulley belt 15 is secured a bevel gear 16, which meshes with a corresponding gear 17 secured to the lower end of a short vertical shaft 18 working in bearing 19, Fig. 1 of the drawings, so that the rotary motion of the drive shaft 12 is transmitted to the vertical shaft 18. At its upper end the shaft 18 carries a grooved cam 20, within the cam groove 21 of which works a follower roll 22. This roll is carried at the outer or free end of a crank lever 23, fulcrumed at 24 to the spacer block 5, Figs. 2 and 3 of the drawings. The said fulcrumed lever 23 is provided with an arm 25, which terminates in an angle extension 25′, the spacer block 5 being cut away as disclosed by Fig. 3 of the drawings to receive the same, also to receive the crank lever 26 fulcrumed at 26′ to said plate. One arm of the lever 26 is articulated to the free end of the crank lever 23, while its opposite arm is provided with an angular extension 26^2 corresponding to the extension 25′ of the arm 25. The angular extensions 25′ and 26^2 are adapted to move into and out of the opening 6 of the spacer block 5 through the cut-out portions *a* and intermediate the lugs *b* inwardly projecting within the opening 6 and which lugs *b* serve to sustain the stack of disk blanks within the holder 3.

Each extension 25′ and 26^2 adjacent its outer end is formed with a shoulder 28, Fig. 5 of the drawings, so as to engage the periphery of the lowermost disk of the stack of disk blanks when thrown inwardly in order to buckle the same to clear the supporting lugs *b*. Inasmuch as these extensions are moved into and out of the sphere of the opening 6 of the spacer block 5 by the throw imparted to the crank arm 23 from the cam 20, the same serve as slide cut-outs for the lowermost disk of the stack of disk blanks.

On the drive shaft 12 and within the frame of the machine is mounted for rotation an eccentric 29, Figs. 1 and 4 of the drawings, the ring or strap 29′ of which is pivoted at 30 to a lever 31 pivoted at one end to the frame of the machine. The opposite end of said lever is bifurcated and to the same is trunnioned the barrel 32, provided with a ported branch extension 32′, which is controlled by a valve 33 hinged at 33′ to the said barrel. From the barrel 32 is upwardly extended a pipe section 34, which works through a guide 34′ and carries at its upper end a suction or vacuum cup or head 35 movable into and out of the opening 6 of the spacer block 5 and adapted when in its full raised position to engage the lowermost blank of the stack of disk blanks, Fig. 5 of the drawings. In its lowermost position the said suction cup or head rests within a seat 36 formed in the upper face of the table or bed 2 of the frame 1. To the lower end of the barrel 32 is attached a suction tube 36′, which is connected with any suitable suction or vacuum means.

The operation of the apparatus is as follows, assuming the inter-connected parts actuating in timed relation.

Motion intermittently imparted to the turret 8 places the vertically disposed orifices 9 thereof in vertical alignment with the opening 6 of the spacer block 5. By this time the cut-out slides 25′ and 26^2 will have been thrown inwardly by the action of the levers 23 and 26 to buckle the lowermost blank of the stack of disk blanks 4 contained within the holder 3 to clear the supporting lugs *b* from the stack of disk blanks. During the stop period of the carrier or turret 8 with an orifice 9 in alignment with the opening 6 of the spacer block 5, the action of the eccentric 29 throws the lever 31 to raise the barrel 32 and the suction head 35 to place the latter in contact with the under-face of the buckled lowermost disk blank of the

stack 4, during such movement the valve 33 being closed. With contact thus made between the suction cup or head 35 and the buckled lowermost disk of the stack of disk blanks, the same is exposed to the full suction or vacuum and adheres firmly thereto. The action of the eccentric 29 then lowers the barrel 32 and the suction cup or head 35, while at the same time the cut-out slides 25′ and 26² are thrown to release the buckled disk blank, the stack of disk blanks then lowering until the lowermost one thereof rests upon the sustaining lugs *b*, which places the same in position to be acted on by the next inward throw of the said cut-out slides. With the downward movement of the suction head or cup 35 the disk blank adhering thereto is drawn through the opening 6 of the spacer block 5 and moved within the axially aligned orifice of the carrier 8, by which time the suction is destroyed or broken by the lug extension 37 of the hinged valve 33 engaging with the stud 37′ projecting from the frame of the machine, Fig. 4 of the drawings, and causing the raising of the valve to open the ported extension 32′ of the barrel 32 as the same approaches the limit of its downward movement. At such time the vacuum cup or head 35 rests within the seat 36 of the table 2 and the removed disk blank seated within the aligned orifice of the carrier 8. Step motion is then imparted to the carrier 8, which moves the orifice thereof with the disk blank deposited therein from beneath the holder for the stack of disk blanks and brings another orifice of the said carrier into alignment with the opening of the spacing blocks for the reception of another disk blank, when the operation previously described is repeated, it being understood that the hinged valve 33 moves to close the ported extension 32′ of the barrel 32 as the same is moved upwardly.

The actuating parts of the apparatus are operated in timed relation, so that the buckling of the lowermost disk of the stack of disk blanks and the withdrawal thereof does not take place until an orifice of the carrier 8 is placed in alignment with the discharge opening 6 of the spacer block 5. In other words, the respective parts are so timed relative to each other, that they come into action at the proper time for the carrying out of the described steps, the said parts being automatically placed into operation.

So far as I am aware the present invention is the first wherein a carrier provided with a receiving and supporting orifice for the reception of disk blanks is provided for movement relative to an open bottomed holder for a stack of disk blanks to place the orifice thereof in alignment with the open bottom of the holder, with suction means associated and actuated in timed relation therewith for movement into and out of the orifice thereof and adapted to engage the lowermost blank of the stack of disk blanks, withdraw the same and deposit the withdrawn blank within the positioned orifice of the carrier, and I wish to be understood as covering as broadly as the state of the art will permit such combination of coacting instrumentalities and this irrespective as to the detailed construction thereof; being well aware that the shape of the orifice of the carrier for the blanks may be varied to conform to the shape of the blanks to be used, and the details of construction of the working parts of the apparatus herein shown and described may be varied, changed and modified without creating a departure from the nature and scope of the invention.

Having thus described the invention what is claimed as new and desired to be protected by Letters Patent is:—

1. A feed mechanism for blanks, the same comprising a holder adapted to contain a stack of blanks, a horizontally disposed carrier positioned for movement beneath the holder and provided with an orifice having a peripheral shoulder for receiving and retaining blanks, means co-acting with the holder for separating the lowermost blank from the stack contained therein, suction means workable through the orifice of the carrier when in alignment with the said holder for withdrawing the separated lowermost blank of the stack contained therein and depositing the same on the shoulder within the said orifice, and inter-connected associated working instrumentalities for actuating the said respective means in timed relation.

2. A feed mechanism for blanks, the same comprising an open bottomed holder adapted to contain a stack of blanks, a horizontally movable carrier movable beneath said holder and provided with a plurality of orifices having peripheral shoulders for successively aligning axially with the holder to receive the lowermost blank as removed from the stack contained within the holder, means for separating the lowermost blank from the stack of blanks within the holder, suction means movable through an orifice of the carrier when axially aligned with the blank holder for removing the lowermost separated blank and depositing the same on the shoulder within the said orifice, and inter-connected associated working instrumentalities for actuating said respective means in timed relation.

3. A feed mechanism for blanks, the same comprising a holder adapted to contain a stack of blanks, means co-acting therewith for successively separating the lowermost blank from the bottom of the stack, an orificed carrier movable beneath the holder the orifice thereof being formed with inwardly extending shoulders, means for in-

termittently placing the orifice of the carrier in axial alignment with the holder, suction means movable through the said orifice when in axial alignment with said holder for removing the separated blank of the stack and depositing the same on the shoulder within said orifice and co-operating mechanism for actuating said respective means in timed relation.

4. A feed mechanism for blanks, the same comprising a holder adapted to contain a stack of blanks, means for successively separating the blanks from the bottom of the stack, a carrier provided with a plurality of orifices for receiving blanks from the stack within the holder the orifices of the carrier having inwardly extending peripheral shoulders, means for imparting intermittent step movement to said carrier to successively place the orifices thereof in axial alignment with the holder for the blanks, suction means movable through an aligned orifice for withdrawing the separated lowermost blank of the stack and depositing the same on the shoulder within said orifice, means for making and breaking the air suction in accordance with the movement of the suction means, and co-operating mechanism for actuating said respective means in timed relation.

5. The combination with a holder adapted to contain a stack of blanks, means for separating the lowermost blank of the stack, a carrier provided with blank receiving orifices movable beneath the holder the orifices of the carrier having inwardly extending peripheral shoulders, means for actuating said carrier for placing its orifices successively in axial alignment with the holder, suction means movable into and through an aligned orifice of the carrier for withdrawing a separated blank and depositing the same into said orifice on the shoulder thereof, and co-operating mechanism for actuating said respective means in timed relation.

6. The combination with a holder adapted to contain a stack of blanks, a carrier provided with a succession of shouldered orifices for supporting blanks, and positively acting means co-acting therewith for withdrawing the lowermost blank downward from the stack of blanks and holding it while it is being transferred and depositing the same accurately on the shoulder within an orifice of the carrier in axial alignment with the holder for the stack of blanks.

7. The combination with a horizontally movable carrier provided with a plurality of blank receiving orifices, the orifices of the carrier having inwardly extending peripheral shoulders, of an open bottom holder situated above the carrier within the path of the orifices thereof, means for intermittently actuating said carrier to place the orifices thereof successively in axial alignment with the holder, and suction means movable into and through an aligned orifice of the carrier for withdrawing the lowermost blank from the stack of blanks, holding the blank while it is being transferred and depositing the same accurately on the shoulder within the aligned orifice of the carrier.

8. The combination with a horizontally rotatable carrier turret provided with a plurality of circumferentially disposed spaced orifices, the orifices of the carrier having inwardly extending peripheral shoulders, of a holder adapted to contain a stack of blanks situated above the turret within the path of the orifices thereof, means for imparting step rotation to the turret for successively placing the orifices thereof in axial alignment with the holder, and suction means movable into and through an aligned orifice of the turret for withdrawing the lowermost blank of the stack of blanks and depositing the same on the shoulder within said orifice.

9. The combination of a stack holder adapted to contain a stack of fibre disks, a carrier provided with a shouldered orifice, and a suction member for engaging the lowermost fibre disk in the holder and delivering it accurately within the orifice and upon the shoulder in said orifice.

10. The combination of a rotary turret having blank-receiving orifices, a blank-holder above said turret, and a suction head reciprocating through said orifices successively to deposit therein blanks from said holder.

11. The combination of a stack holder adapted to contain a stack of fibre disks, and having near its bottom immovable inward projections for supporting said stack, means for pressing inwardly the edge of the lowermost disk to facilitate its disengagement from said projections, means for drawing downward said disk after it has been so collapsed, and an orificed carrier having means moving with the carrier for supporting in said orifice a disk so removed from said stack.

12. The combination of a bed, a carrier rotary thereover and provided with shouldered orifices to receive flexible blanks, a blank holder arranged above said carrier, a suction device guided by said bed and operating under said holder to withdraw blanks therefrom and deposit them in said orifices of the carrier, and mechanism operating said carrier and suction device intermittently, whereby the suction device is projected upward through an orifice of the carrier when the latter is stationary and said carrier is turned when the suction device has deposited a blank and has descended below said carrier.

13. The combination of a carrier provided with orifices to receive flexible blanks, a blank holder arranged above said carrier, a suction device operating under said holder to withdraw blanks therefrom and deposit them in said orifices of the carrier, and mechanism operating said carrier and suction device intermittently, whereby the suction device is projected upward through an orifice of the carrier when the latter is stationary and said carrier is turned when the suction device has deposited a blank and has descended below said carrier.

In testimony whereof I have signed my name to this specification.

EDWARD N. FROST.