Oct. 31, 1933. F. KULL 1,932,742

MUSICAL WIND INSTRUMENT

Filed Nov. 12, 1932 2 Sheets-Sheet 1

Fig. 1.

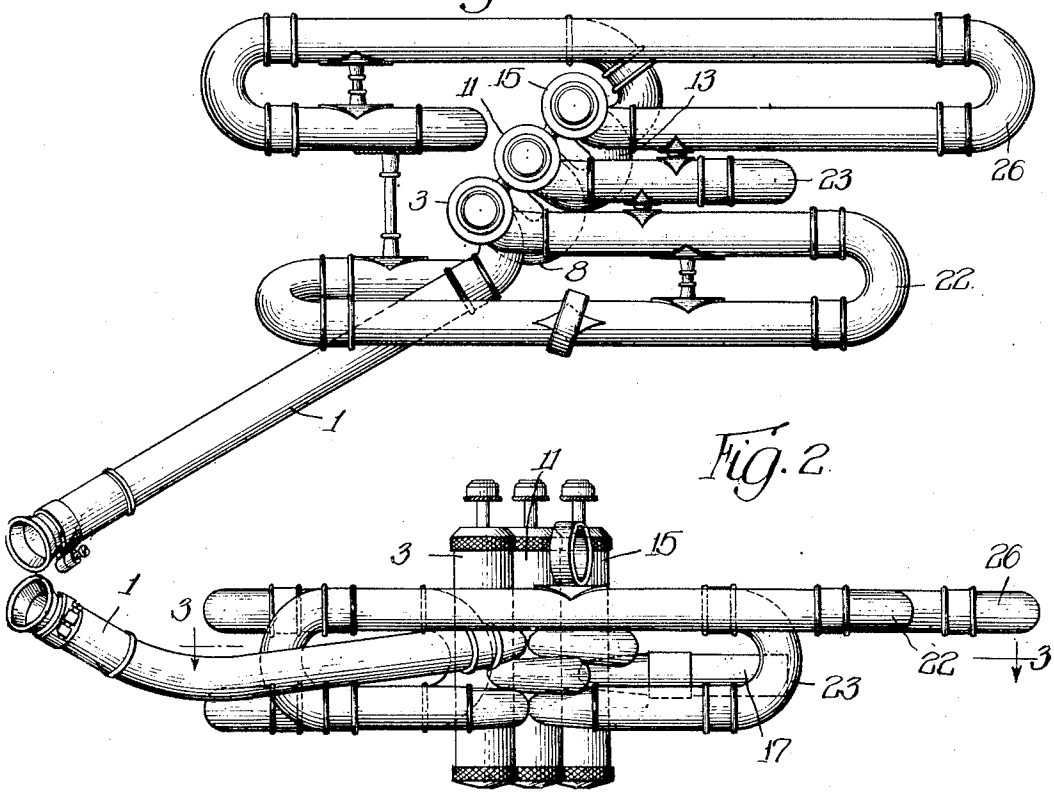

Fig. 2.

Fig. 3

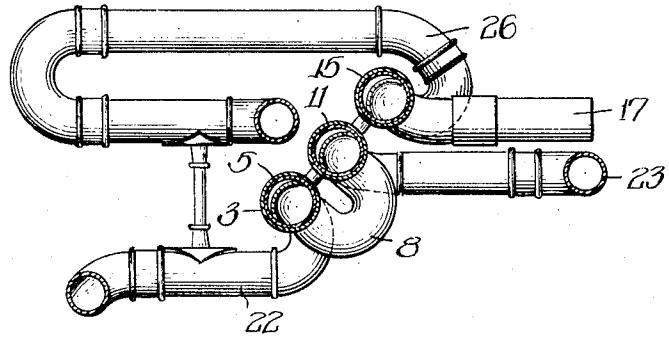

Inventor:
Fred Kull,
By Cromwell, Greist + Warden
attys

MUSICAL WIND INSTRUMENT

Filed Nov. 12, 1932 2 Sheets-Sheet 2

Fig. 4

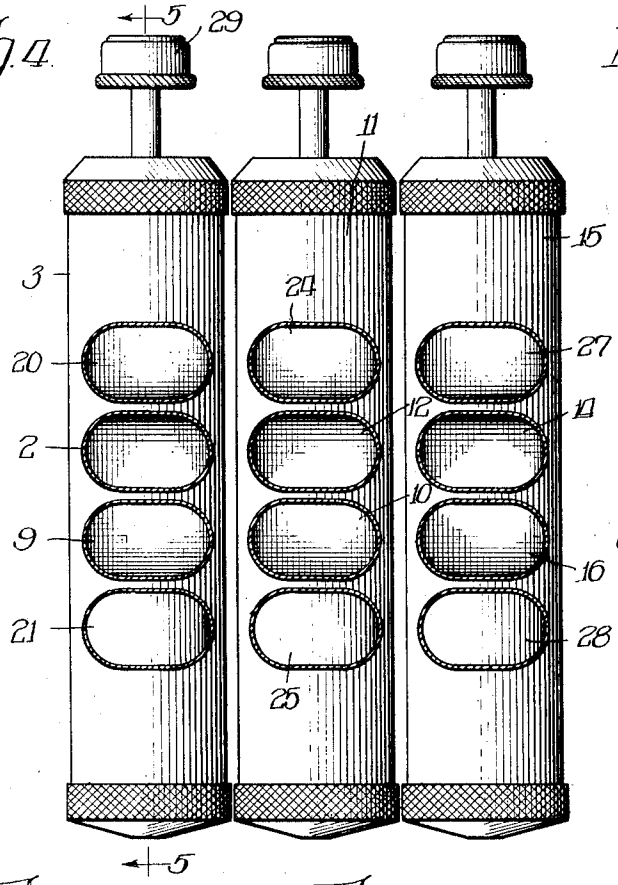

Fig. 5

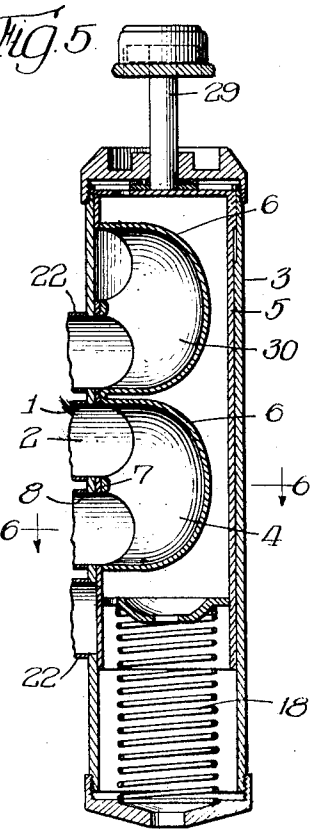

Fig. 7

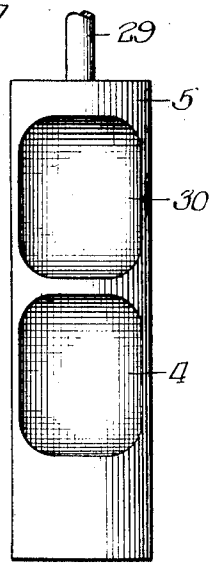

Fig. 8

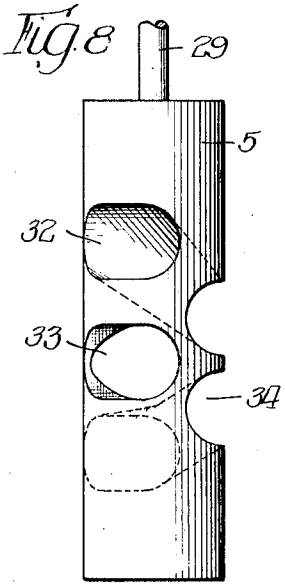

Fig. 6

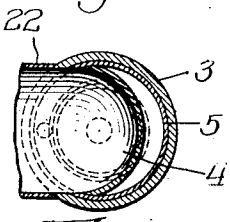

Fig. 9

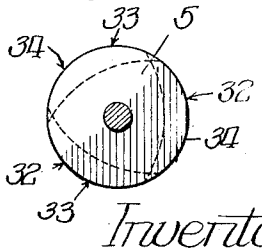

Inventor:
Fred Kull,
By Cromwell, Greist & Warden
Attys

Patented Oct. 31, 1933 1,932,742

UNITED STATES PATENT OFFICE

1,932,742

MUSICAL WIND INSTRUMENT

Fred Kull, Elkhorn, Wis.

Application November 12, 1932
Serial No. 642,355

4 Claims. (Cl. 84—388)

The present invention relates to musical wind instruments and has particular reference to improvements in the valve structure thereof.

A principal object of the invention is to provide a musical wind instrument having one or more valves for controlling the flow of air through windpipes, in which the length of stroke of the valves is relatively short as compared with the diameter of the windpipes.

An additional object is the provision of a musical wind instrument having an increased potentiality for rapid, easy and good execution of musical notes.

A further object is to provide an instrument of the type described which is economical in manufacture.

These and other objects will become apparent from a consideration of the following illustrative and explanative description and by reference to the accompanying drawings, in which

Fig. 1 is a plan view of the windpipes and valve structure of a musical wind instrument of the so-called "bass" type constructed in accordance with my invention;

Fig. 2 is a side view of the instrument shown in Fig. 1;

Fig. 3 is a sectional view taken along line 3—3 of Fig. 2;

Fig. 4 is a detailed view of the valve structure of the instrument shown in Fig. 1;

Fig. 5 is a sectional view of one of the valves taken along line 5—5 of Fig. 4;

Fig. 6 is a cross sectional view taken along line 6—6 of Fig. 5;

Fig. 7 is a view of a modified form of a valve piston;

Fig. 8 is a view of an additionally modified valve piston; and

Fig. 9 is a top view of the piston shown in Fig. 8.

A musical wind instrument of the valve type consists of a series of windpipes leading from a mouthpiece to an outlet horn which imparts resonance to the sound waves developed by the artist, and a valve mechanism by which the path of flow of the sound waves through the instrument may be selectively controlled, whereby to vary the distance of travel of said sound waves. The number of valves may vary, depending upon the particular type of instrument, but will usually be one, two, three, four or five in number. The valves of most band instruments are the piston type in which the windpipes of the horn are connected to an outer casing in which a piston is reciprocably mounted, the piston being provided with channels by which the sound waves are transferred from one windpipe to another. By changing the distance of travel of the sound waves passing through the horn the primary pitch of the instrument may be varied to obtain different tones.

In the instruments known heretofore it has been customary to provide passages through the valve structure that are, in the main, circular in cross section and of the same size as the bore of the windpipes. Thus, the casing and piston ports conform in size and shape cross sectionally to the size and shape of the windpipes. However, there are usually three separate passages through the pistons in different directions, and at the points where these passages cross over or under one another, it is common practice to constrict them so as to get these passages closer together and thereby shorten the necessary stroke of the piston, which must be sufficiently long to cut off one windpipe and connect up with another. This sacrifice of clear air or sound passage, and the impairment of free blowing and tone quality resulting therefrom, is justified solely on the grounds of expediency, since it evades the longer stroke that otherwise would be required to register the desired ports to connect windpipes necessary to produce some notes, and which would limit the use of the instrument and impede its facile and rapid operation, and also saves the cost of performing the hard task of enlarging the cross sectional area of these passages at the said points so as to maintain preferable uniformity of cross sectional area therein throughout. This objectionable long stroke in musical wind instruments of the valve type has confronted the art since its inception but heretofore no satisfactory solution has been presented.

It has been suggested to divide the windpipes into two circular sections and to multiply the number of ports or channels in the valve piston correspondingly, the branches of the windpipe having a cross sectional area equal to the cross sectional area of the pipe, whereby the stroke of the piston is reduced in length the difference between the diameter of the windpipe and the diameter of the branches. This structure is objectionable for several reasons, including its complexity and the fact that the sound waves are subjected to alternate breaking up and commingling.

In accordance with my invention, the openings of the passages for the sound waves in the piston valve are increased in length transversely

of the direction of travel of the piston valve, thereby departing from a cylindrical bore construction.

In the drawings, the main section of windpipe to which the mouthpiece is attached is represented by numeral 1. This pipe communicates with the opening 2 of the valve casing 3 and the passage 4 of the piston 5. The opening 2 in the casing of the valve structure is increased in length transversely of the direction of travel of the piston 5, while preserving the required cross sectional area to suitably conform to the cross sectional area of the windpipe. The pipe 1 is integrally connected by soldering, brazing, welding or the like, to the casing 3 about the opening 2. To obtain this connection, it is necessary to distort the end of the pipe 1 from its cylindrical bore shape and to make it conform in shape and size to the shape and size of the opening in the casing.

The piston 5 is ordinarily hollow to afford preferable lightness, and the passage 4 is formed by cutting out a suitable opening in the piston and inserting and securing thereto a lining 6. This lining is preferably so fashioned that the passage of air and sound waves therethrough is as free as possible and so that the extent of the cross sectional area of said air passage throughout its length closely corresponds at all points to that of the cross sectional area of the bore of the instrument. In the modification shown in Fig. 5, the metal of the piston 5 divides the passage 4 along its central portion as at 7, the openings on each side of this portion acting to reverse the direction of the sound waves. The sound waves travel from the windpipe 1 through the passage 4 and out the auxiliary pipe 8 through an opening 9 similar to the opening 2. The auxiliary pipe 8 directs the sound waves through an opening 10 and the valve casing 11, a similar passage 4 being provided in the piston of casing 11, whereby the sound waves emerge through an opening 12 and are transferred by a second auxiliary pipe 13 through an opening 14 in valve casing 15. The latter casing is also provided with a passage 4 in its piston formed by a member 6 in the manner described heretofore with respect to the first valve of the series, whereby the sound waves emerge through an opening 16 of the valve casing 15 and are transferred to the atmosphere through a horn pipe 17.

The pistons 5 of the valve casings 3, 11 and 15 rest upon compressed springs 18 mounted in the bottom of the valve casings. These springs normally keep the piston 5 in raised position, as shown in Fig. 5. These springs may also be mounted above the piston.

Connected to the openings 20 and 21 of the valve casing 3 is a secondary windpipe 22 of medium length. A short secondary pipe 23 is connected in a similar manner to openings 24 and 25 of the valve casing 11. Likewise, a secondary windpipe 26, which is longer than the pipes 22 and 23, is connected to the openings 27 and 28 of the valve casing 15. The secondary windpipe 22 may be placed in the path of travel of the sound waves by depressing the corresponding plunger 29 of the piston 5, whereby the passage 4 of the piston which is mounted in casing 3 is pressed below the opening 2. The opening 2 will then communicate with the lower port of the passage 30 which is similar to passage 4 and positioned thereabove. The passage 30 reverses the direction of the sound waves in the manner described with respect to the passage 4 and when in communication with the windpipe 1 strikes the sound waves out of the opening 20 in casing 3 and through the secondary pipe 22. The sound waves pass from the secondary pipe 22 through opening 21 of the casing 3 and are then transferred through the opening 9, as described heretofore. The secondary windpipes 23 and 26 may be connected in series with the air passage through the instrument in a similar manner by depression of the plungers 29 of the valve pistons in casings 11 and 15, respectively.

In travelling through the windpipes and the valve structure of the instrument, the sound waves are alternatively passed through the cylindrical bore windpipes and the oval or flattened openings of the valve structure. The openings of the valve structure may vary considerably in shape depending upon the extent to which it is desired to shorten the stroke of the plunger 29. By employing openings in the valve structure which are lengthened transversely of the direction of travel of the plunger 29 the stroke of the plunger will still depend upon the width of the opening in the valve structure in a direction parallel to the direction of travel of the reciprocating plunger. It will be seen from Fig. 5 that the plunger 29 travels from a position in which the passage 4 communicates with pipes 2 and 8 to a position in which said passage communicates with pipes 8 and 22, a distance equal to the width of the openings plus the width of the portion 7 or the distance apart of adjacent openings. By substantially increasing the transverse width of the openings in the valve casings and the pistons and by decreasing the width of said openings along the longitudinal path of travel of the piston the length of the piston stroke is made materially less than in instruments known heretofore in which circular openings are employed.

It is preferred that the openings, or ports, in the valve mechanism, the passages through the valve pistons and the ends of the windpipes in so far as they depart from the shape, cross sectionally, of the windpipes in order to fit the openings in the valve casings, be of such cross sectional area, substantially that of the bore of the instrument, as to prevent material contraction or expansion of the sound waves travelling therethrough.

I have found that instruments constructed in accordance with my invention produce an excellent tone that is quite generally superior to the tone produced by instruments with the customary valves having three more or less devious and constricted passages through the pistons, and to the tone produced by instruments with windpipes that are forked at the cylinders and that have six passages through the pistons, some of which are likewise constricted.

In addition, the shortened stroke of instruments constructed in accordance with my invention increases their flexibility and ease of operation, a weaker spring 18 being capable of satisfactorily returning the piston to the raised position. Moreover, my invention admits of increasing the bore of instruments ordinarily limited by the length of practical stroke. It also admits of a simplified construction and reduced cost of production.

In the improved piston shown in Fig. 7, the pairs of openings are not spaced by the member 7 but are made integral. This structure is con-

siderably more simple than the piston shown in Fig. 5 and further increases the efficiency of the valve operation. In raised position, the passage 4 directs the sound waves from windpipe 1 into the auxiliary pipe 3, regardless of the elimination of the element 7. In depressed position, the passage 30 transfers the sound waves from the windpipe 1 through the secondary windpipe 22 and the passage 4 transfers the sound waves from the secondary windpipe 22 into the adjacent valve. This improved valve piston may be used in the valve casings shown in Fig. 4. While the total length of the opening 30 is greater than the circular dimensions of the windpipe 1, this total length acts in a dual capacity to receive the sound waves into the piston and to transfer the same through the second windpipe, the separated windpipes acting in the same manner as would a partition between the openings in the piston.

In Fig. 8 is shown another valve piston in which the passages 32, 33 and 34 pass transversely through the body of the valve piston. This type of valve is for use in connection with instruments in which it is desired that the various connecting windpipes be on different sides of the valve structure. That is, one portion of the windpipes may communicate with the valves on one side and another portion of the windpipes may communicate with the opposite side of the valve structure. The openings 32, 33 and 34 are of greater dimension in a direction transverse to the longitudinal axis of the valve piston than in a direction parallel to the longitudinal axis of the piston. While the passages may take any desired shape through the body of the piston, while adhering closely in their cross sectional area to the cross sectional area of the bore of the instrument, it is preferable that they be of somewhat uniform cross section, whereby the sound waves are not distorted in such a manner as to affect the quality of the tone obtainable from the instrument.

In the valve structure shown in Fig. 4, the four openings in the valve casing are in longitudinally spaced relation along a common axis. The resulting instrument is economical in manufacture and presents a more desirable appearance than in the case of an instrument where the openings in the valve casing are on different sides thereof.

In certain types of instruments, particularly of foreign make, a rotary valve is sometimes employed instead of a piston-type valve. However, the principle of operation of the rotary-type valve is substantially the same as in the piston-type valve, and it is possible to employ my invention in connection with instruments of the rotary valve type. It will be seen that my invention is susceptible of embodiment in forms other than herein specifically described and all such modifications as come within the spirit of my invention are intended to be included in the appended claims.

I claim:

1. A musical wind instrument, comprising a valve casing, a reciprocable piston in said casing, said casing having four openings arranged along the direction of reciprocation of said piston, said openings being longer in a direction transverse to the direction of reciprocation of said piston than in a direction parallel thereto, a windpipe connected to one of said openings, an auxiliary windpipe connected to another of said openings, and a secondary windpipe having one end connected to each of the remaining two of said openings, said piston having two separated passages of suitable cross sectional contour to admit of a cross sectional area uniformly substantially equal throughout to the cross sectional area of a casing opening and with piston passage openings to register with the openings in said casings, and operable to connect said auxiliary windpipe with said first mentioned windpipe in one position and to connect said secondary windpipe with said first mentioned windpipe in another position.

2. A musical wind instrument, comprising a valve casing having four openings arranged in spaced longitudinal relation along a common axis, and a piston reciprocably mounted in said casing, the openings in said casing being longer in a direction transverse to the drection of reciprocation of said piston than in a direction parallel thereto, and said piston having two spaced longitudnally extending passages adapted to communicate with the openings in said casing, the upper of said passages being co-extensive with the upper two of the openings in said casing, and the lower of said passages being co-extensive with the lower two of the openings in said casing.

3. A musical wind instrument, comprising a valve casing having four openings arranged in spaced longitudinal relation along a common axis, and a piston reciprocably mounted in said casing, the openings in said casing being longer in a direction transverse to the direction of reciprocation of said piston than in a direction parallel thereto, said piston having an upper passage formed in the side thereof and being co-extensive with the upper two of the openings in said casing and the lower passage spaced from said upper passage a distance equal to the distance between the two inner of said openings in the valve casing and being co-extensive with the lower two of the openings in said casing.

4. A musical wind instrument, comprising a plurality of valve casings, each having four openings arranged in spaced longitudinal relation, a piston reciprocably mounted in said casing, the openings in said casing being wider in the direction of reciprocation of said piston than in a direction parallel thereto, and said piston having two longitudinally spaced passages adapted to connect the intermediate two openings in said casing in one position and to register with the outer of said openings in another position, a main windpipe communicating with one of said intermediate openings on one of said valve casings, auxiliary windpipes communcating with the remainder of said intermediate openings on said casings, and secondary windpipe connecting the outer openings on each of said casings.

FRED KULL.