United States Patent [19]

Kessler

[11] **Des. 264,583**

[45] ** **May 25, 1982**

[54] **ELECTRONIC PACKAGE**

[75] Inventor: **Bayard F. Kessler**, Woodland Hills, Calif.

[73] Assignee: **Novation, Inc.**, Tarzana, Calif.

[**] Term: **14 Years**

[21] Appl. No.: **131,653**

[22] Filed: **Mar. 19, 1980**

[51] **Int. Cl.** ..... **D13—03**

[52] **U.S. Cl.** **D13/41**

[58] **Field of Search** ..... D13/12, 40, 41; 361/331, 332, 334, 364, 366, 380, 381, 384, 383, 390–395, 399; 174/50, 52 R

[56] **References Cited**

U.S. PATENT DOCUMENTS

D. 249,791 10/1978 Ainscow D13/41

3,617,610 11/1971 Katayama et al. ..... 361/331 X

3,668,476 6/1972 Wrabel et al. ..... 361/395 X

FOREIGN PATENT DOCUMENTS

2445792 4/1976 Fed. Rep. of Germany 361/380

Primary Examiner—Susan J. Lucas

Attorney, Agent, or Firm—Blakely, Sokoloff, Taylor & Zafman

[57] **CLAIM**

The ornamental design for the electronic package, substantially as shown.

DESCRIPTION

FIG. **1** is a perspective view of the electronic package illustrating the new design.

FIG. **2** is a top view of the new design.

FIG. **3** is a front view of the new design.

FIG. **4** is an end view of the new design.

FIG. **5** is a bottom view of the new design.

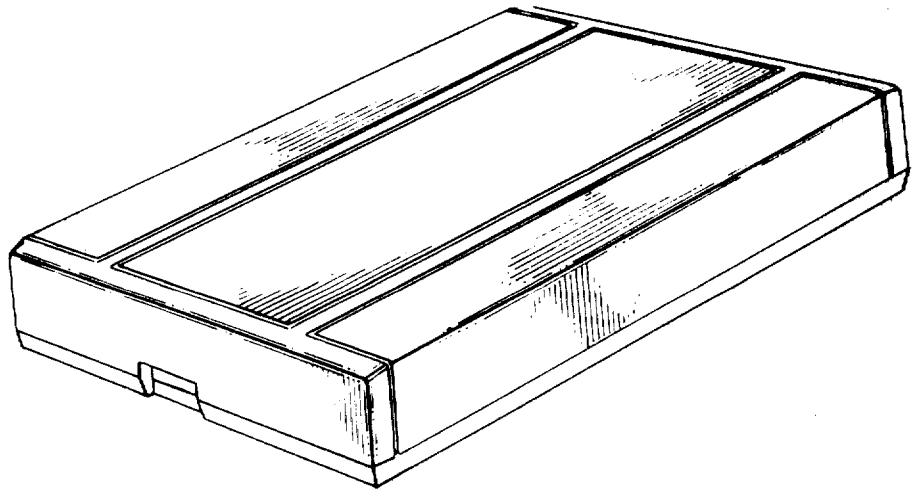

Fig. 1

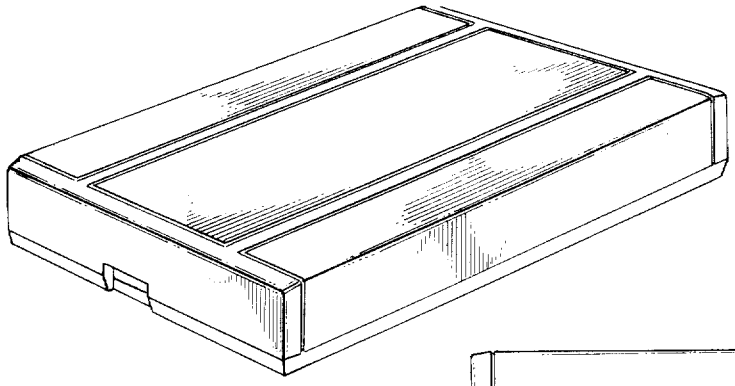

Fig. 2

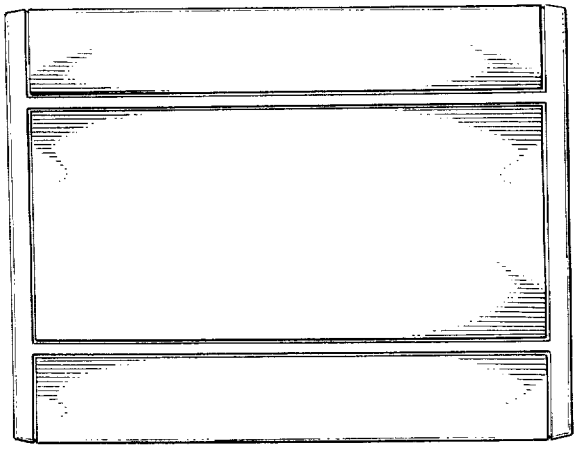

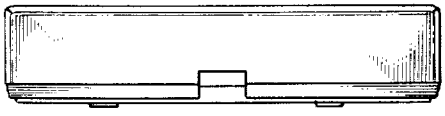

Fig. 4

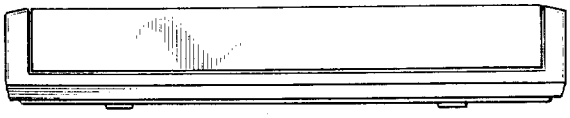

Fig. 3

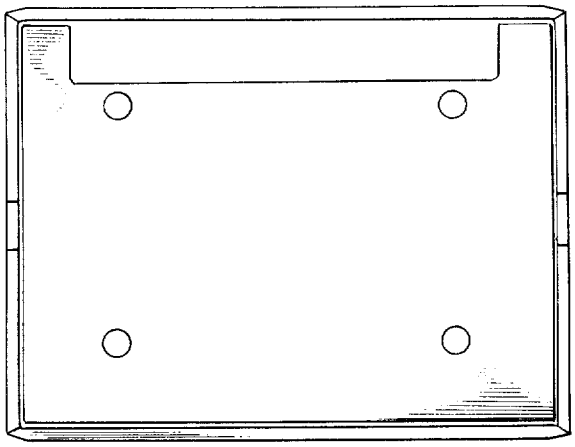

Fig. 5