United States Patent [19]

Nakamura

[11] **Patent Number: Des. 299,140**

[45] **Date of Patent: ** Dec. 27, 1988**

[54] **CURSOR CONTROL FOR COMPUTER DISPLAY**

[75] Inventor: **Fumio Nakamura**, Tokyo, Japan

[73] Assignee: **Hal Laboratory, Inc.**, Tokyo, Japan

[**] Term: **14 Years**

[21] Appl. No.: **803,989**

[22] Filed: **Nov. 8, 1985**

[30] **Foreign Application Priority Data**

May 24, 1985 [JP] Japan 60-21379

[52] **U.S. Cl.** **D14/114**

[58] **Field of Search** ..... D14/100, 106, 107, 114, D14/115; 340/365 R, 700, 706, 709, 710, 711; 74/471 XY; 178/18; 200/5 R, 5 A, 6 R, 6 A; 273/148 B; D21/48; D13/12, 32, 38

[56] **References Cited**

U.S. PATENT DOCUMENTS

D. 291,318	8/1987	Kim	D14/114
4,469,330	9/1984	Asher	340/365 R X
4,488,017	12/1984	Lee	200/6 A X
4,538,476	9/1985	Luque	273/148 B X

Primary Examiner—Susan J. Lucas

Attorney, Agent, or Firm—Flynn, Thiel, Boutell & Tanis

[57] **CLAIM**

The ornamental design for a cursor control for computer display, as shown and described.

DESCRIPTION

FIG. **1** is a top, front perspective view of a cursor control for computer display showing my new design;

FIG. **2** is a top plan view thereof on a reduced scale;

FIG. **3** is a front elevational view thereof on a reduced scale;

FIG. **4** is a bottom plan view thereof on a reduced scale;

FIG. **5** is a rear elevational view thereof on a reduced scale;

FIG. **6** is a right hand side elevational view thereof on a reduced scale;

FIG. **7** is a left hand side elevational view thereof on a reduced scale;

FIG. **8** is a top, front perspective view thereof on a greatly reduced scale, the display and computer being shown in broken lines for illustrative purposes only.

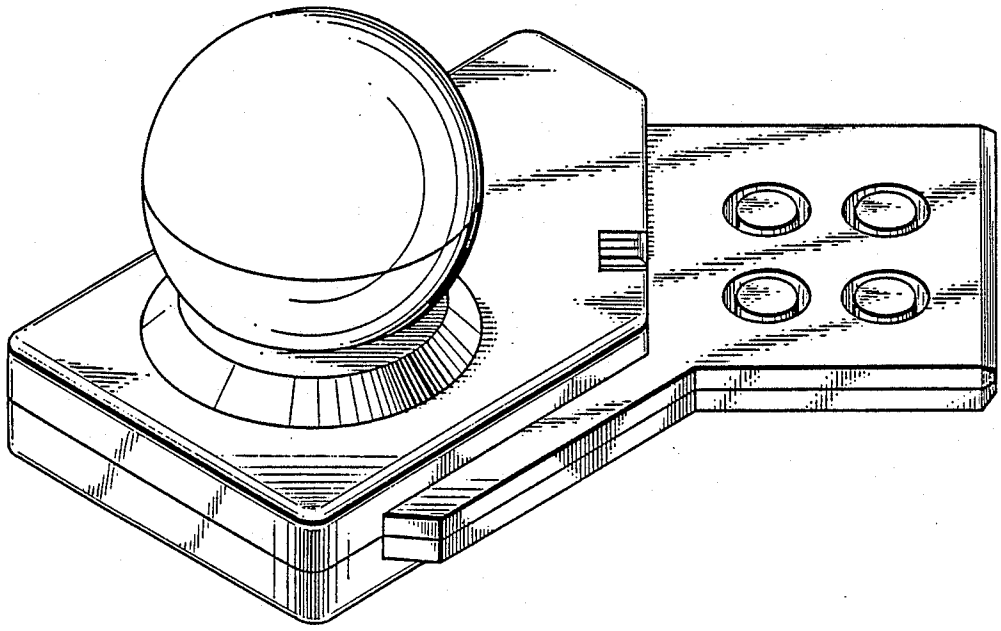

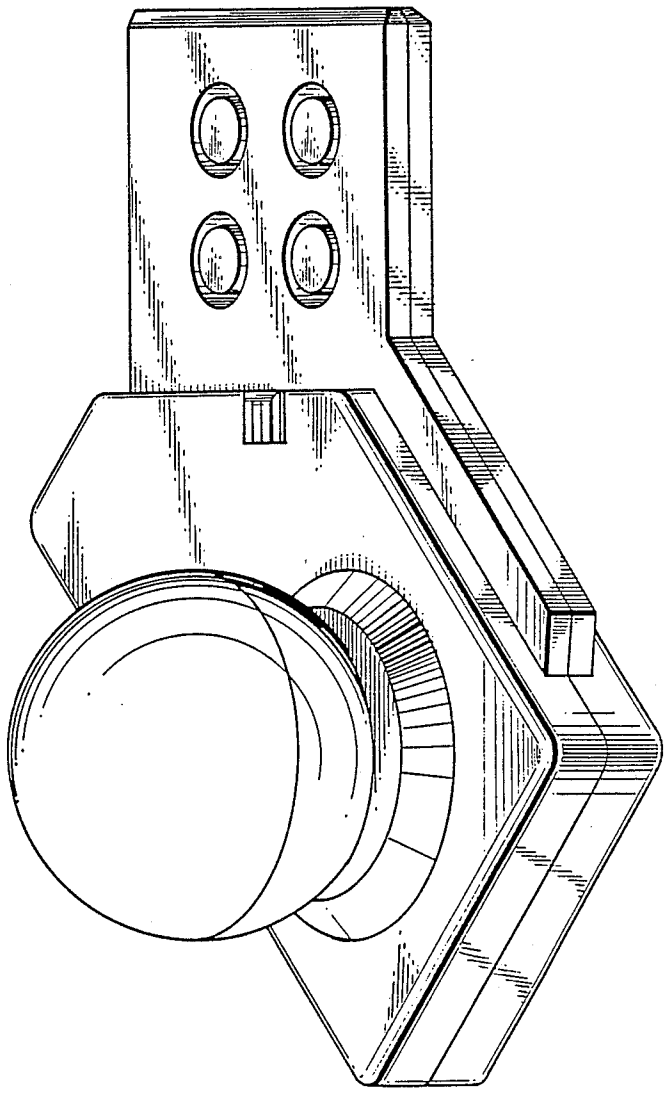

FIG. 1

FIG. 2

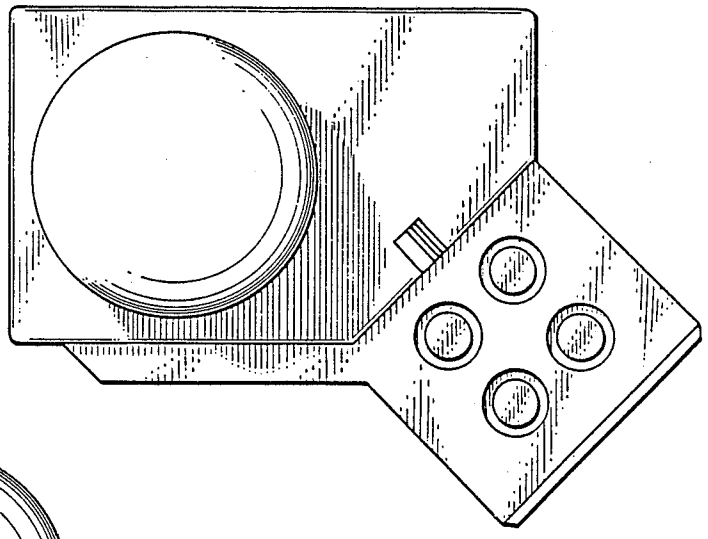

FIG. 3

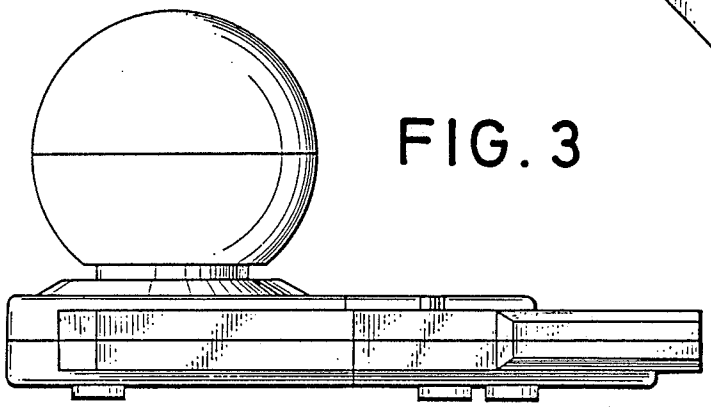

FIG. 4

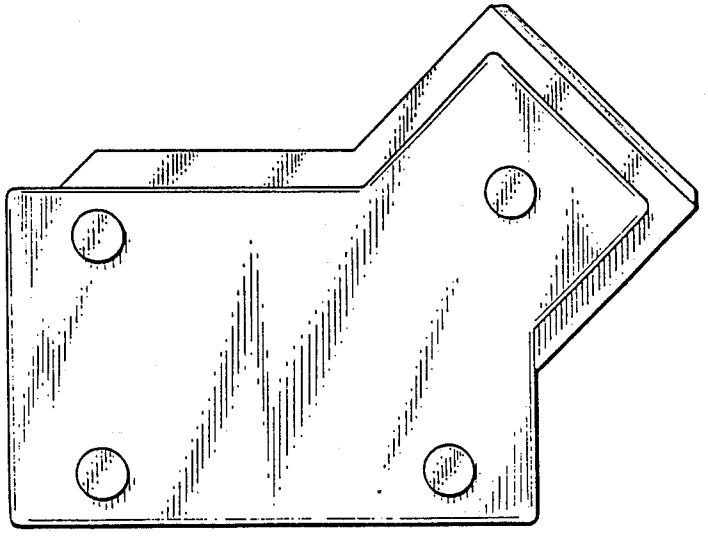

FIG. 5

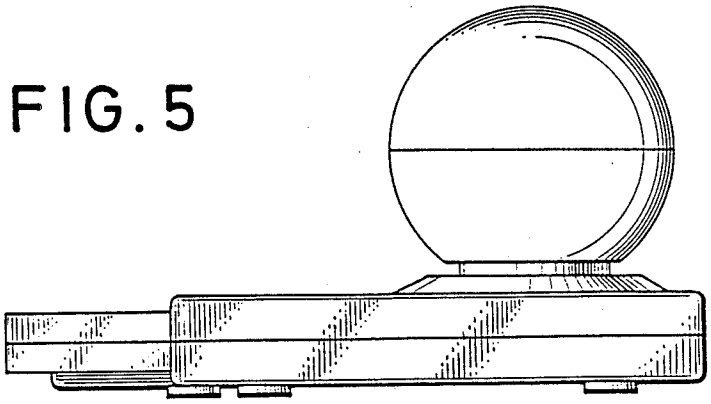

FIG. 6

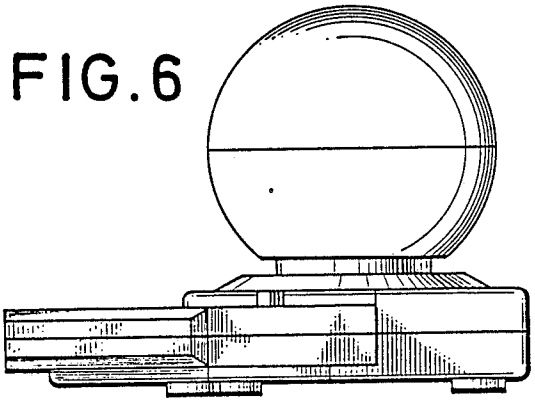

FIG. 7

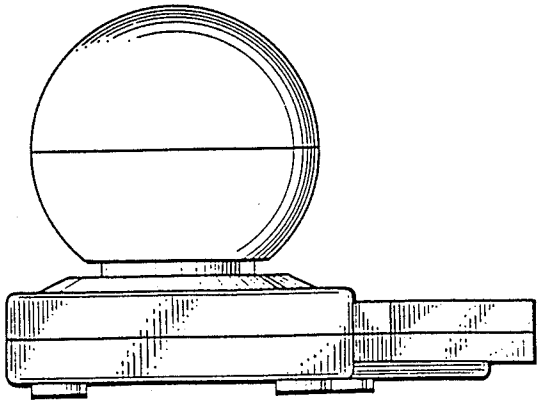

FIG. 8

