O. JUNGGREN.

COMBINED THRUST AND GUIDE BEARING.

APPLICATION FILED MAR. 10, 1906.

974,392. Patented Nov. 1, 1910.

2 SHEETS—SHEET 1.

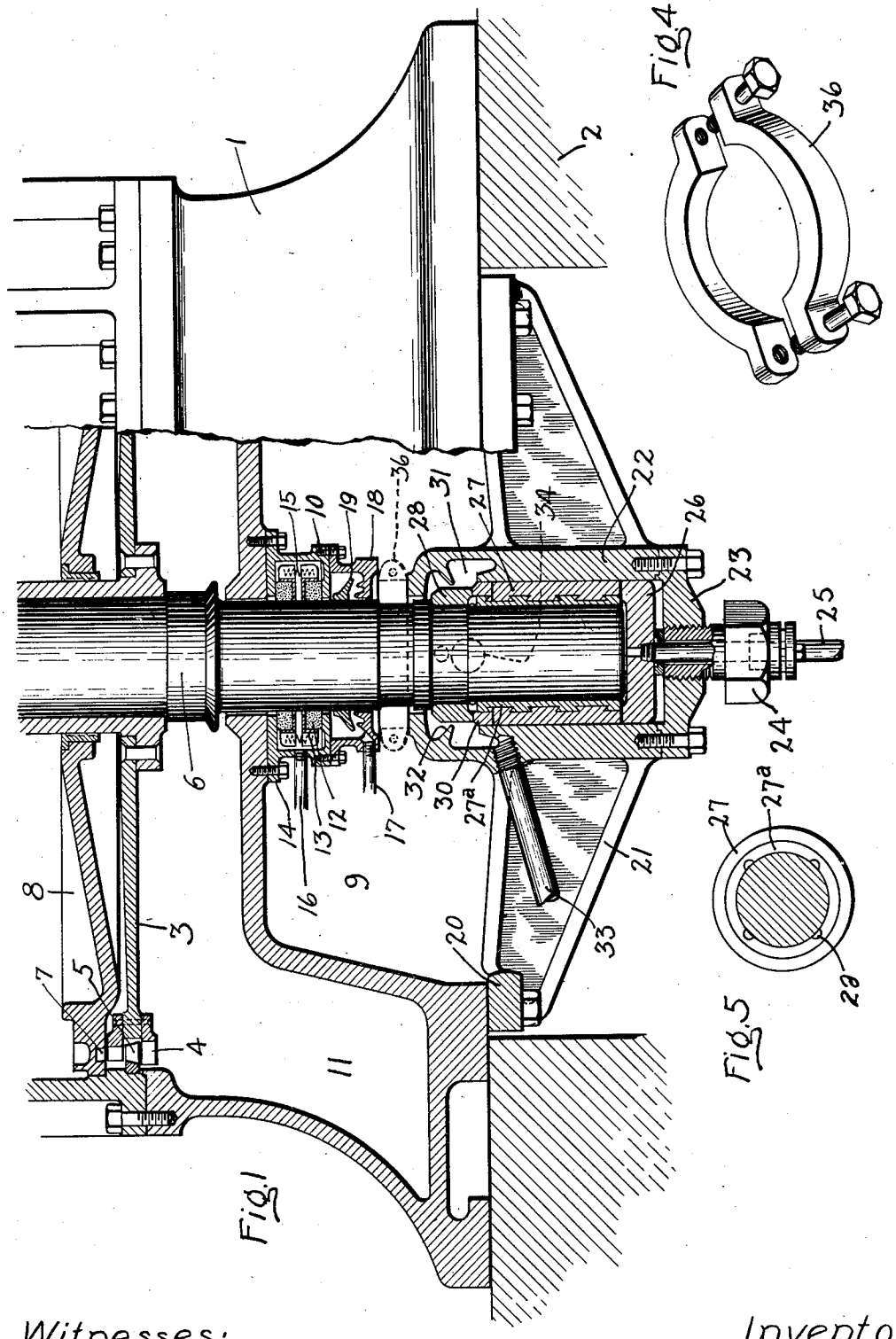

Fig. 1

Fig. 4

Fig. 5

Witnesses:
Lloyd C. Bush
Alex F. Macdonald.

Inventor:
Oscar Junggren.
By Albert G. Davis
Atty.

O. JUNGGREN.

COMBINED THRUST AND GUIDE BEARING.

APPLICATION FILED MAR. 10, 1906.

974,392. Patented Nov. 1, 1910.

2 SHEETS—SHEET 2.

Fig. 3

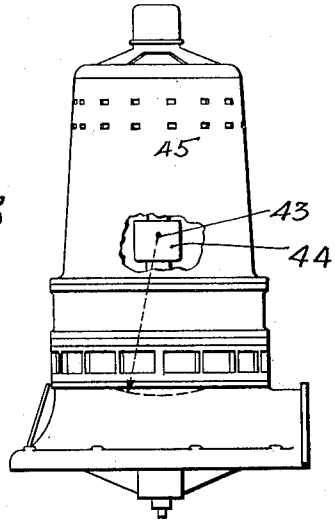

Fig. 2

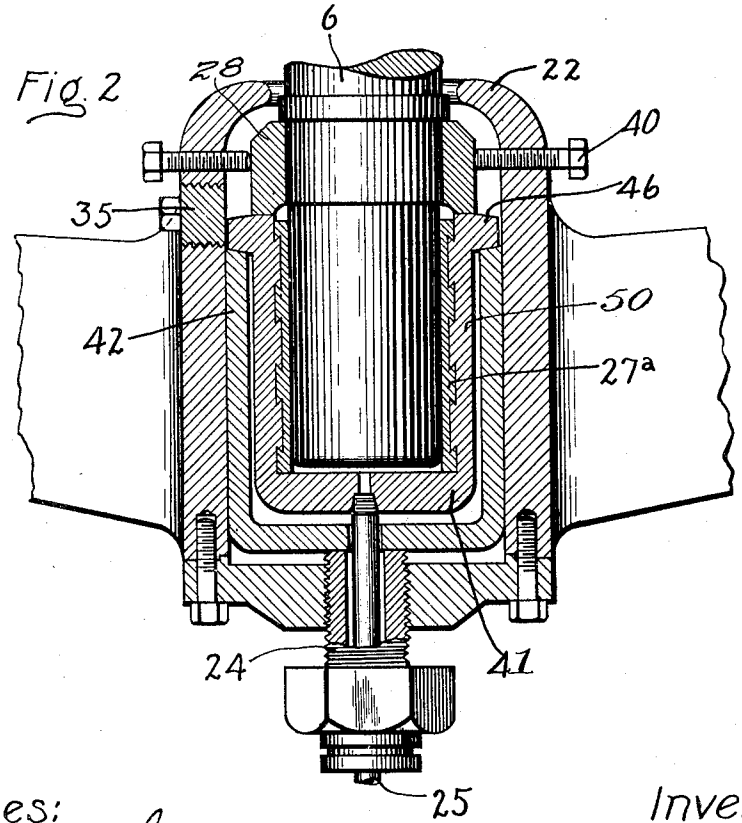

Witnesses:
Lloyd C. Bush
Alex F. Macdonald.

Inventor:
Oscar Junggren,
By Albert G. Davis
Att'y.

UNITED STATES PATENT OFFICE.

OSCAR JUNGGREN, OF SCHENECTADY, NEW YORK, ASSIGNOR TO GENERAL ELECTRIC COMPANY, A CORPORATION OF NEW YORK.

COMBINED THRUST AND GUIDE BEARING.

974,392. Specification of Letters Patent. **Patented Nov. 1, 1910.**

Application filed March 10, 1906. Serial No. 305,234.

To all whom it may concern:

Be it known that I, OSCAR JUNGGREN, a citizen of the United States, residing at Schenectady, county of Schenectady, State of New York, have invented certain new and useful Improvements in Combined Thrust and Guide Bearings, of which the following is a specification.

In the operation of vertical shaft apparatus, and particularly of elastic-fluid turbines, it is of the utmost importance to provide a step- or thrust-bearing which will maintain the shaft and its attached parts in a given vertical position, and a guide-bearing which will accurately hold the shaft against lateral movement, and this with a minimum clearance between the shaft and said guide-bearing. In elastic-fluid turbines temperature changes affect the relation of the parts and in the construction of the bearings therefor this forms an important consideration, as does accessibility of the parts.

The present invention relates to bearings of the character described and has for its object to improve their construction and arrangement, minimize the effects of temperature changes and increase their accessibility.

Other features will be referred to hereinafter.

In the accompanying drawing, which is illustrative of the invention, Figure 1 is a vertical section of a combined step- and guide-bearing particularly intended for an elastic-fluid turbine; Fig. 2 is a slight modification of the bearing construction; Fig. 3 is a side view of a vertical-shaft turbine; Fig. 4 is a perspective view of a split collar used when it is desired to support the weight of the revolving structure and remove the bearings; and Fig. 5 is a plan view of the guide-bearing sleeve and lining.

1 represents the casing of a turbine of a jet or other type, which is supported by a suitable foundation 2 having a central opening communicating with one side to permit entrance and exit. The casing may with advantage be divided in a horizontal plane into a chambered base arranged to receive the exhaust steam or other motive fluid, and an upper portion which surrounds the bucket wheel or wheels 3. The buckets 4 are mounted in rows on the periphery, and between the rows are intermediate buckets 5. The moving and stationary buckets are separated by small clearances, such, for example, as .05 of an inch. Such being the case, it follows that the shaft 6 and its attached parts must be accurately kept in their proper position. Fluid is discharged against the buckets by nozzles or other fluid-discharging devices 7, the latter being carried by a diaphragm 8 or other support. As many stages of expansion of the motive fluid may be provided as are desired.

Experience has demonstrated that the bottom wall of the base of the casing will change its position somewhat with changes in vacuum. For example, it may rise or fall to a slight extent with temperature changes caused by changes in vacuum. The base is provided with an inset 9 of suitable shape and size to enable a person to get at the packing 10 and other parts. The inset shown is substantially rectangular in shape and rises vertically by an amount sufficient to provide room for the packing and other parts and also to permit of a man working inside of it.

The packing is arranged to prevent air from leaking into the exhaust chamber 11 when the turbine is running condensing and to prevent the steam from escaping when operating non-condensing. The packing rings 12 may with advantage be made of carbon. Each is provided with a holder 13 and all are inclosed in a suitable casing 14 bolted to the under side of the inset. Springs 15 are provided to force the packing rings apart. Steam or other fluid is admitted to the casing 14 by the pipe 16, and the exhaust is carried off by the pipe 17. Situated below the packing-containing casing is a second casing 18 surrounding a ring 19 arranged to discharge the condensed water or other liquid from the packing outwardly and prevent it from working down and mingling with the oil exhausting from the step- and guide-bearings.

The bearings are supported by a spider having an outer ring 20 and radially extending ribs 21, four being provided in the present illustration, united with the hub 22. The ring is bolted to the base of the turbine at a point remote from the axis of the shaft, in the present case more than half way between the axis and the periphery. The object of this arrangement is to minimize the effects of temperature changes, since it is

only the central part of the base that is particularly subject to changes caused by changes in temperature. It is to be noted that the weight of the shaft and its attached and supporting parts is supported at such a distance from the axis of the machine that better alinement can be maintained than where the point of attachment is close to the center, and the danger due to errors is reduced to a minimum. The larger the diameter of the spider the less will be the trouble due to defective workmanship. Again, owing to the open construction the air is free to circulate around the parts and keep them cool. In some cases it may be desirable to omit the ring 20, in which case the ribs 21 may be secured directly to the base of the machine. The ribs may terminate as shown or be extended through slots in the foundation.

The hub of the spider is bored out cylindrically and is open at the top and bottom, the latter being closed when the parts are assembled by a removable head 23. The head is bored centrally to receive the adjusting screw 24, and is secured by bolts located near the periphery. The adjusting screw is hollow to receive the pipe 25 conveying lubricant from a suitable source of pressure, such, for example, as a pump, accumulator or city water main. It is preferable to use oil, however, as the lubricating medium on account of the guide-bearing.

Situated inside of the bore of the spider is a plate 26 the position of which is determined by the adjusting screw. In the upper side of the plate is a chamber to receive lubricant from the pipe 25. The plate sustains the weight of the revolving structure through the medium of the fluid pressure, the guide-bearing sleeve 27 and upper bearing block 28, the latter being keyed or otherwise secured to the shaft and seated against a shoulder formed thereon. The area of the chamber in the plate 26 should be smaller than the area of the upper block so as to prevent the sleeve from being lifted by fluid under pressure. Fluid should not be permitted to leak between the plate and the sleeve and find its way to the exhaust. Inside of the sleeve is a babbitt lining 27^a having vertically disposed grooves 29, Fig. 5, to convey lubricant from the chamber in the plate to the upper block. These grooves should have a cross-sectional area the same or substantially the same as that of the bore of the pipe 25 to insure the flow of the lubricant. In addition to conveying lubricant from the lower to the upper end of the bearing, these grooves serve to distribute it. The sleeve may be made in one piece or it may have a detachable upper end or ring 30, the object of the latter being to provide a thrust-bearing part which can be removed when injured or defective at a small expense. The detachable end or ring may with advantage be made of cast iron and also the thrust-block.

It will be seen that the weight of the shaft is supported at two points, one above and the other below the guide-bearing, assuming the supply of lubricant is on. The liquid in the chamber in the plate is under such pressure that it supports a greater or lesser portion of the weight. As shown, it supports about 80 per cent. of the weight and the thrust-block the remainder. I have used these figures merely as an illustration, it being understood that the relation may be changed to suit the requirements. The thrust block, in addition to supporting its share of the weight, acts as a throttle-valve to regulate the discharge of lubricant. A very small increase in the space between the block and the sleeve will greatly increase the amount of lubricant which can pass. Conversely, a small decrease will greatly decrease the amount of lubricant that passes. It is to be understood in this connection that the lubricant passes in a thin film between the surfaces.

It will be noted that the lower end of the shaft is so disposed that it cannot contact with the plate 26, hence no chips due to cutting can pass up through and ruin the guide-bearing and score the shaft. It is also to be noted that the guide-bearing is lubricated by fluid under the same pressure as that admitted to the step as distinguished from those cases where the guide is lubricated by the exhaust from the step and at atmospheric pressure, or substantially so. Another important feature in this construction resides in the fact that if the supply of lubricant fails and the thrust-bearing surfaces rub, the chips cannot get into the guide bearing, and the latter will be well lubricated because of the oil trapped in the grooves and between the shaft and lining. This means that only the thrust-block and the removable part of the sleeve will be injured, instead of both step and guide, as frequently happens at present.

The vertical position of the sleeve 27 and through it the shaft and thrust-block 28 is adjusted by the plate 26 and the adjusting screw. Adjusting the shaft also adjusts the clearance between the buckets, or between the buckets and the nozzles or other fluid-discharging devices, or both.

The hub or inclosure is extended above the thrust-block to form a lubricant-receiving chamber 31. Inside of the hub is a circular and downwardly extending rib 32 to prevent lubricant from creeping along the shaft to the outside of the shell. To the chamber is connected an exhaust pipe 33.

Formed in the inclosure at a point in line with the bottom of the upper block 28 are one or more peep-holes 34, Figs. 1 and 2,

large enough to receive an incandescent lamp and normally closed by a screw-threaded plug 35. The top of the shell is finished to form a support when it is desired to lower the bearings.

36, Fig. 4, represents a detachable collar adapted to be mounted on the shaft and rest on top of the spider to sustain the weight of the revolving element. A shoulder is turned on the shaft for engagement with the collar.

By mounting the collar in place, lowering the block 26 and the sleeve 27, and removing the plug and inserting a lamp, the condition of the surfaces can be observed without disturbing the alinement, and this in a comparatively short time. The space within the inset and around the bearings is great enough to enable a workman to get in on each side of the bearings and work. Since the pressure of the lubricant in the chamber is that of the atmosphere, it is possible to remove a plug and inspect the bearing while in operation.

If it be desired to remove the parts, the shaft is first blocked up by the collar, then the head 23 is removed and the parts lowered. Since the thrust-block 28 is smaller in diameter than the bore of the hub of the spider, it can also be lowered. By this means the bearings can be worked on without disturbing the turbine parts or the upper bearing or bearings. By using a hard babbitt lining for the guide, it will stay to dimension. I am able by the construction described to use one fluid-pressure system to lubricate all of the bearings, suitable baffling devices being provided for the upper bearing or bearings to reduce the pressure, and also actuate the valve mechanism where hydraulic means are employed.

In an arrangement of this kind it is important to ascertain with exactness the clearance between the shaft and the guide-bearing. To do this one or more screws 40 are provided, usually two, one on each side of the upper block, and by screwing it or them in until it or they strike the block the clearance can be determined. When making these measurements fluid under pressure should be admitted to the bearings, the shaft being stationary. When the pressure is on the step-bearing, no trouble is experienced in moving the shaft from side to side in the guide-bearing.

In Fig. 2 is shown a slight modification wherein provision is made for the self-alining of the bearings. The spider is constructed as before except that the bore is somewhat larger. 50 represents the sleeve with the babbitt lining, and the lower end is or may be closed by a head 41 formed integral therewith. Surrounding the sleeve is a cylindrical support 42 having a base formed integral therewith or separate, as desired. This support is adjusted vertically by the adjusting screw 24. The adjusting screw and the base of the support 42 are bored out to receive the pipe 25, the upper end of which is threaded to the base of the sleeve. Between the pipe and the support 42 and adjusting screw is sufficient clearance to permit the bearings to aline themselves.

The upper end of the support 42 is finished to form a portion of a sphere, the center 43 of which is struck from a suitable point. By preference it would be located at about the center of the machine. As shown in Fig. 3 it is located at the shaft axis about midway of the self alining guide-bearing 44. In this figure the turbine is located at the lower end of the shaft and a generator 45 at the upper end, the guide-bearing being between. On the sleeve 50 is a circumferential shoulder 46 which has its under surface finished from the same center as the end of the support. Between the sides of the support and the sleeve is sufficient space to permit the sleeve to move slightly for the purpose of alinement. The upper end of the sleeve is solid as distinguished from the removable end of Fig. 1. The thrust-block 28 is secured as before.

I have described my improved bearing as applied to a vertical-shaft machine, but it is within the scope of my invention to use it in connection with a horizontal-shaft machine wherein there exists a heavy longitudinal thrust. The terms "above" and "below" should then be interpreted as "left" and "right," as the case may be. The guide-bearing in this event then becomes a bearing which supports the weight of the shaft and attached parts.

In accordance with the provisions of the patent statutes, I have described the principle of operation of my invention, together with the apparatus which I now consider to represent the best embodiment thereof; but I desire to have it understood that the apparatus shown is only illustrative, and that the invention can be carried out by other means.

What I claim as new, and desire to secure by Letters Patent of the United States, is,—

1. In combination, a shaft one of whose ends is exposed to the effects of lubricant under pressure, which pressure partially supports it, a thrust block mounted on the shaft at some distance from said end, a coöperating block which when the bearing is in use is separated from the one on the shaft by a film of lubricant, a guide bearing sleeve that surrounds the shaft between the end and the thrust block, a support for one of the thrust blocks and the sleeve, and means for supplying lubricant under pressure to the end of the shaft from which it flows through the guide-bearing and escapes in a film between the thrust blocks.

2. In combination, a shaft, a thrust-bear-

ing comprising movable and stationary blocks which are separated by a film only of lubricant when the bearing is in operation, a guide-bearing sleeve located below the thrust-bearing, a means for discharging high-pressure lubricant through the guide-bearing to the thrust-bearing so that the guide-bearing will always be lubricated and chips caused by cutting of the thrust-bearing blocks will be prevented from entering the guide-bearing, and a casing common to the bearings which contains a chamber working at atmospheric pressure which receives the lubricant after it exhausts from the thrust-bearing.

3. In combination, a shaft, a thrust-bearing, a guide-bearing located below the thrust-bearing, a plate for taking the longitudinal thrust on the guide-bearing and through it that on the thrust-bearing, and means for admitting fluid under pressure between the end of the shaft and the plate and permitting it to flow through the guide-bearing and discharge through the thrust-bearing.

4. In combination, a shaft, a guide-bearing therefor, one end of which acts as a part of a thrust-bearing, a thrust-bearing block carried by the shaft and coöperating with the said end of the guide-bearing, a closure for the end of the shaft, and a means for discharging lubricant under high pressure between the end of the shaft and said closure and causing it to flow axially through the guide-bearing at full pressure and discharge between the upper end of the guide-bearing and the block on the shaft.

5. In combination, a shaft, a guide-bearing therefor, a removable end for the guide-bearing, a bearing-block carried by the shaft and coöperating with said end to form a thrust-bearing to resist the thrust of the shaft, and a means for discharging lubricant to the guide-bearing from which it flows between the parts of the thrust-bearing.

6. In combination, a shaft, a collar thereon, a bearing block seated thereon, a guide-bearing below said block, one end of which coöperates with said block to take up thrust, an inclosure for the bearings, an adjusting plate within the inclosure which engages only with the guide-bearing, and a means for discharging high-pressure lubricant between said plate and the end of the shaft.

7. In combination, a shaft, a support which is subject to changes in position by reason of temperature variations, a spider which is attached to the support at a point remote from the center to minimize the effects of said variations, guide- and thrust-bearings carried by the spider, and means for supplying lubricant to one bearing from which it flows through the other bearing.

8. In combination, a shaft, a support which is subject to changes by reason of temperature variations, a spider which is attached to the support at a point remote from the center to minimize the effects of said variations, guide- and thrust-bearings carried by the spider, the thrust-bearing being located between the guide-bearing and the support, and a means for supplying lubricant to the end of the shaft at high pressure to partially take up the thrust and cause it to flow at high pressure through the guide-bearing and discharge through the thrust-bearing to take up the remainder of the thrust.

9. In combination, a shaft, a support which is subject to changes by reason of temperature variations, a spider which is attached to the support at a point remote from the center to minimize the effects of said variations and is provided with a hub, a bearing sleeve surrounding the shaft and located within the bore of the hub, a plate within the bore which adjusts the bearing longitudinally, a thrust bearing block carried by the shaft and coöperating with one end of the bearing sleeve, and means for discharging lubricant under high pressure between the plate and the end of the shaft and causing it to flow through the bearing and discharge between the thrust-block and the said end of the bearing.

10. In combination, a shaft, a support which is subject to changes by reason of temperature variations, a spider which is attached to the support at a point remote from the center to minimize the effects of said variations and is provided with a hub which has an open-ended bore to receive the shaft, a guide-bearing sleeve located within the bore and having passages for lubricant, a plate engaging the sleeve and out of contact with the end of the shaft, a head for closing one end of the bore of the hub, an adjusting screw carried by the head and engaging the plate, a block on the shaft, a stationary part coöperating therewith to form a thrust-bearing, and a conduit which passes through the adjusting screw and discharges lubricant between the plate and the end of the shaft, which lubricant is conveyed by said passages through the guide bearing and discharges between the surfaces of the thrust-bearing.

11. In combination, a support having an inset, a spider extending across the inset and provided with openings to permit access to the parts between it and the adjacent wall of the inset, a thrust- and a guide-bearing carried by the spider, a means for supplying lubricant under pressure to the end of the shaft and causing it to flow through the guide-bearing and be discharged between the parts of the thrust-bearing, and a means for collecting and discharging the exhaust lubricant.

12. In combination, a support having an inset, a spider extending across the inset having a hub which is separated axially

from the transverse wall of the inset, a thrust-block mounted on the shaft, a coöperating bearing block carried by the spider hub on the end adjacent to the inset, a guide-bearing carried by the hub on the side away from the inset, an adjustable plate engaging the guide-bearing but out of contact with the shaft, and a conduit for supplying lubricant to the space between the shaft and the plate.

13. In combination, a shaft, a guide bearing therefor, a thrust bearing mounted above the guide bearing, an inclosure for the bearings having a peep hole in line with the plane of separation of the parts of the thrust bearing and at a point where the lubricant pressure is practically atmospheric, and means for conveying lubricant under pressure to the guide bearing from which it exhausts under pressure and flows between the surfaces of the thrust bearing to support weight of the shaft.

14. In combination, a shaft, a guide-bearing therefor, a thrust-bearing, an inclosure for the bearings, means for discharging lubricant under pressure to the bearings, and means extending through the inclosure whereby the clearance between the shaft and the guide-bearing may be determined without disturbing the inclosure.

15. In combination, a shaft, a guide-bearing therefor, a thrust-bearing, an inclosure for the bearings, means for discharging lubricant under pressure to the bearings, and a screw-threaded means extending through the inclosure and engaging the thrust-block on the shaft for determining the clearance between the shaft and the guide-bearing.

16. In combination, a shaft, a thrust bearing therefor, a guide bearing below said bearing, a plate which supports the guide bearing and contains a chamber, the area of the chamber being less than that of the thrust bearing to prevent the guide bearing from being lifted, and a conduit for supplying lubricant under pressure to the chamber and the bearings.

17. In combination, a shaft, a thrust bearing, a guide bearing below the thrust bearing, a step-bearing below the guide bearing, and a conduit which supplies lubricant to the step-bearing under sufficient pressure to largely support the weight of the shaft and which also supplies lubricant under pressure to the guide and to the thrust bearing.

18. In combination, a shaft, thrust and step bearings therefor, a guide bearing between said bearings, the said bearings receiving lubricant in series relation and at substantially the same pressure, and a conduit for supplying lubricant under a pressure sufficient to support the weight of the shaft.

19. In combination, a shaft, a thrust bearing comprising an upper and a lower block, a guide bearing the upper end of which supports the weight on said lower block, an inclosure for the guide bearing the bore of which is of greater diameter than the thrust bearing blocks so that the blocks can be removed through it, and a means for closing the lower end of the bore and supporting the parts.

20. A combined thrust and guide bearing for a vertical shaft having a guiding surface situated below the thrust bearing surface, and means for causing lubricant to pass upward first over the guiding surfaces and then between the thrust bearing surfaces.

In witness whereof, I have hereunto set my hand this 9th day of March, 1906.

OSCAR JUNGGREN.

Witnesses:
BENJAMIN B. HULL,
MARGARET E. WOOLLEY.