Jan. 18, 1966 C. F. SMITH 3,229,312

JET STREAMER FOR WATER VEHICLES

Filed April 26, 1965 2 Sheets-Sheet 1

Fig. 1

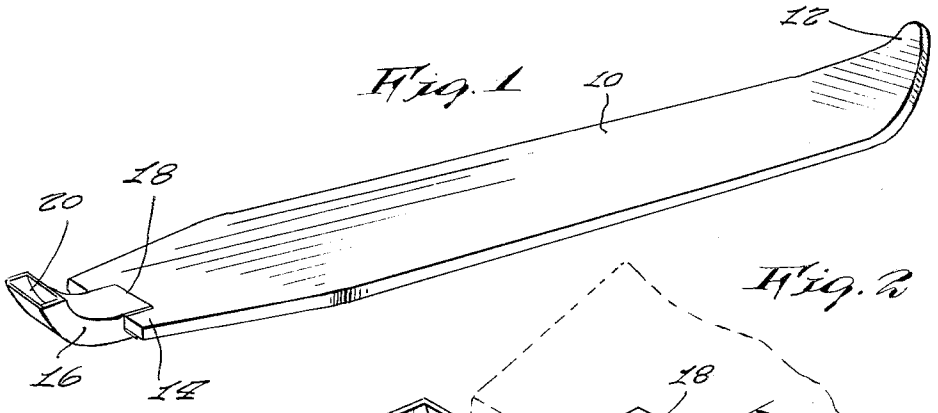

Fig. 2

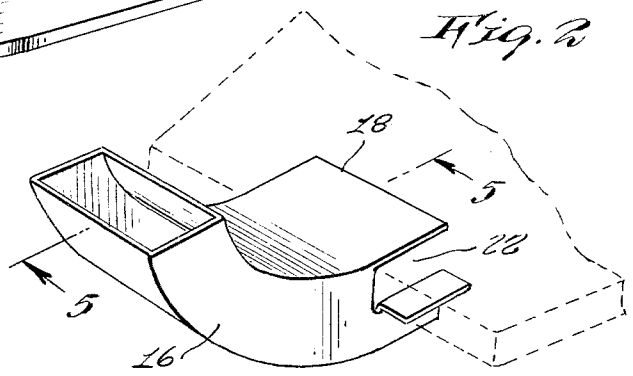

Fig. 3

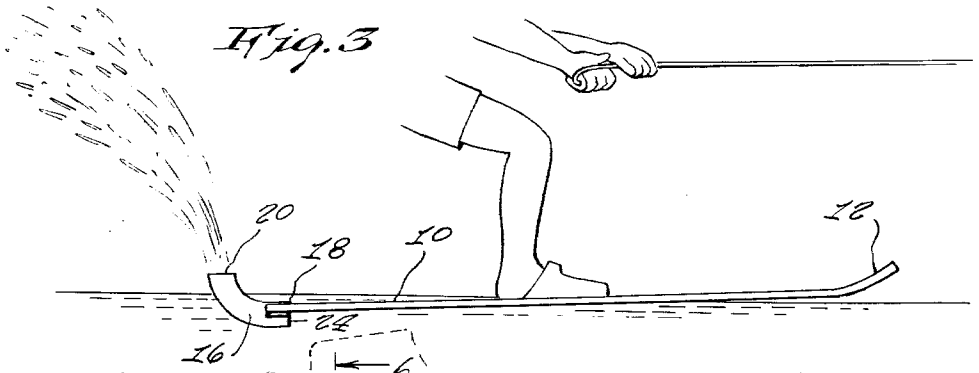

Fig. 4

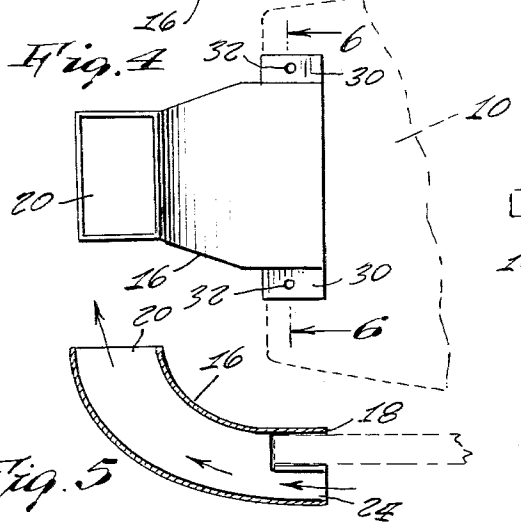

Fig. 6

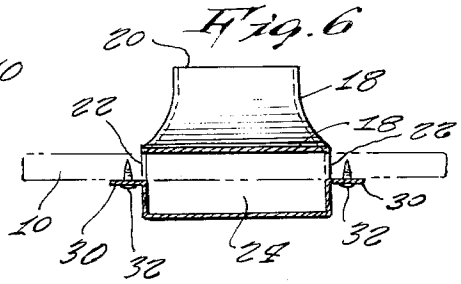

INVENTOR.

C. FRANK SMITH

Fig. 5

Jan. 18, 1966 C. F. SMITH 3,229,312

JET STREAMER FOR WATER VEHICLES

Filed April 26, 1965 2 Sheets-Sheet 2

Fig. 7

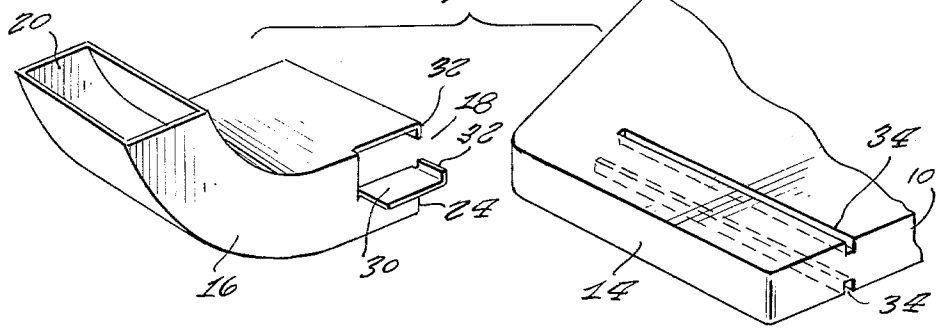

Fig. 8

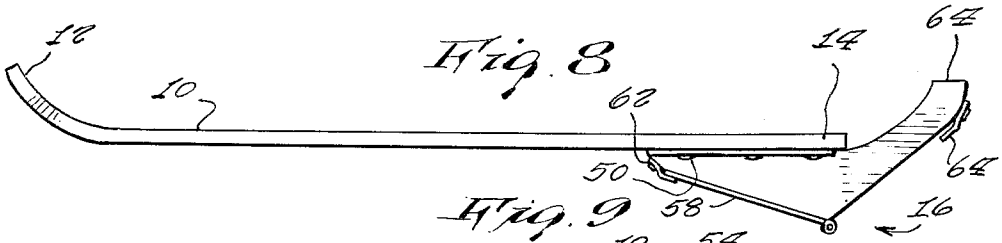

Fig. 9

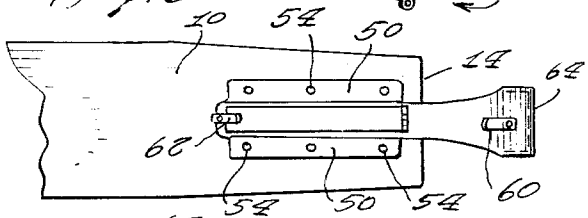

Fig. 10

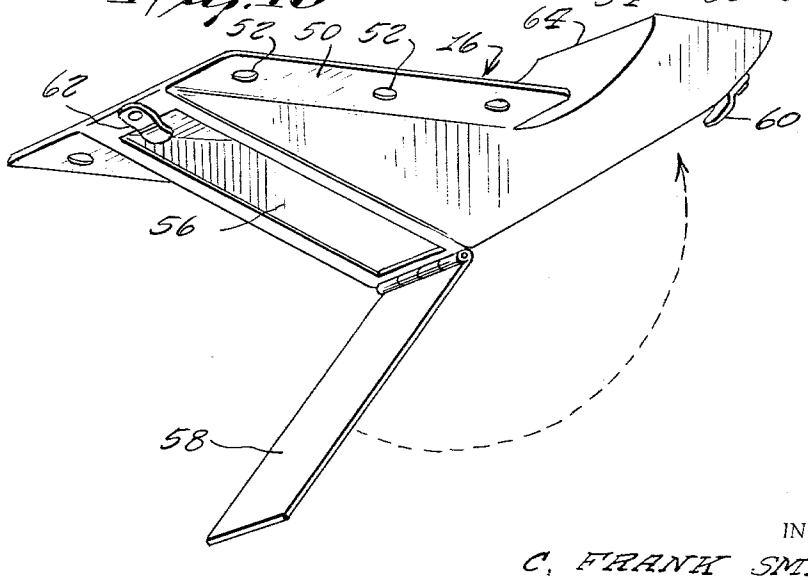

INVENTOR.

C. FRANK SMITH

United States Patent Office

3,229,312

Patented Jan. 18, 1966

1

3,229,312

JET STREAMER FOR WATER VEHICLES

Charles Frank Smith, R.F.D. 3, Laconia, N.H.

Filed Apr. 26, 1965, Ser. No. 450,630

1 Claim. (Cl. 9—310)

My invention is directed toward attachments for water skis, boats and the like.

It is an object of my invention to provide a new and improved attachment of the character indicated which provides a backward and upward spray of water when attached to the rear of a water ski or boat.

Another object is to provide a new and improved attachment of the character indicated which can be easily attached to and removed from a water ski or boat.

Still another object is to provide a new and improved attachment of the character indicated which can be manufactured easily and inexpensively.

All of the foregoing and still further objects and advantages of my invention will now be explained with reference both to this specification and to the accompanying drawings wherein:

FIG. 1 is a perspective view of one form of my invention as attached to a water ski;

FIG. 2 is an enlarged detail view of the invention of FIG. 1;

FIG. 3 is a side view of the ski of FIG. 1 in use;

FIG. 4 is a top view of a modification of my invention;

FIG. 5 is a cross section through 5—5 of FIG. 2;

FIG. 6 is a cross section through 6—6 of FIG. 4;

FIG. 7 is an exploded view of a second modification of my invention;

FIG. 8 is a side view of a third modification of my invention;

FIG. 9 is a bottom view of the modification of FIG. 8;

FIG. 10 is a perspective view of the modification of FIG. 8.

Referring now to FIGS. 1–3 and 5, there is shown a flat thin elongated water ski **10** having an upward curved pointed front end **12** and a flat horizontal inward tapering rear end **14**. Further there is shown a hollow metal member **16** open at both ends, the bottom end **18** extending horizontally and forward, the top end **20** extending upward and rearward. End **18** has slotted sides **22** arranged to receive end **14** of the ski in friction tight engagement and having a bottom opening or throat **24** extending horizontally below the flat bottom surface of the ski. When the ski is pulled forward while resting on the surface of water **26**, water flows through the throat and the body of the member and is discharged from end **20** in the form of a jet spray. As can be seen from the drawings, the cross-sectional area of the discharge end **20** is larger than the cross-sectional area of the inlet **24**.

Alternatively as shown in FIGS. 4 and 6, sides **22** can have horizontally extending flaps **30** having holes

2

through which screws or nails **32** can extend upward and into the bottom surface of the ski to form a permanent attachment.

As a further alternative, end **18** and flaps **30** can have lip portions **32** arranged to slide into upper and lower transverse grooves **34** in the water ski.

Finally as shown in FIGS. 8–10, member **16** can be so shaped as to act both as a tail fin and as a jet spray producer. To this end, the main body of the member is provided with a peripheral horizontal lip **50** having holes **52** and bearing against the bottom surface of the ski adjacent the rear end, member **16** being secured thereto by screws **54** extending upward through holes **52** into the bottom surface of the ski.

The bottom end **56** of the member slopes downward and away from the ski and is provided with a hinged door **58** which opens downward and away from the ski and can be held in open position by clip **60** as well as held in a closed position by clip **62**. The top end **64** of the member is always open and extends upward and away from the ski. When door **58** is closed, the device acts only as a tail fin; when door **58** is opened, a jet spray is produced as previously described while the device still functions as a tail fin.

While I have described my invention with particular reference to the drawings, my protection is to be limited only by the terms of the claim which follows.

I claim:

In combination with a water ski which is thin, elongated and extends essentially horizontally, said ski having a front end and a rear end, a jet producing hollow member open at both ends, one of said ends, extending essentially horizontally and adapted for engagement with the rear end of the ski in such manner as to form an inlet throat therebelow, the other end referred to as the discharge end extending upward and rearward behind the rear end of the ski whereby when the ski is dragged forward in water, water passes through said throat and is discharged from the other end in the form of a jet spray, said inlet throat having a cross-sectional inlet area which is less than the cross-sectional area of the discharge end, and wherein said one member end is provided with an upper lip and side bottom lips adapted for respective engagement with upper and lower transverse grooves in the top and bottom surfaces of said ski.

References Cited by the Examiner

UNITED STATES PATENTS

2,940,091	6/1960	Fifer	9—310
3,040,345	6/1962	Green et al.	9—310
3,089,157	5/1963	May	9—310

MILTON BUCHLER, *Primary Examiner.*

A. E. CORRIGAN, *Assistant Examiner.*