Oct. 6, 1964 C. A. SWARTZ 3,151,562

PUMP DEVICE

Filed April 25, 1962 2 Sheets-Sheet 1

FIG. 1

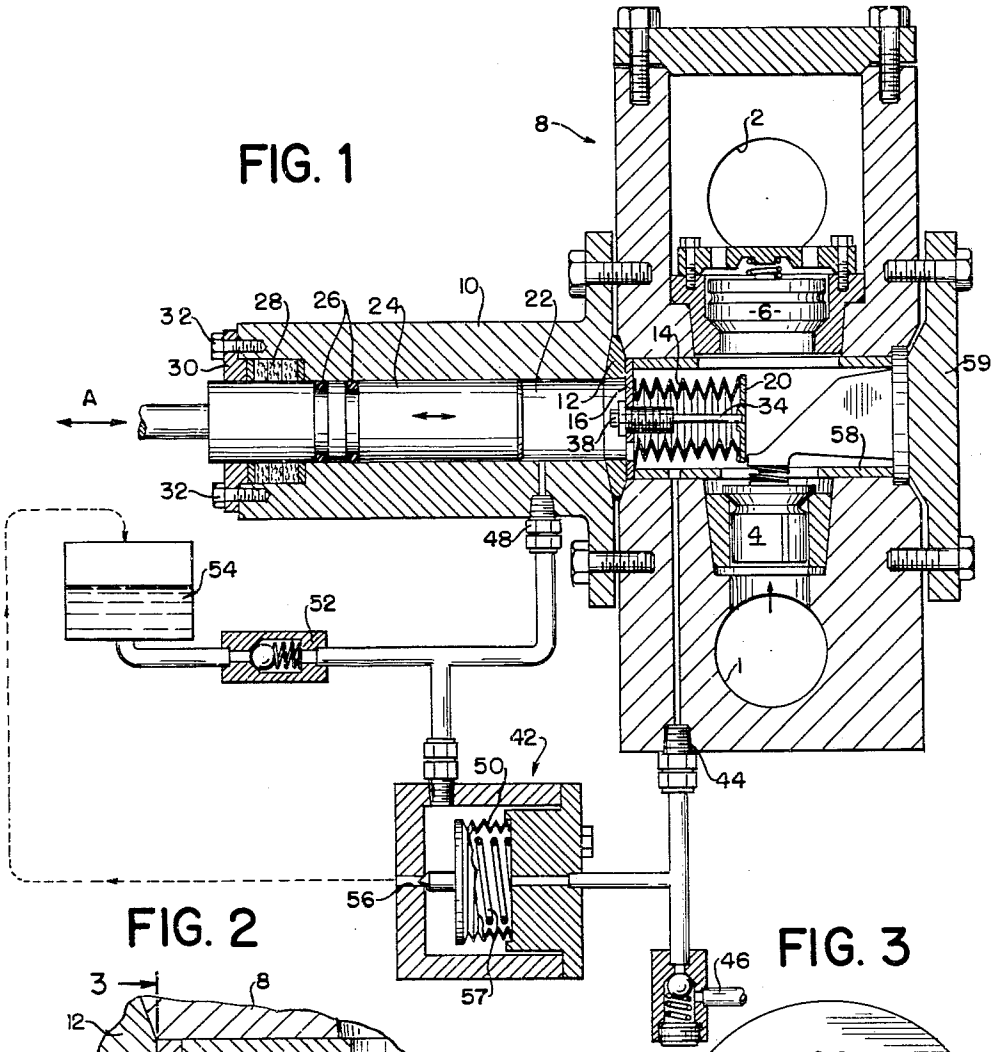

FIG. 2

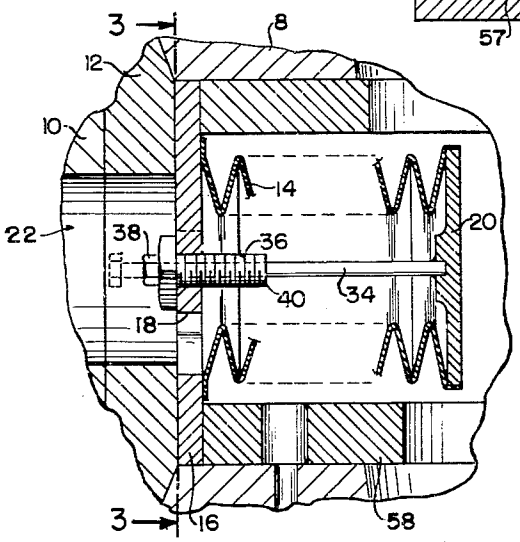

FIG. 3

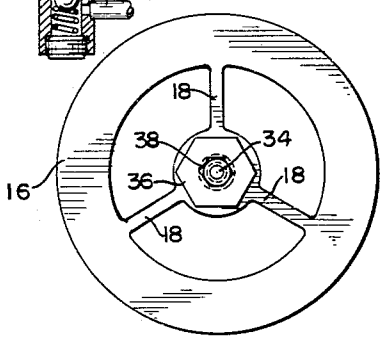

INVENTOR.
CHARLES A. SWARTZ

BY

Nolte & Nolte
ATTORNEYS

Oct. 6, 1964 C. A. SWARTZ 3,151,562

PUMP DEVICE

Filed April 25, 1962 2 Sheets-Sheet 2

FIG. 5

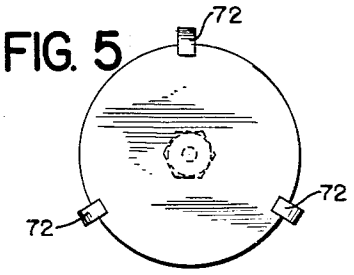

FIG. 4

FIG. 6

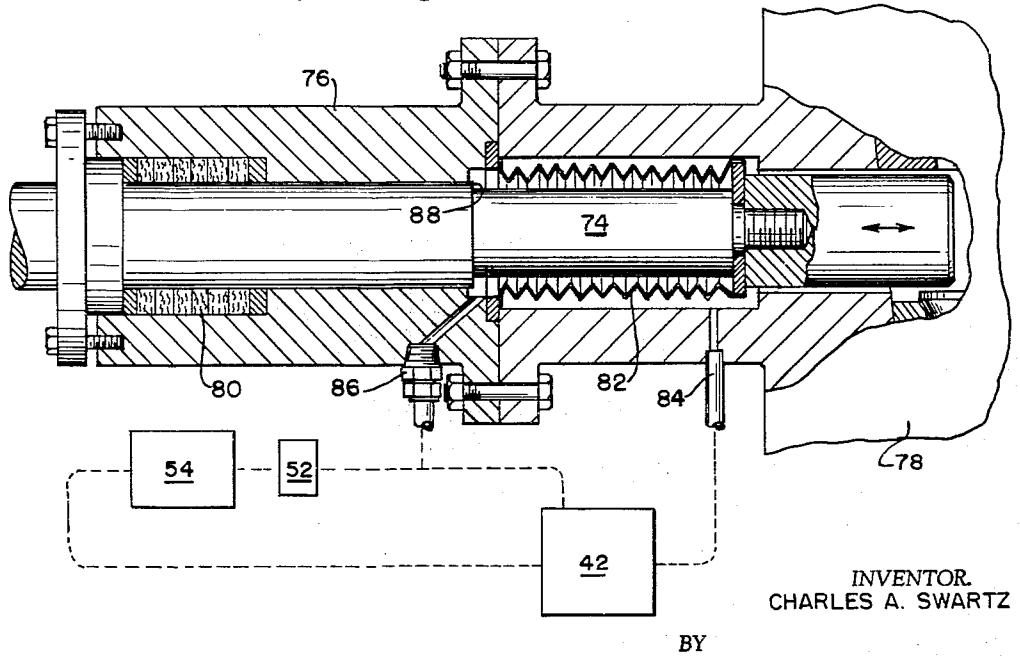

INVENTOR.
CHARLES A. SWARTZ

BY

Nolte & Nolte
ATTORNEYS

United States Patent Office 3,151,562 Patented Oct. 6, 1964

3,151,562

PUMP DEVICE

Charles A. Swartz, 1 Bronxville Road, Bronxville, N.Y.

Filed Apr. 25, 1962, Ser. No. 190,178
7 Claims. (Cl. 103—44)

This invention relates to positive displacement fluid pumps, and more particularly to an improvement in reciprocating pumps wherein the reciprocating member is separated from the liquid being pumped.

Pumps in which the reciprocating member of the pump acts through an intermediate separating member such as a diaphragm or a liquid surge column, or in combination a liquid surge column and a diaphragm, have been known generally in connection with the pumping of corrosive, toxic, or flammable liquids. While pumps using a diaphragm or bellows to separate the surge column and stuffing box from the liquid being pumped are well known, they are not adapted for the delivery of large required capacities, because of high cost and excessive maintenance requirements. Generally, the intermediate separating diaphragm or bellows is not adapted to withstand substantial pressure differentials across its walls.

It is an object of the invention to provide an improved positive displacement reciprocating pump in which the liquid being pumped is effectively separated from the intermediate liquid surge column and effectively sealed from the plunger stuffing box.

Another object of the invention is to provide an improved positive displacement reciprocating pump in which the liquid pumped is being maintained remote from the actuating plunger when the circumstances so require, e.g. in the pumping of radioactive liquids.

It is another object of the invention to provide a bellows-type pump for moving liquid, including means for balancing the pressure at all times across the bellows.

According to one embodiment of the invention, the bellows is separated from the plunger by a liquid actuating column i.e. a surge column for the transmitting of the reciprocation of the plunger to the bellows, causing the latter to reciprocate along with the plunger, the bellows also separating the liquid being pumped in the surge block from the liquid in the surge column.

Disposed hydraulically between the liquid to be pumped and the liquid surge column is the pressure equalizing arrangement which in the preferred embodiment includes a pressure balancing valve, a check valve and an accumulator reservoir, one side of the pressure balancing valve being in connection with the side of the liquid to be pumped while the other side of the valve is in connection with the surge column, consisting of an inert liquid, the check valve and the accumulator reservoir serving to replenish the inert liquid in the surge column.

In another embodiment a direct mechanical connection is provided between the plunger and a bellows type mechanical sealing member, one end of which is attached to the plunger, the other to the stuffing box housing.

Similarly to the first mentioned embodiment, the second embodiment also includes a pressure balancing mechanism connected to the device in a manner similar as in the previous embodiment for the inert liquid disposed at the side of the bellows opposite the side contacting the liquid to be pumped. Preferably, the plunger in this embodiment is formed with a shoulder so dimensioned as to maintain a pressure in the inert liquid surge column substantially equal to the pressure in the liquid being pumped and adapted to supplement the pressure equalizing function of the pressure balancing valve by providing additional pressure or suction, depending on the stroke of the plunger, to the plunger side of the pressure balancing valve.

Additional features and advantages of the invention will become apparent from the following detailed description and drawing, wherein:

FIG. 1 is a cross-sectional view of one embodiment of a pump according to the invention;

FIG. 2 is an enlarged scale showing of the bellows in FIG. 1;

FIG. 3 is an end elevational view taken along line 3—3 of FIG. 2;

FIG. 4 is a cross-sectional view of a somewhat different embodiment of the pump shown in FIG. 1;

FIG. 5 is an end elevational view taken along line 5—5 of FIG. 4; and

FIG. 6 is a cross-sectional view of another embodiment of the pump according to the invention.

Referring to FIGS. 1–3, a pump is shown having an inlet 1 and an outlet 2 where suitable unidirectional inlet valve means 4 and outlet valve means 6 are disposed in a surge block 8. The liquid to be pumped passes through the surge block 8. Attached to the surge block 8 is housing 10 with a stuffing box by means of e.g. a lens joint 12. In place of the lens joint 12 alternatively, other commercial type joints may be used, such as raised face, tongue and groove ring, joint, male and female and so on.

Bellows 14 made of flexible metal or other suitable material is firmly held in the joint 12 by a flange 16 forming part of the bellows 14. The end of the bellows 14 having the flange 16 thereon, is open, as shown in FIG. 3, except for spoke 18 which support a central guide part in the bellows, to be described later. The end of the bellows facing the surge block is closed off by means of a closure member 20. Disposed within the bellows and outside of the bellows at its end past the flange 16 is an inert liquid, constituting the surge column 22. The surge column 22 establishes the actuating coupling between a plunger 24 disposed at the end of the surge column 22 opposite the bellows 14. The plunger 24 is adapted to reciprocate within the stuffing box and housing 10 in the direction of the double headed arrow A, driven by a suitable outside driving mechanism (not shown). The plunger 24 may be provided with sealing rings 26 and/or a packing 28, establishing the seal between the stuffing box housing 10 and the plunger 24. The packing 28 is maintained as a compression seal by means of a packing gland 30 and gland bolts 32, pressing the packing gland 30 and the packing 28 into the sealing relationship.

A rod 34 (FIGURE 2) is attached at its one end to the closure member 20. A guiding sleeve 36 is threadedly fixed within the flange 16. The other end of the rod 34 projects through a central bore in the guiding sleeve 36 and a stop member 38 is attached to the free end of the rod 34. As the bellows expand or contract, the rod 34 can freely glide within the guiding sleeve 36. The length of the stroke of the bellows is adjusted by rotating the guiding sleeve 36 in the flange 16. For increased flexibility of adjustment in the stroke length if desired, the stop member 38 can be formed as an adjusting nut, adapted to engage a complementarily threaded portion of the rod 34. End 40 of the guide sleeve 36 disposed within the bellows is adapted to abut against the inner surface of the closure member 20 to restrict, if necessary, the contracting of the bellows to the desired length of stroke.

One side of a pressure balancing valve 42 is connected to an outlet 44 in the surge block 8 for the sensing of the pressure in the liquid to be pumped therein. Additional means 46 can be provided for relief valve to relieve excess pressure in the liquid in the surge block 8 in the case a dangerous pressure buildup may occur, e.g. if for some reason the discharge valve 6 from the surge block should be inadvertently closed while the pump is running. The other end of the pressure balancing valve

42 is connected to an outlet 48 in the stuffing box housing 10 in communication with the surge column liquid. In the preferred embodiment, the principal element of the pressure balancing valve 42 is a pressure balancing bellows 50. When the pressure is suitably balanced by the valve 42, minimum pressure differential exists between the inside and outside of the bellows 14. The connection 48 also establishes communication of the actuating liquid through a check valve 52 with an actuating liquid reservoir 54 to provide actuating liquid replenishment to the surge column 22 to maintain the proper volume of liquid therein. A venting valve 56 is provided on the actuating liquid side of the pressure balancing valve 42 so that if the pressure in the actuating column 22 for some reason would become too high, the excess liquid can be drained off through the venting valve 56. If desired, a connection can be established between the outlet of the venting valve 56 and the actuating liquid reservoir 54 to preserve the drained off liquid for reuse. The actuating liquid reservoir also aids in replenishing liquid lost from the actuating column 22 by possible leakage through the stuffing box packing 28. The actuating liquid reservoir 54 is pressurized preferably at approximately the suction pressure in the surge block 8. If the pressure of the actuating column drops below the pressure in the reservoir due to loss of inert liquid, the check valve 52 allows flow from the reservoir to the actuating column. During this inert liquid replenishing condition the venting valve 56 would be closed due to the pressure on the pressure balancing bellows 50 on the surge block side being higher.

The additional venting means 46 or relief valve is designed to relieve unusually high pressure within the surge block.

A spring 57 is provided with the pressure balancing bellows 50, forcing same to keep the venting valve 56 closed. The pressure of this spring, combined with the effective area of the pressure balancing bellows 50 gives the minimum pressure differential which is desired to be maintained across the bellows 14. In the case of general pumping applications this minimum pressure differential value would be preferably as low as possible. In the preferred mode of operation and under preferred balanced conditions, the bellows 14 will always stroke together with the plunger 24.

In one embodiment, e.g. the one shown in FIG. 1, if desired, a liner made from a suitable material can be provided within that portion of the surge block 8 in which the bellows 14 reciprocates, to hold the flange 16 of the bellows firmly against the housing 10. A cover 59 is provided for the surge block 8, the cover permitting removal of the liner from the surge block and also providing for the removal of the bellows through the block without unnecessary dismantling of the pump. The liner would, of course, be provided with suitable openings for the flow of liquid to be pumped through valves 4 and 6 in the surge block.

In FIGS. 4 and 5 an embodiment similar to the one discussed previously is shown, incorporating some modifications thereover. In FIG. 4 a spoolpiece 60 is shown interposed between the surge block 8 and the housing 10 with the stuffing box joined thereto, in the embodiment shown, by lens joints 62 and 64. The bellows 66 can alternatively be positioned either ranging into the surge block housing 10 from the joint 64 as in FIG. 1, or disposed within the spoolpiece 60 and maintained therein at the joint 62, as in FIG. 4. The cover 59 providing for the removal of the bellows 14, can be omitted if a spoolpiece is used for the disposition of the bellows.

In FIG. 4, optional cooling or heating means 68 is shown in the embodiment of a coil surrounding the spoolpiece 60. However, if desired and the temperature of liquid to be pumped would require, cooling or heating could be applied to any portion of the pump, stuffing box, surge column, or surge block.

Spoolpiece 60 allows for rapid disassembly in case that this may be necessary, providing for easy removal or replacement of the bellows. The inside diameter of the stuffing box housing 10, the spoolpiece 60 and the bore in the surge block 8 should preferably be as closely identical as possible so as to avoid significant changes of velocity in the actuating liquid during each stroke to avoid pressure impulses or harmonics in addition to the usual pulsations of a reciprocating pump. The equalizing of the dimensions also contributes to the bellows and the plunger stroking together in the desired relationship. The pressure of the liquid in the surge block can be taken off for purposes of pressure balancing either at the surge block housing 8, as shown in FIG. 1, or at the spoolpiece 60 as shown in FIG. 4 at 70.

As also shown in FIG. 5, sliding shoes 72 can be provided for the end plate of the bellows 66 to keep it within the desired central disposition within that part of the housing within which it is positioned to reciprocate. If sliding shoes 72 are used, preferably a liner, similar to the one shown at 58 in FIG. 1, can be employed if desirable upon which the shoes 72 ride back and forth.

In FIG. 6 another embodiment of the pump according to the invention is shown, wherein a composite plunger 74 is provided extending from a stuffing box housing 76 to a surge block 78. The liquid to be pumped within the surge block 78 is completely isolated from the stuffing box packing 80 by a bellows 82. In FIG. 6 the bellows is attached at its end facing the surge block 78 to the plunger 74 and to the stuffing box housing on the side facing the packing 78. If desired, the bellows 82 can be attached to the plunger 74 on the side facing the packing 80, depending on convenience. The space provided in the interior of the bellows of the pump shown in FIG. 6 is filled with an inert liquid which is provided to maintain pressure on the inner wall of the bellows, to balance the pressure of the liquid to be pumped on the outer side of the bellows 82. The inert liquid here, as in the other embodiments, may be water or some other suitable hydraulic fluid.

The principle of the embodiment shown in FIG. 6 can also be applied to piston pumps instead of plunger pumps, simply by adapting the same type of connection to a piston rod and the stuffing box housing instead of a plunger and the stuffing box housing.

In order to assure negligible differential pressure across the bellows walls, a balancing system similar to the one shown in FIG. 1 is indicated. The pressure of the liquid to be pumped is taken off at an outlet 84, while the connection to the inert liquid is made at an outlet 86.

The plunger 74 is shown to be formed with a shoulder 88, which maintains the pressure within the bellows in accordance with the pressure in the liquid being pumped and in accordance with the stroking of the pump, for negligible differential pressure inside and outside the bellows wall.

The pump can be built as a single unit or in duplex, triplex, or multiplex form including any necessary number of cylinders to obtain most economically the delivery and capacity desired. The surge block member can be formed of individual castings or forgings, one for each plunger, or alternatively can be a forging or casting of two or more pumps enblock. Suction and discharge manifolds can be formed integral with the forging or casting or can be provided as separate pieces to be bolted to the individual blocks.

While specific embodiments of the invention are shown, other pressure balancing and sealing arrangements could also be provided within the scope of the invention, therefore, the scope thereof is to be interpreted from the appended claims.

I claim:

1. A high pressure and large volume liquid displace-

ment pump comprising a housing having an elongated cylindrical chamber therein of substantially the same diameter throughout its length, bellows means secured to said housing for dividing said chamber into a first portion for containing an inert liquid on one side of said bellows means and into a second portion for containing the liquid to be pumped, a plunger reciprocable in said first portion for alternately raising and lowering the pressure of the inert liquid therein and effecting a corresponding alternate extension of the bellows means into and out of said second portion, fluid inlet and outlet means in communication with said second portion for passage of the liquid to be pumped therethrough; said bellows means including a substantially cylindrical bellows, a rigid end plate for said bellows having substantially the same effective area as the end area of said plunger, a guide rod secured at one end thereof to a central portion of said end plate in the interior of said bellows and extending internally along the longitudinal axis of said bellows, means cooperating with said guide rod for limiting the maximum extension of said bellows, and pressure limiting means responsive to the differential pressure between the liquids in said first and second portions of said chamber, said pressure limiting means including a casing, an auxiliary bellows secured at one end thereof within said casing and dividing it into a first part and a second part, the first part being in fluid communication with said chamber first portion, the second part being in fluid communication with said chamber second portion, a rigid closure plate attached to the other end of said auxiliary bellows, said first part including an aperture in the wall of said casing opposite said closure plate for venting motivating liquid from the first part, said closure plate including plug means in line with the aperture for controlling the venting of said first part through said aperture, and spring means for normally biasing said closure plate and the plug means thereon to seal the aperture, whereby upon an increase in the pressure of the motivating liquid in the first portion beyond a predetermined differential with the pressure in the second portion the plug means operates to vent excess motivating liquid through the aperture until a predetermined maximum value of differential pressure between said first and second portions is restored.

2. A liquid displacement pump according to claim 1, wherein said means cooperating with said guide rod for limiting the maximum extension of said bellows comprises means for attaching the free end of said guide rod to said plunger.

3. A high pressure and large volume liquid displacement pump comprising a housing having an elongated cylindrical chamber therein of substantially the same diameter throughout its length, bellows means secured to said housing for dividing said chamber into a first portion for containing an inert motivating liquid on one side of said bellows means and into a second portion for containing the liquid to be pumped, a plunger reciprocable in said first portion for alternately raising and lowering the pressure of the motivating liquid therein and effecting a corresponding alternate extension of the bellows means into and out of said second portion, fluid inlet and outlet means in communication with said second portion for passage of the liquid to be pumped therethrough; said bellows means including a substantially cylindrical bellows made of a metallic material, a rigid end plate for said bellows having substantially the same effective area as the end area of said plunger, a guide rod secured at one end thereof to a central portion of said end plate in the interior of said bellows and extending internally along the longitudinal axis of said bellows, support means extending transversely of said chamber for engaging and guiding

the free end of said guide rod as said end plate reciprocates with displacement of said plunger, adjustable stop means connected to the free end of said guide rod and cooperating with said support means for limiting the maximum extension of said bellows; and pressure limiting means responsive to the differential pressure between the liquids in said first and second portions of said chamber, said pressure limiting means including a casing, an auxiliary bellows secured at one end thereof within said casing and dividing it into a first part and a second part, the first part being in fluid communication with said chamber first portion, the second part being in fluid communication with said chamber second portion, a rigid closure plate attached to the other end of said auxiliary bellows, said first part including an aperture in the wall of said casing opposite said closure plate for venting motivating liquid from the first part, said closure plate including plug means in line with the aperture for controlling the venting of said first part through said aperture, and spring means for normally biasing said closure plate and the plug means thereon to seal the aperture, whereby upon an increase in the pressure of the motivating liquid in the first portion beyond a predetermined differential with the pressure in the second portion the plug means operates to vent excess motivating liquid through the aperture until a predetermined maximum value of differential pressure between said first and second portions is restored.

4. A liquid displacement pump according to claim 3, wherein said housing includes a first section in which substantially all of said chamber first portion is formed, and a second section in which substantially all of said chamber second portion is formed, means for securing said first and second sections to each other, and wherein said support means includes a circular flange attached at the periphery thereof to said housing between said first and second sections, said flange being formed with an opening therein for establishing fluid communication between said chamber first portion and the interior of said bellows, said flange further including and mounting adjustable means for limiting the minimum longitudinal dimension of said bellows.

5. A liquid displacement pump according to claim 4, wherein the end of said bellows opposite to the end carrying said end plate is attached to said flange, and said adjustable means comprises an externally threaded sleeve threaded into said flange substantially coaxially with the guide rod, said guide rod being adapted to slide within said sleeve during the reciprocations of said bellows, whereby said bellows with said flange forms a unitary subassembly for ease of replaceability of said bellows means in said housing.

6. A liquid displacement pump according to claim 4, further including an intermediate housing section attached to said housing between said first and second sections thereof for ease of accessibility to said bellows means.

7. A liquid displacement pump according to claim 3, wherein said housing further includes a stuffing box surrounding said plunger for sealing said inert liquid within the first portion of the chamber, and means for controlling the temperature of the vicinity of said bellows means.

References Cited in the file of this patent

UNITED STATES PATENTS

1,408,208	Jones	Feb. 28, 1922
1,627,257	Stevens	May 3, 1927
2,753,805	Boivinet	July 10, 1956

FOREIGN PATENTS

849,414	France	Nov. 23, 1939
470,734	Italy	Apr. 22, 1952