Jan. 30, 1968 H. TUTERT ET AL 3,366,214

CODE COMPARISON SYSTEM FOR SETTING A TYPE ROLLER

Filed Oct. 23, 1965 4 Sheets-Sheet 1

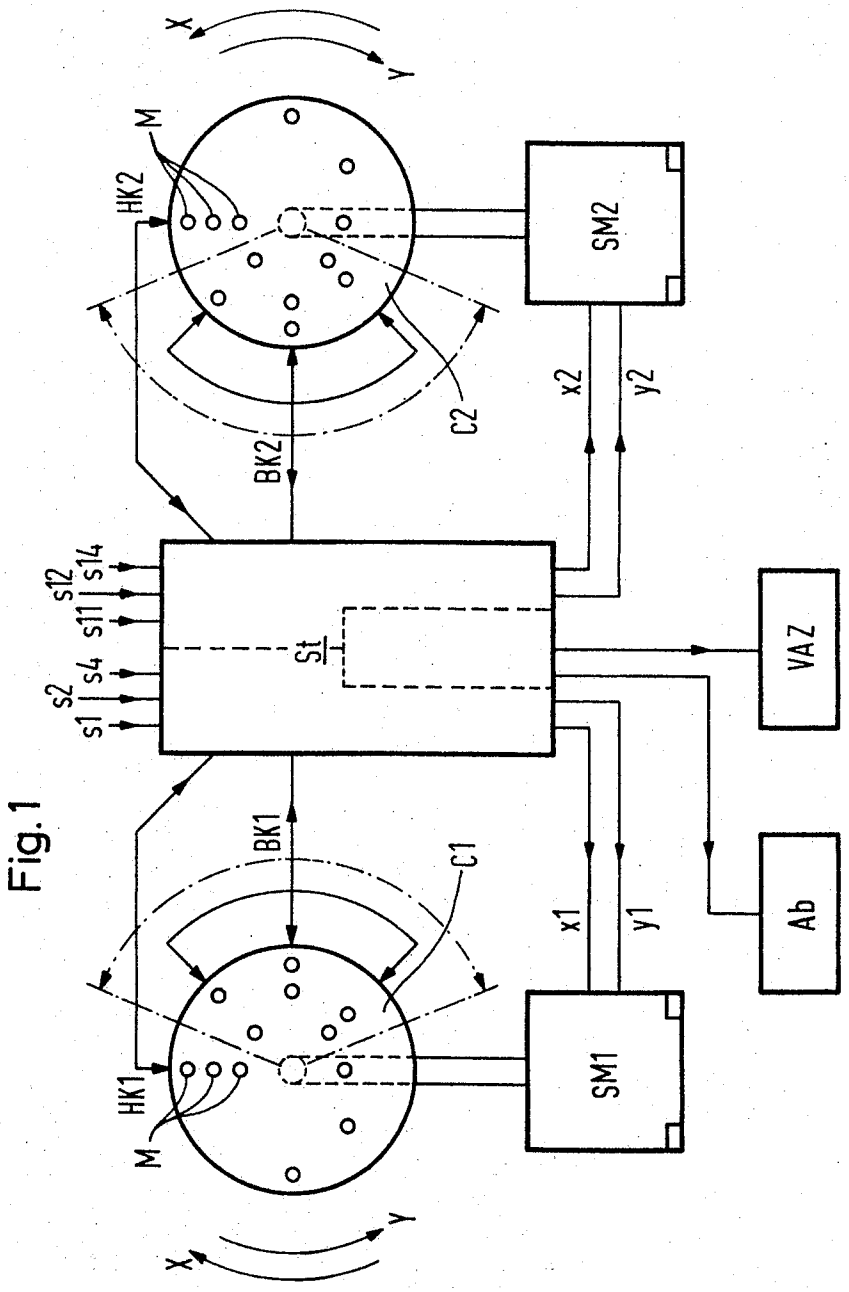

Fig. 1

INVENTORS

HERMAN TUTERT

SVEN VOELCKER

BY Fleit & Lee ATTORNEYS

Fig. 2

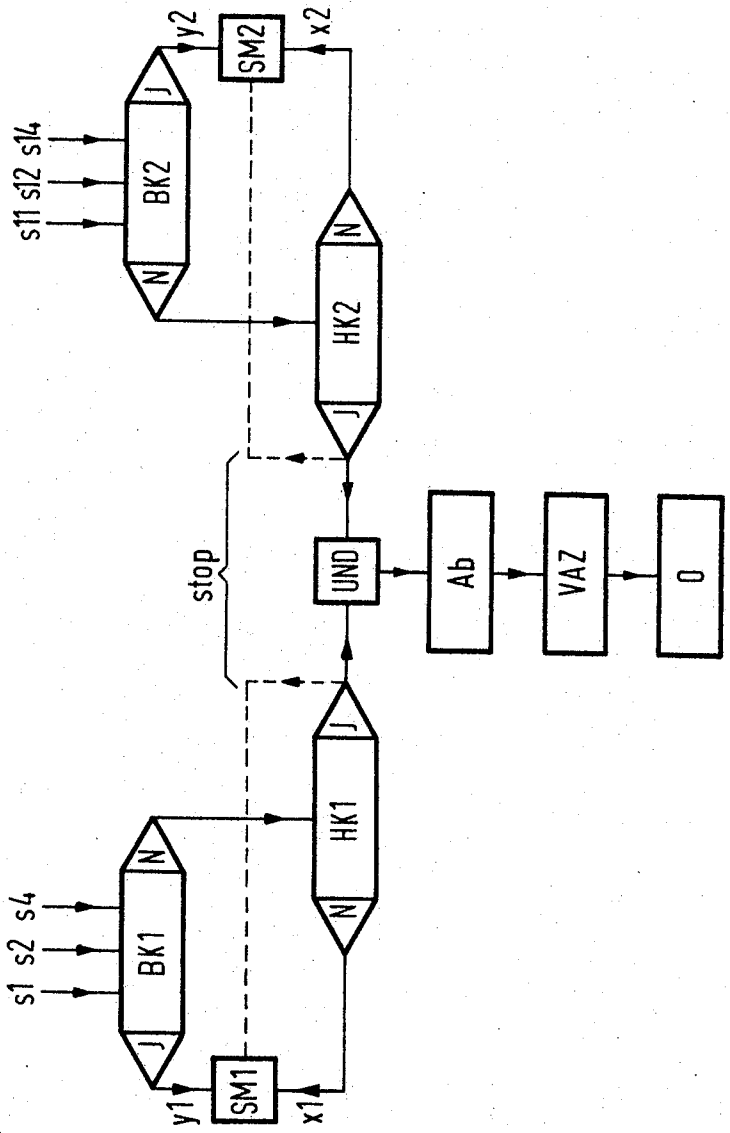

INVENTORS
HERMAN TUTERT
SVEN VOELCKER
BY Schiff Schiff ATTORNEYS

Jan. 30, 1968 H. TUTERT ET AL 3,366,214

CODE COMPARISON SYSTEM FOR SETTING A TYPE ROLLER

Filed Oct. 23, 1965 4 Sheets-Sheet 3

Fig. 3

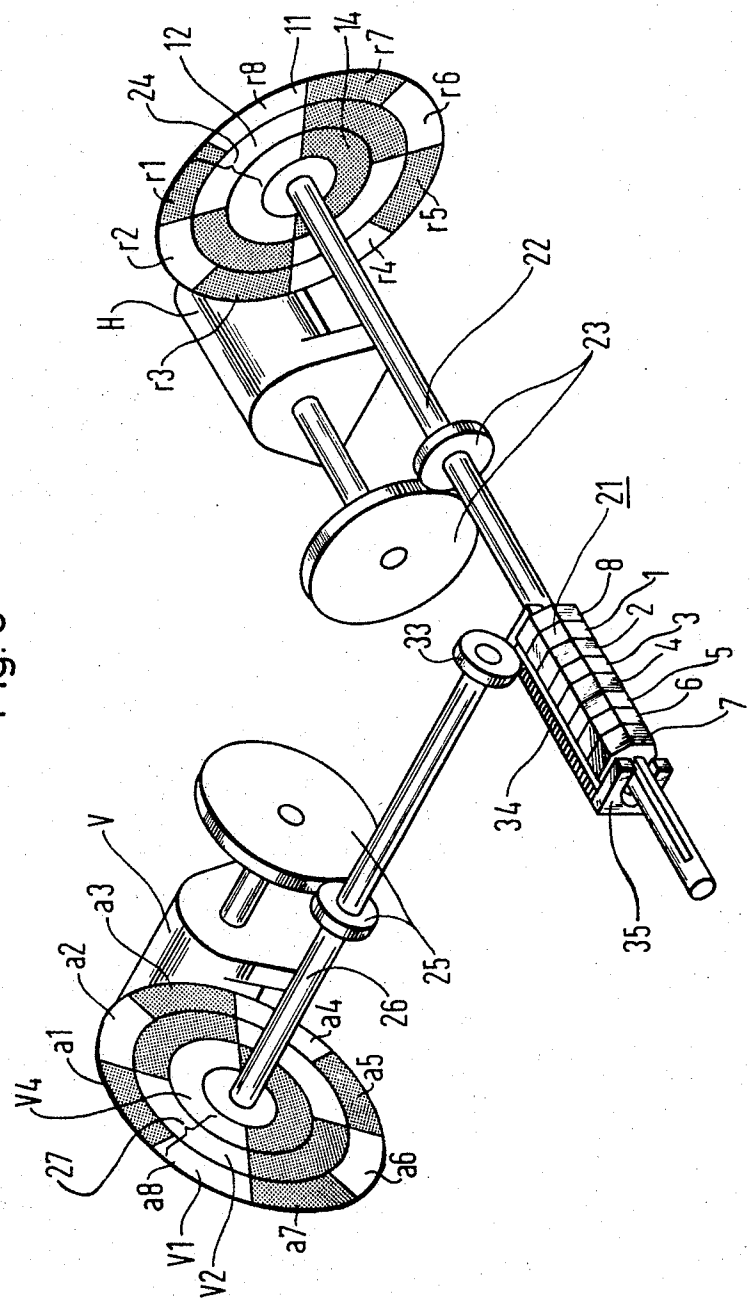

INVENTORS
HERMAN TUTERT
SVEN VOELCKER
BY Lee & Lee ATTORNEYS

Jan. 30, 1968 H. TUTERT ET AL 3,366,214

CODE COMPARISON SYSTEM FOR SETTING A TYPE ROLLER

Filed Oct. 23, 1965

4 Sheets-Sheet 4

Fig. 4

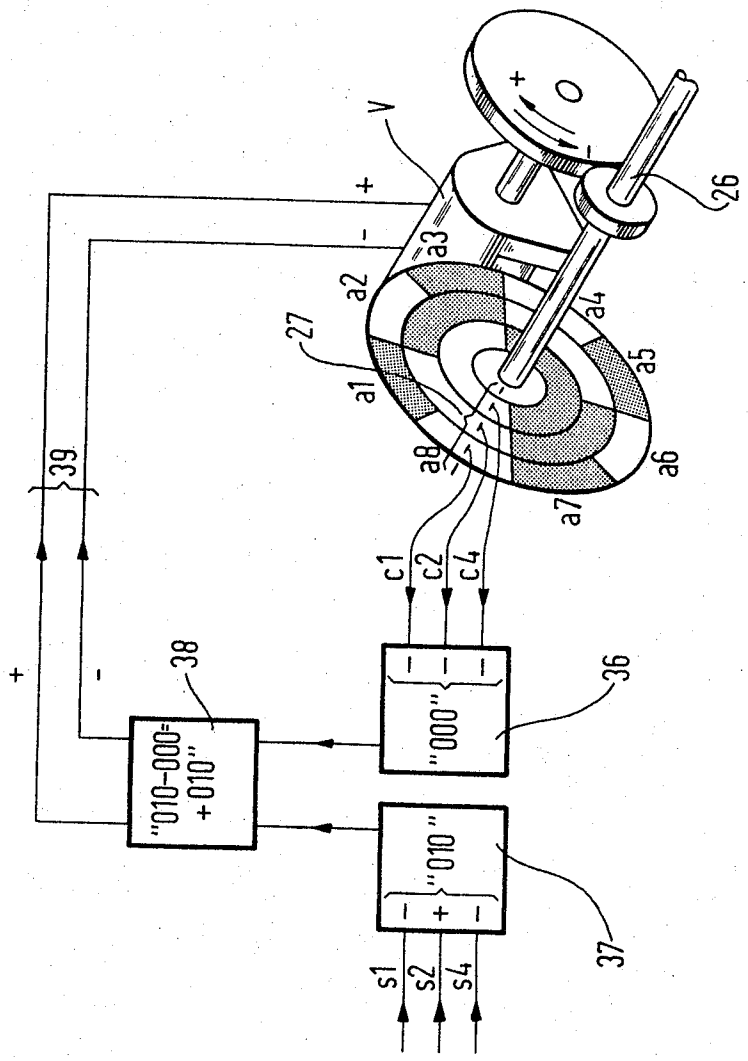

INVENTORS

HERMAN TUTERT

SVEN KOELCKER

BY Lee & Lee ATTORNEYS

United States Patent Office

3,366,214

Patented Jan. 30, 1968

3,366,214

CODE COMPARISON SYSTEM FOR SETTING A TYPE ROLLER

Herman Tutert and Sven Voelcker, Munich, Germany, assignors to Siemens Aktiengesellschaft, Munich, Germany, a corporation of Germany

Filed Oct. 23, 1965, Ser. No. 505,318
Claims priority, application Germany, Jan. 15, 1965, S 95,025
3 Claims. (Cl. 197—48)

ABSTRACT OF THE DISCLOSURE

A system for the setting of a type roller or similar type carrier, by means of a fully rotatable reversible step motor operatively connected thereto, from a first set position to a second new set position, in which a code comparison member is movable in accordance with the setting movement of the type carrier and has code means thereon corresponding to respective setting positions of said carrier, wherein means is operative to check range coincidence of said first and second positions with respect to approximately one half of such comparison member adjacent the first set position, further means, responsive to said range checking means upon a determination by the latter of range coincidence, operable to effect actuation of the motor for setting movement of said carrier in one direction, and responsive to a determination of an absence of such range coincidence, for effecting actuation of the motor for setting movement of the carrier in the other direction, whereby positioning of the carrier in the new set position is effected by the smallest possible movement of the comparison member, further means being responsible to coincidence of the actual carrier position with the new set position for effecting a discontinuance of said setting movement. Setting of such a roller type carrier in an axial direction may be effected by a gear and rack arrangement wherein values of binary number are assigned to the respective carrier positions, in which the direction of motor rotation takes place upon a comparison of the corresponding binary rollers in dependence upon the one value predominately.

The disclosure

The invention relates to a system for the setting of a type roller or of a similar type carrier according to two coordinates in dependence on code pulses, in which at least for the shifting in the one direction, for example, turning of the type carrier, there is provided an electrical step motor controllable by code pulses. Such type of system is disclosed in copending application Ser. No. 433,850 filed Feb. 19, 1965, now Patent No. 3,308,917, granted Mar. 3, 1967, hereinafter referred to as "the main patent." Such a motor has several windings in the stators each with one or more poles, and a single or multipoled stepwise advanceable rotor, possibly too, with only a single stator rotor winding and single poled rotor or stator, and the particular angular position of the rotor on excitation of one of the windings or certain poling of the possibly single or multiple windings is determined by the fact that the closest pole pair of the rotor is drawn into the magnetic cross axis of this winding or, in use of a poled rotor, it is directed into such axis.

According to the invention, the shifting path and thus the time of shifting are reduced by about one-half of the adjustment processes whereby, with the aid of a main coincidence testing device responsive to the respective position of a code comparison disk and of a testing device for the range coincidence, there can be utilized, in the absence of the main coincidence, approximately only

half of the code comparison disk for a forward or reverse movement of the allocated step motor, such half being adjacent to the working position so that on establishment of a range coincidence there is effected a shifting of the type carrier in one direction and on non-establishment of range coincidence a shifting of the type carrier in the opposite direction, which continues until main coincidence can be established.

In a system of the type mentioned with several step motors, according to a further development of the invention, means are provided to bring about the type character printing in each case after establishment of main coincidence in all individual setting devices.

In the example of construction illustrated in the main patent, the longitudinal displacement of the type roller takes place over a heart-shaped cam, in which arrangement, for the purpose of uniform distribution of the rotary movement from step to step and for the improvement of the transformation of the rotary movement into the longitudinal movement, the type rows on the roller are not disposed in the same sequence as the allocated radial code comparison fields on the code comparison disk. This is expediently to be taken into consideration in the code distribution. A more logical axial code distribution is achievable according to a further development of the invention through an arrangement in which the shaft of such code disk is not fully rotatable, whereby only the step motor effecting the rotation of the type roller is fully rotatable. The disk, together with the setting gearing, is arranged for forward and reverse control with the aid of the range coincidence checking, while for the axial displacement there is provided a gear rack shiftable over a gear rigidly coupled with the appertaining code comparison disk and drivable by the second step motor. Further, to each axial roller displacement a value is allocated of the binary numbers following successively in the number series and corresponding sequence of type rows and code comparison disk positions, with the direction of rotation of the motor being determined by comparison of the allocated binary values of the momentary position and the desired position whereby rotation toward the desired position takes place in the one direction upon predominance of the one value, and in the other direction upon predominance of the other value.

Further details of the invention will appear from the examples of construction described in the following and illustrated in the drawings, in which:

FIG. 1 is a block circuit diagram of a control and setting device for a type roller by six-element code signals over two fully rotatable step motors with selectable direction of rotation;

FIG. 2 is a flow diagram for the arrangement of FIG. 1;

FIG. 3 is a perspective view of a setting gear with a fully rotatable step motor and a partially rotatable step motor; and

FIG. 4 illustrates a control circuit for the partially rotatable step motor illustrated in FIG. 3.

The control system according to FIG. 1 is suitable for a setting system for type rollers by six-element code signals over two fully rotatable step motors, such as is explained, for example, in the main patent as an example of construction. The setting gear coupled with the step motor there corresponds exactly to that for the radial setting according to FIG. 3. In this system a code comparison disk C1 is rigidly coupled with a step motor SM1 and a code comparison disk C2 is similarly coupled with a step motor SM2, over respective reduction gearing (not shown in drawing). It is assumed that the code comparison disks occupy only eight different angular positions. At the desired position corresponding to the printing position there must exist, as a prerequisite of a standstill or

stopping of the appertaining step motor, coincidence between the desired and the momentary position hereinafter designated as main coincidence HK1 and HK2, respectively. In a displacement of the code comparison disks and thereby of the type roller according to the main patent in only one direction, with n angular positions maximally $n-1$ angle steps are necessary to reach the desired position. If rotation in directions is provided for the setting, then with the aid of the auxiliary means explained in the following the number of setting steps can be reduced to maximally $n/2$. The printing performance of the whole system can then be raised, with the same step speed, by the factor $(2-2n)$, i.e. with $n=8$ by the factor 1.75. For this purpose, with one additional range coincidence comparison device BK1 and BK2, respectively, a check is made for coincidence between a momentary position and a range covering approximately half of the code comparison disk C1 and C2 on the range adjoining the working position. If the actual position of the markings M corresponding to the fed-in code lies on the code comparison disk within the scope of the testing for range coincidence by the scanning members, there then takes place, in the one case, a rotation direction Y, and in the other case in direction X, brought about through an electrical control circuit St over control lines *x*1, *y*1, or *x*2, *y*2. Upon a determination of main coincidence at both code comparison disks there takes place printing A*b* and, possibly, advance VAZ for the recording carrier.

In the flow diagram of FIG. 2 the code comparison results "yes" are designated with "J" and the results "no" with "N." In the case of main coincidence in the individual systems the control of the allocated step motor is prevented over the line "stop." For example, it may be blocked by a gate (not shown in drawing), as no displacement of the type roller by the particular step motor is necessary. If both code comparison disks have main coincidence (therefore desired position), printing is then initiated over the gate designated as UND.

In the control circuit, upon the initiating of the printing command, the resetting of the preferably electronic comparison system into the zero position by delivery of a command "O" immediately takes place.

The setting gear according to FIG. 3 is intended for the printer of a teletypewriter, which is usable, for example, in a teletype installation according to the six-element code, as a receiving mechanism. The setting system is constructed as follows: A type roller **21** is supported on a shaft **22** in fixed rotative relation, but longitudinally displaceable. The type roller comprises eight octagonal type wheels arranged axially in succession, and therefore, carries a total of 64 type symbols. The tangential displacement of the type roller is accomplished through a step motor H over reduction gearing **23** operating with a reduction ratio 20:8. On the shaft **22** there is provided, further, a code comparison disk **24** with concentric contact rings **11, 12, 14**, from which there are formed eight radial comparison fields *r*1 to *r*8. In similar manner, for the axial displacement of the type roller **21**, a step motor V drives a shaft **26** over reduction gearing **25**, on which shaft is mounted a code comparison disk **27** with concentric contact rings V1, V2, V4, and fields *a*1 to *a*8 formed therefrom. The longitudinal displacement of the type roller **21** on the shaft **22** is effected by means of a gear wheel **33** on the shaft **26** and a gear rack **34**, which forms the upper edge of a member **35** and between the end portions of which the type roller **21** is disposed, and in a manner not illustrated, is suitably slidably guided along the shaft **22**.

While the rotation of the type roller **21**, in the manner apparent from FIGS. 1 and 2 and the corresponding description and then effected by means of the fully rotatable and reversible step motor V, the shaft **26** due to the directly drivable gear rack **34**, is not fully rotatable. In order to operate, as a rule, with a minimum of displacement steps, the code comparison disk **27** is equipped with

fields in the sequence *a*8, *a*1, *a*2, *a*3, *a*4, *a*5, *a*6, *a*7, in which the following correspond to one another:

Code field	Binary number	Type roller row
a8	000	8
a1	001	1
a2	010	2
a3	011	3
a4	100	4
a5	101	5
a6	110	6
a7	111	7

The momentary position of the code comparison disk **27** is scanned over lines *c*1, *ca*, *c*4 along a radial beam and fed to a binary value adder **36**. The desired setting values are likewise given as binary values over lines *s*1, *s*4 to an adder **37**. The result of the adder **36** is subtracted in a comparator **38** from that of the adder **37** (for example 010—000=+010). Accordingly, as this result is positive or negative, the step motor V is fed either over the line **39** marked with PLUS or that marked with MINUS, whereby the step motor V is rotated in the one direction or the other, until the type roller **21** has reached its axial desired position. In this desired ultimate position the sign (plus or minus) is undeterminable and accordingly the motor stops. In the event possible overrunning of the desired position, the sign is reversed by reason of the addition and comparison result, the motor reverses to return the disk into the desired position.

The advantage of shorter setting times can also be improved by axially subdividing the roller according to the code as to "letters" and "digits with symbols." In this case an axial shifting of the roller from one half into the other is necessary only infrequently. In general the writing is done within one half of the roller (maximally 3 steps displacement).

Changes may be made within the scope and spirit of the appended claims which define what is believed to be new and desired to have protected by Letters Patent.

We claim as our invention:

1. A system for the setting of a type roller or similar type carrier, by means of a fully rotatable reversible step motor operatively connected thereto, from a first set position to a second new set position, comprising a code comparison member, movable in accordance with setting movement of the type carrier, having a code means thereon which correspond to respective setting positions of said carrier, means for checking range coincidence of said first and second positions with respect to approximately one half of such comparison member adjacent the first set position, means responsive to said range checking means upon a determination by the latter of range coincidence for effecting actuation of said motor for setting movement of said carrier in one direction, and responsive to a determination of an absence of range coincidence, for effecting actuation of said motor for setting movement of said carrier in the other direction, positioning of said carrier in the new set position is effected by the smallest possible movement of said comparison member, and means responsive to coincidence of the actual carrier position with the new set position for effecting a discontinuance of said setting movement.

2. A system wherein the type carrier is moveable in two coordinate directions, each movement being effected by respective setting systems at least one of which is according to claim **1**, comprising in further combination, means operative following coincidence between actual and desired new positions in both of such setting systems for effecting the type character printing.

3. A system according to claim **2**, wherein said type carrier is in the form of a type roller, the movement of which is effected in one of said coordinate directions by rotation of the type roller, and in the other coordinate direction by axial movement of such roller, with each

step motor being operatively connected to the type roller by respective setting gearing, in which only the step motor determinative for the rotation of the type roller is fully rotatable and is equipped for forward and reverse control by means of range coincidence checking, comprising in further combination a slideable gear rack drivable over a gear wheel rigidly coupled with an appertaining code comparison member in the form of a disk and drivable by the second step motor through the associated setting gearing, said comparison disk having associated with the code means thereof respective values of binary numbers successively following in the number series and corresponding sequence of type rows and code comparison disk positions, means for comparing the respective binary values of the actual position and the desired new position,

and means responsive to the comparison results operative to effect actuation of the associated step motor for rotation in one direction when one value predominates, and in the other direction when the other value predominates.

References Cited

UNITED STATES PATENTS

2,727,944	12/1955	Howard	178—35
2,757,775	8/1956	Hickerson	197—49
2,949,846	8/1960	Hoffman et al.	101—93
3,042,174	7/1962	Howard	197—55 X
3,168,182	2/1965	Bernard et al.	101—93 X
3,256,969	6/1966	Bretti	197—49

WILLIAM B. PENN, *Primary Examiner.*